Jan. 13, 1942. P. BIEDERMAN 2,269,511

PREFORMED SHOW-KERCHIEF

Filed Sept. 24, 1940

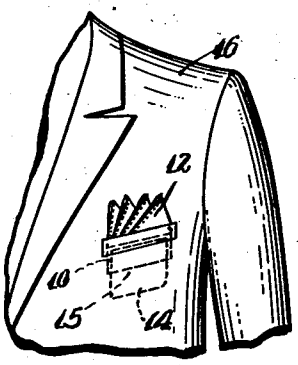

Fig. 1.

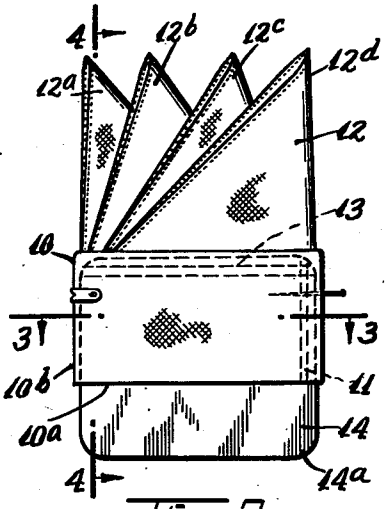

Fig. 2.

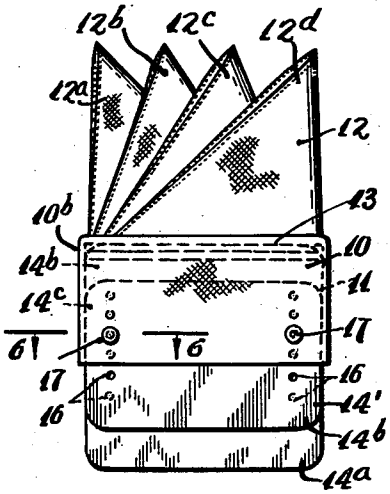

Fig. 5.

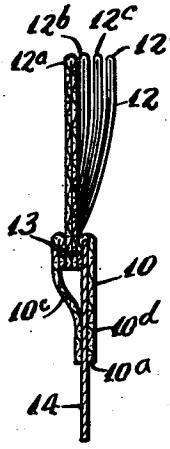

Fig. 4.

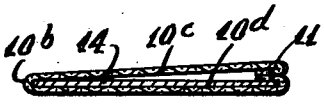

Fig. 3.

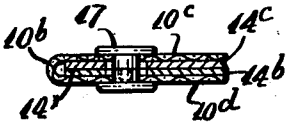

Fig. 6.

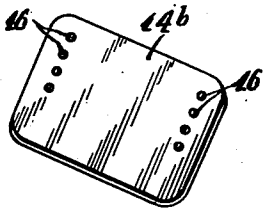

Fig. 7.

INVENTOR
Peter Biederman
BY Julian A. Polachek
ATTORNEY

Patented Jan. 13, 1942

2,269,511

UNITED STATES PATENT OFFICE

2,269,511

PREFORMED SHOW-KERCHIEF

Peter Biederman, Brooklyn, N. Y.

Application September 24, 1940, Serial No. 358,082

6 Claims. (Cl. 35—56)

This invention relates to new and useful improvements in a preformed show-kerchief.

The invention proposes the construction of an article as mentioned which is characterized by a flat, sheet material pocket having its mouth opening at the bottom, a preformed kerchief mounted on the top portion of said pocket and extending upwards, and a novel arrangement for supporting the pocket in the breast pocket of a jacket, or other suitable garment. The show-kerchief is particularly intended for displays of garments.

Another object of the invention resides in the provision of a rigid support engaged in the pocket previously mentioned and extending downwards from the mouth thereof and adapted to engage in the breast pocket of a jacket for supporting the show-kerchief.-

Still further the invention proposes a modified arrangement in which the support is adjustable so that the show-kerchief may be supported at various heights in the pocket of the jacket.

Another object of the invention resides in the construction of an article as mentioned which is simple and durable and which may be manufactured and sold at a reasonable cost.

For further comprehension of the invention, and of the objects and advantages thereof, reference will be had to the following description and accompanying drawing, and to the appended claims in which the various novel features of the invention are more particularly set forth.

In the accompanying drawing forming a material part of this disclosure:

Fig. 1 is a fragmentary elevational view of a jacket provided with a preformed show-kerchief constructed in accordance with this invention.

Fig. 2 is an elevational view of the preformed show-kerchief, illustrated per se.

Fig. 3 is a horizontal sectional view taken on the line 3—3 of Fig. 2.

Fig. 4 is a vertical sectional view taken on the line 4—4 of Fig. 2.

Fig. 5 is an elevational view of a preformed show-kerchief constructed in accordance with a modified form of this invention.

Fig. 6 is a fragmentary enlarged horizontal sectional view taken on the line 6—6 of Fig. 5.

Fig. 7 is a perspective view of one of the rigid sheets shown in Figs. 5 and 6.

The preformed show-kerchief in accordance with this invention includes a flat sheet material pocket 10 having its mouth opening 10ª at the bottom. This pocket is formed from a sheet of cloth material which is bent at a vertical central area along the side 10ᵇ so that there are adjacent layers 10ᶜ and 10ᵈ. These layers are secured together at their free sides with stitches 11. A preformed kerchief 12 is mounted on the top portion of the said pocket 10 and extends upwards. This kerchief is formed from several pieces of cloth 12ª, 12ᵇ, 12ᶜ and 12ᵈ folded to have pointed portions extended upwards and their edges are preferably hand rolled, hemmed or hemstitched, or rolled and embroidered to produce a neat finish. This preformed kerchief has its bottom edge portions extended into the top of the pocket 10 and fixedly secured in position by a line of stitches 13.

A rigid support 14 is engaged into the pocket 10 and extends downwards from the mouth 10ª thereof. This support comprises a sheet of cardboard, or other similar rigid material. Preferably the corners 14ª are rounded. This support board may be held in the material pocket 10, at any set position by a clip fastener or pin as shown, or by any other means.

The preformed show-kerchief is adapted to engage into the breast pocket 15 of a jacket 16 or other similar garment. The rigid support 14 engages into the bottom of the pocket and supports the preformed kerchief 12 at a suitable elevation, so that the pointed portions thereof project from the pocket.

In Figs. 5 and 7 inclusive, a modified form of the invention has been disclosed which distinguishes from the prior form in the fact that means is provided for holding the preformed kerchief at various elevated positions in the pocket of the jacket. The preformed kerchief distinguishes from the prior form merely in the details of the rigid support 14'. This rigid support is formed from a pair of adjacent rigid sheets 14ᵇ and 14ᶜ. These sheets are provided with a plurality of apertures 16 arranged in vertical lines. These apertures preferably are equally spaced from each other.

Means is provided for holding the pair of rigid sheets 14ᵇ and 14ᶜ in relatively extended positions, and includes snap fasteners 17 or other fastening elements mounted upon the pocket 10 and cooperative through aligned openings 16. The fasteners 17 are mounted upon the front and rear walls 10ᶜ and 10ᵈ of the pocket 10. The sections of the fasteners may be engaged with each other as illustrated in Fig. 6 to hold the rigid sheets 14ᵇ and 14ᶜ in

relative positions. When desired, the sections of the fasteners 17 may be pulled apart and then the sheets 14b and 14c are free and may be shifted upwards or downwards relative to each other. They may be secured in new positions by engaging the fasteners 17 through aligned apertures 16 of said sheets.

In other respects this form of the invention is identical to the prior form and like parts may be recognized by like reference numerals.

This form of the invention is used in the identical way as the prior described form. However, if it is desired to have the preformed kerchief extended further upwards, or downwards in the jacket pocket, it is merely necessary to adjust the adjacent rigid sheets 14b and 14c relative to each other.

While I have illustrated and described the preferred embodiments of my invention, it is to be understood that I do not limit myself to the precise constructions herein disclosed and the right is reserved to all changes and modifications coming within the scope of the invention as defined in the appended claims.

Having thus described my invention, what I claim as new, and desire to secure by United States Letters Patent is:

1. A preformed show-kerchief, comprising a flat sheet material pocket having its mouth opening at the bottom, a preformed kerchief mounted on the top portion of said pocket and extending upwards, a rigid support engaged into said pocket and extending downwards from the mouth thereof, said rigid support comprising a pair of adjacent rigid sheets, and means for holding said pair of rigid sheets in various relatively extended positions.

2. A preformed show-kerchief, comprising a flat sheet material pocket having its mouth opening at the bottom, a preformed kerchief mounted on the top portion of said pocket and extending upwards, a rigid support engaged into said pocket and extending downwards from the mouth thereof, said rigid support comprising a pair of adjacent rigid sheets, and means for holding said pair of rigid sheets in various relatively extended positions, comprising fasteners mounted upon said pocket and engaging certain of a plurality of apertures formed in said rigid sheets.

3. A preformed show-kerchief, comprising a flat sheet material pocket having its mouth opening at the bottom, a preformed kerchief mounted on the top portion of said pocket and extending upwards, a rigid support engaged into said pocket and extending downwards from the mouth thereof, said rigid support comprising a pair of adjacent rigid sheets, and means for holding said pair of rigid sheets in various relatively extended positions, comprising fasteners mounted upon said pocket and engaging certain of a plurality of apertures formed in said rigid sheets, said apertures being equally spaced from each other so that certain of the apertures of the adjacent sheet may be aligned with each other and then said fasteners may engage through the aligned apertures to hold the sheets as mentioned.

4. A device of the class described, comprising a flat fabric material pocket having a bottom mouth opening, a preformed kerchief mounted on the top edge of said pocket and extended upwards, and a cardboard support removably engaged into said pocket and extended downwards from said mouth opening, whereby said cardboard support may be completely removed from said pocket so that said pocket and kerchief may be laundered independently of said support.

5. A device of the class described, comprising a flat fabric material pocket having a bottom mouth opening, a preformed kerchief mounted on the top edge of said pocket and extended upwards, and a cardboard support removably engaged into said pocket and extended downwards from said mouth opening, whereby said cardboard support may be completely removed from said pocket so that said pocket and kerchief may be laundered independently of said support, and means for holding said kerchief in various elevated positions with reference to the cardboard support.

6. A device of the class described, comprising a flat fabric material pocket having a bottom mouth opening, a preformed kerchief mounted on the top edge of said pocket and extended upwards, and a cardboard support removably engaged into said pocket and extended downwards from said mouth opening, whereby said cardboard support may be completely removed from said pocket so that said pocket and kerchief may be laundered independently of said support, and means for holding said kerchief in various elevated positions, comprising a second cardboard support member also engageable into said pocket through said bottom mouth opening, said cardboard support members being formed with alignable openings, and complementary snap fastener elements mounted on opposite walls of said pocket and selectively engageable through certain of said openings for holding said cardboard support members in various relative extended positions.

PETER BIEDERMAN.