H. L. FERRIS.

STALL CONSTRUCTION.

APPLICATION FILED MAR. 15, 1912.

1,068,753. Patented July 29, 1913.

Fig. 1.

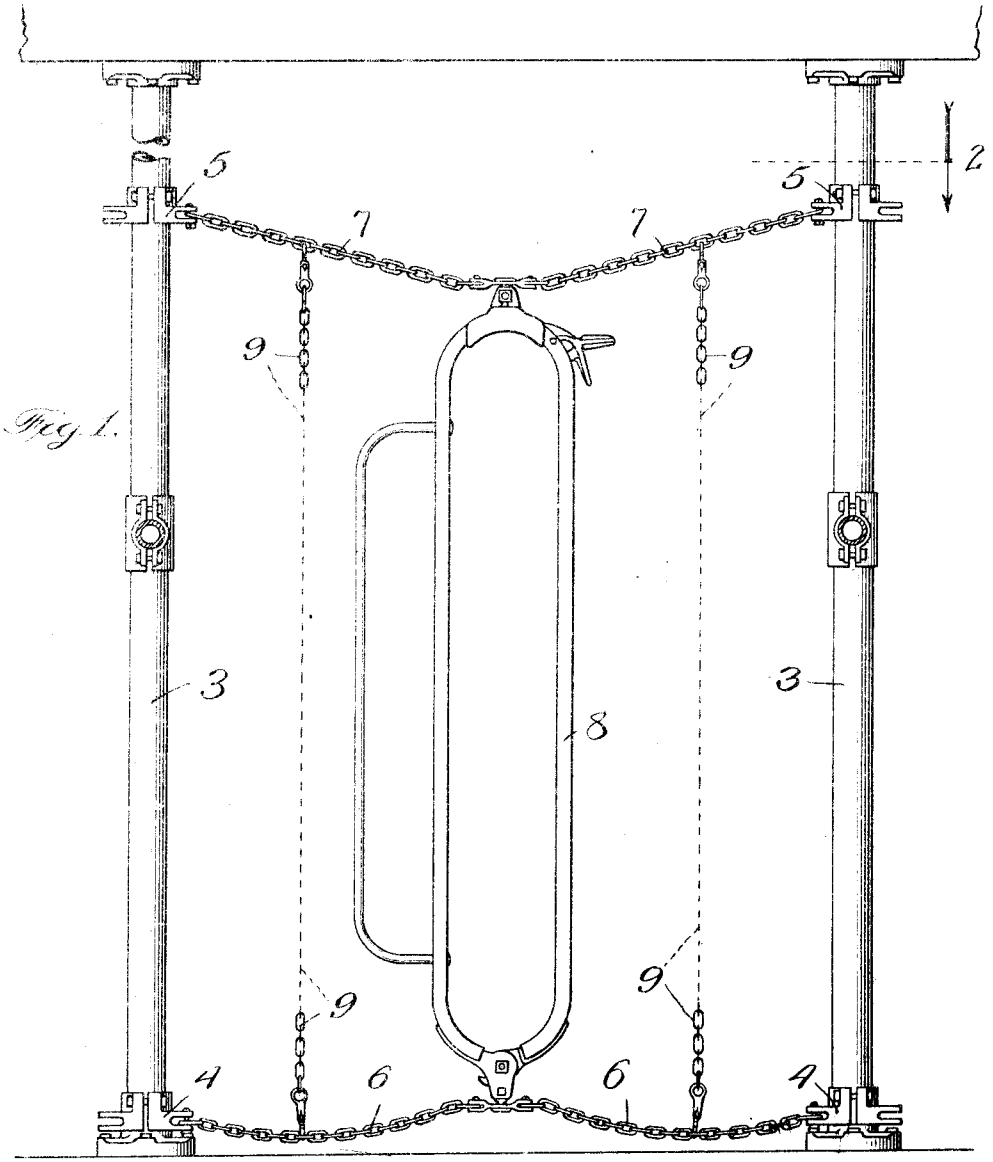

Fig. 2.

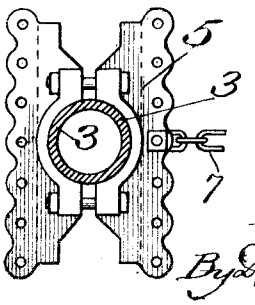

Witnesses:
Chas. H. Bull

Inventor:
Henry L. Ferris,
By Dyrenforth Lee, Christy & Wiles,
Attys.

UNITED STATES PATENT OFFICE.

HENRY L. FERRIS, OF HARVARD, ILLINOIS, ASSIGNOR TO HUNT, HELM, FERRIS & COMPANY, OF HARVARD, ILLINOIS, A CORPORATION OF ILLINOIS.

STALL CONSTRUCTION.

1,068,753. Specification of Letters Patent. Patented July 29, 1913.

Application filed March 15, 1912. Serial No. 683,996.

To all whom it may concern:

Be it known that I, HENRY L. FERRIS, a citizen of the United States, residing at Harvard, in the county of McHenry and State of Illinois, have invented a new and useful Improvement in Stall Construction, of which the following is a specification.

My invention relates to certain new and useful improvements in stall construction, and is fully described and explained in the specification and shown in the accompanying drawing, in which—

Figure 1 is an elevation of a stall-end embodying my invention, and Fig. 2 is a section on the line 2 of Fig. 1.

Referring to the drawings, 3, 3 are uprights on the edge or line of the stall-ends. These uprights may be, as far as the present invention is concerned of any construction desired. Mounted upon these uprights are adjusting brackets 4 and 5 at bottom and top, respectively, said brackets having each two parallel longitudinally extending flanges provided with perforations through which suitable pins or bolts can be placed. The adjusting brackets 4 are connected by a chain 6, the brackets 5 by a chain 7, and between chains 6 and 7 is a stanchion 8 which is preferably pivotally supported. Additional chains 9 extend vertically between the chains 6 and 7 to the two sides of the stanchion for the purpose of obstructing the passage between the stanchion and uprights 3, so that when the stanchion is open there is only one opening of sufficient size to receive the animal's head. Rigid bars might be substituted for one or both of these chains 9, or one only might be used. The entire stall-end formed by this chain-arrangement and with the stanchion therein can be adjusted longitudinally of the stall through the medium of the various perforations in the flanges of the adjusting brackets in an obvious manner.

It has heretofore been proposed to support stanchions upon chains, so as to permit a certain longitudinal flexibility to the end that within a predetermined limit the animal may move longitudinally of the stall. This free movement is particularly desirable as it enables the animal, in lying down and arising, to move the stanchion somewhat without undue pressure. In this proposed arrangement, however, the practice has been to place a rigid cross-bar transversely of the stall at the top and another at the bottom and to connect the stanchions therewith by vertical chains. The result of this construction is that the animal can move the stanchion sidewise to just as great an extent as longitudinally, so that to a large extent at least the whole function of the stanchion is lost. With the present method of construction where the chains run transversely of the stall, a very slight amount of slack will permit a considerable movement of the stanchion longitudinally of the stall, and but a slight transverse movement. The reasons for this greater longitudinal movement are, of course, obvious, but the construction provided is exceedingly desirable, because as far as lateral movement is concerned the stanchion is almost as rigid as if given a rigid support while it can move longitudinally several inches very readily. As another point it may be noted that the vertical chains 9 are preferably secured in place by snap-hooks so that after the animal is secured in place and the stanchion closed, one or both of these chains may be removed to clear a passage for any desired or convenient purpose.

I am aware that considerable variations are possible in the details of this construction without departing from the spirit of the invention, and I therefore do not intend to limit myself to the preferred form which is herein shown and described, except as pointed out in the following claims in which it is my intention to set forth all the novelty inherent in the device as broadly as is permitted by the state of the art.

I claim as new and desire to secure by Letters Patent—

1. In combination a stall frame comprising end members, transverse flexible members extending across the stall and having their ends so connected to said end members as to prevent vertical movement of said ends but to permit longitudinal adjustment thereof, and a stanchion connected at its ends to the central portion of said transversely-extending flexible members, whereby a limited transverse movement and a relatively great longitudinal movement of said stanchion is permitted, for the purpose set forth.

2. In combination transversely-extending flexible members, a vertical stanchion con-

necting central points thereof, and vertical flexible members at the two sides of the stanchion connecting the first-named flexible members.

3. In combination transversely-extending flexible members, a vertical stanchion connecting central points thereof, vertical flexible members for the two sides of the stanchion connecting the first-named flexible members, and means for detaching said last-named vertical flexible members when desired.

4. In combination transversely-extending flexible members, a vertical stanchion connecting central points thereof, and vertical members at the two sides of the stanchion connecting the flexible members.

5. In combination transversely-extending flexible members, a vertical stanchion connecting central points thereof, and a vertical member at one side of the stanchion and connecting said flexible members.

In testimony whereof I have hereunto set my hand this 11th day of March, 1912.

HENRY L. FERRIS.

In the presence of two subscribing witnesses:

D. L. MATTS,
R. L. HEMENWAY.