April 13, 1948. C. SCHIFFL 2,439,491

ENCLOSED ELECTROPLATING TANK

Filed June 2, 1942 2 Sheets-Sheet 1

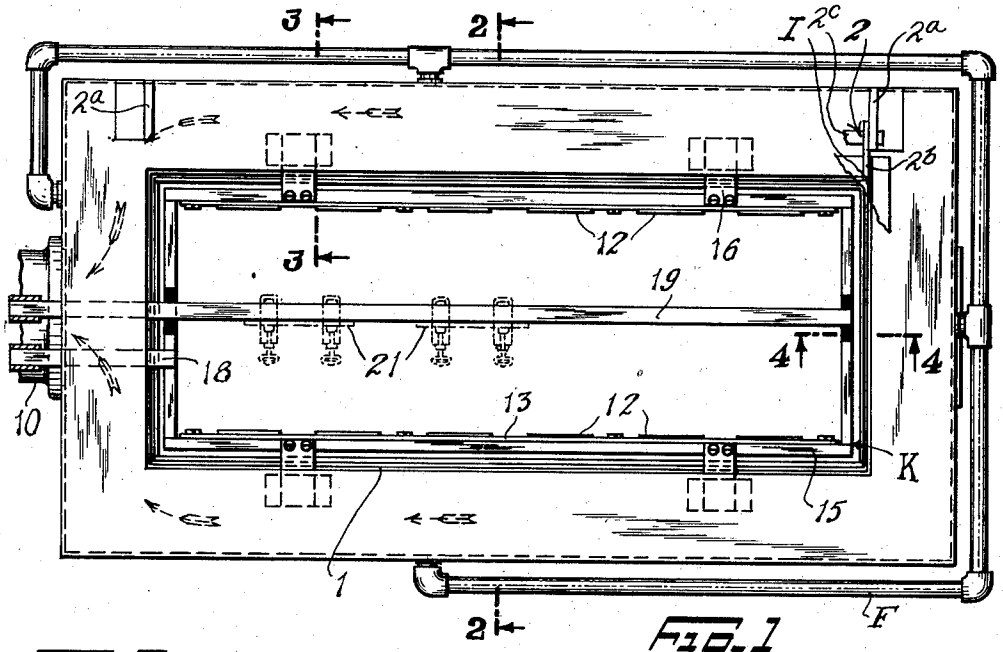

Fig. 1

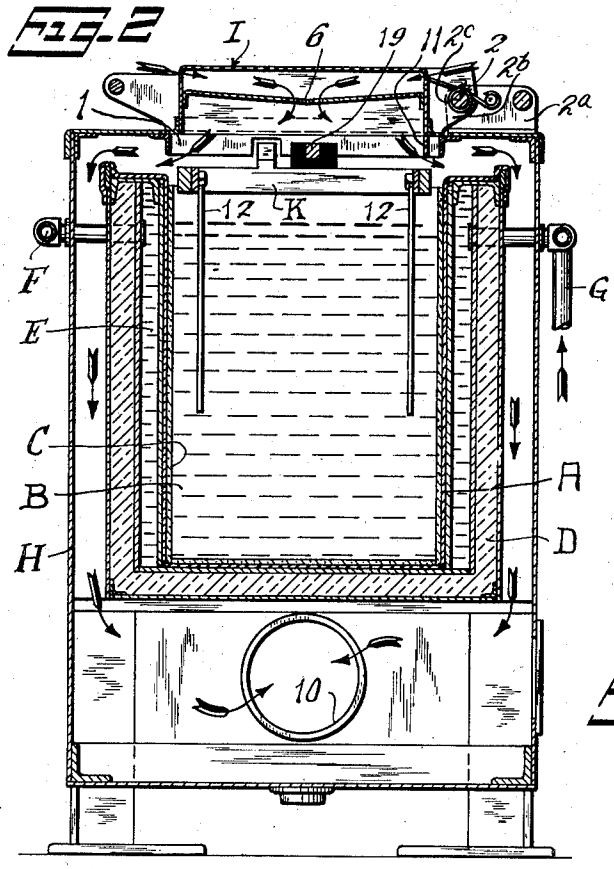

Fig. 2

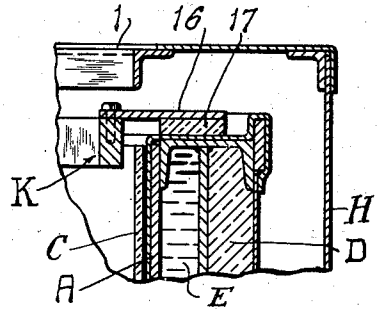

Fig. 3

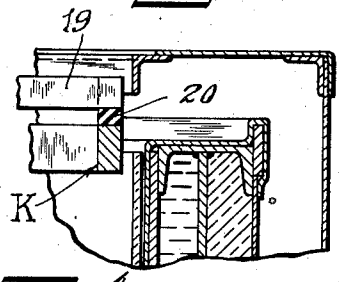

Fig. 4

INVENTOR.
Charles Schiffl.

BY

Harry N. Cook,

ATTORNEY

April 13, 1948. C. SCHIFFL 2,439,491

ENCLOSED ELECTROPLATING TANK

Filed June 2, 1942 2 Sheets-Sheet 2

Fig. 5

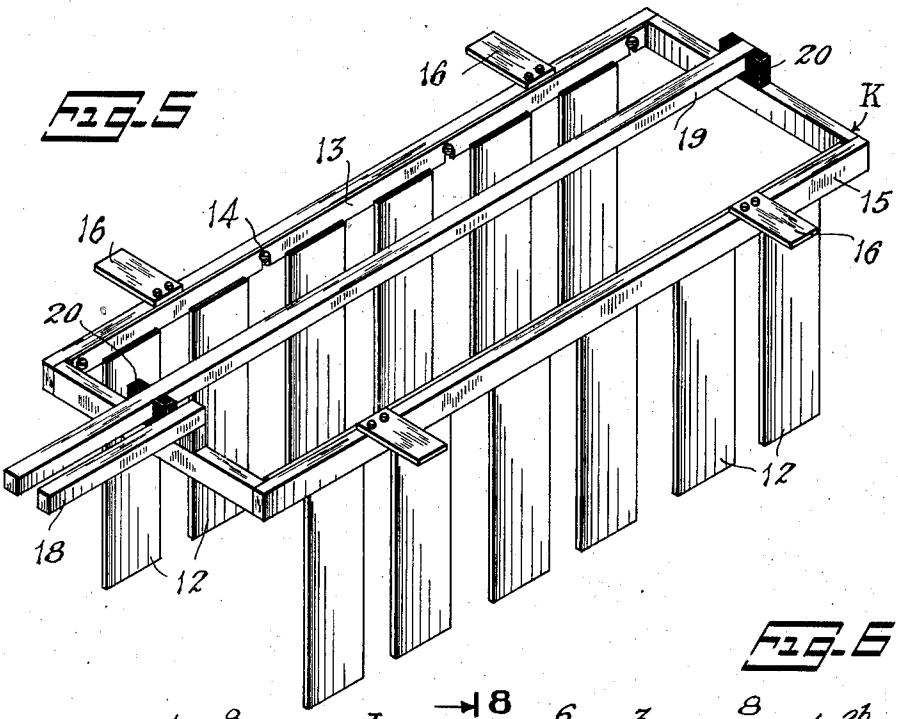

Fig. 6

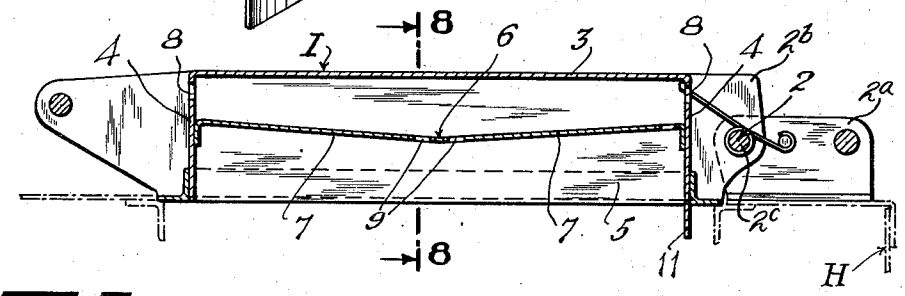

Fig. 7

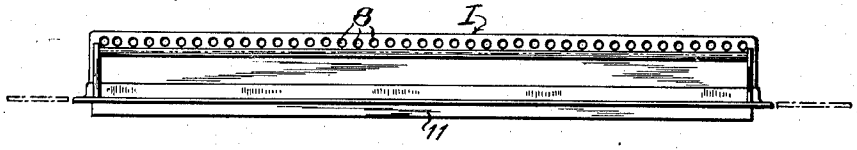

Fig. 8

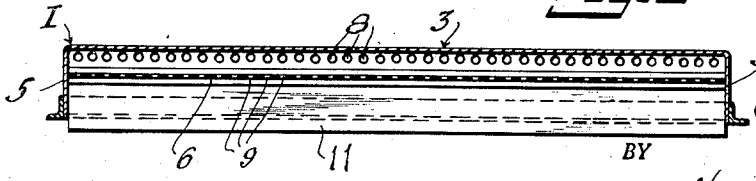

INVENTOR.
Charles Schiffl.

BY

Harry B. Cook,

ATTORNEY

Patented Apr. 13, 1948

2,439,491

UNITED STATES PATENT OFFICE

2,439,491

ENCLOSED ELECTROPLATING TANK

Charles Schiffl, Montclair, N. J.

Application June 2, 1942, Serial No. 445,423

3 Claims. (Cl. 204—277)

1

This invention relates in general to electroplating apparatus and more particularly to a tank for holding the electrolyte and to the structure and the mounting in the tank of anodes and cathodes.

In electroplating operations, and especially when chromium plating is being done, vapors and fumes rise from the electrolyte in the tank, which are unpleasant and detrimental to the health of operators and also contain appreciable quantities of the electrolytic solution. Ventilating systems have been utilized to carry off the vapors and fumes and thereby to reduce the possibility of physical injury to the persons in the vicinity of the tank. However, these systems in removing the vapors thereby steadily carry off small quantities of the electrolyte, which deleteriously affects the plating operation and requires frequent replenishment with consequent addition to the cost of the electroplating operations. Also, the known ventilating systems deleteriously affect the plating operations in other ways, for example, by excessively reducing the temperature of the electrolyte or by promoting corrosion of the electrode supports.

Therefore, one object of my invention is to provide a novel and improved ventilating system for electroplating apparatus whereby fumes or gases shall be prevented from escaping into the room in which the electroplating operation is being conducted, removal of liquid from the electrolyte by the ventilation shall be reduced to the minimum, and the ventilation shall not deleteriously affect the electroplating operation in any manner.

Other objects, advantages and results of the invention will appear from the following description in conjunction with the accompanying drawings in which

Figure 1 is a top plan view of an electroplating tank embodying my invention with the cover broken away for clearness in illustration.

Figure 2 is a transverse vertical sectional view on the line 2—2 of Figure 1.

Figure 3 is a fragmentary enlarged vertical sectional view on the line 3—3 of Figure 1.

Figure 4 is a similar view on the line 4—4 of Figure 1.

Figure 5 is a detached perspective view of the anodes and anode support.

Figure 6 is an enlarged transverse sectional view through the cover of the tank.

Figure 7 is a front elevational view of the cover on the scale shown in Figure 2, and

Figure 8 is a longitudinal vertical sectional view on a similar scale through the cover taken on the line 8—8 of Figure 6.

Specifically describing the invention, the tank includes a container A for electrolyte B, which preferably has a glass lining C and is open at its top. The container is enclosed within a heat insulated housing D which provides between two side walls and the side walls of the container, a chamber E for hot water or other heating liquid which may be circulated through the chamber by suitable piping F which is connected to a source of steam or hot water by a supply pipe G.

2

The container and its housing D are enclosed within an outer casing H so that all walls of the casing are in spaced relation to the corresponding walls of the housing D. The top wall of the casing H has an opening 1 for access to the container, said opening being normally closed by a cover I which is hingedly connected at 2 to swing on a horizontal axis above the top of the tank. The hinged connection is shown as comprising hinge brackets 2*a* secured to the top of the casing, one adjacent each end of the cover I, which are pivotally connected to hinge arms 2*b* on the cover by a hinge rod 2*c*. The cover has a top wall 3, side walls 4, end walls 5 and a partition 6 beneath the top wall which has portions 7 above and converging downwardly toward the top of the electrolyte container and meeting each other intermediate said side walls above the liquid in said container when the cover is closed. With this construction, any moisture that rises from the electrolyte will impinge upon the underside of the converging portions 7 of the partition 6, and if said partition is cooler than the moisture, the latter will condense on the partition and run downwardly toward the longitudinal center thereof and then drip into the container.

The side walls 4 of the cover have perforations 8 above the partition 6, and said partition has perforations 9 closely adjacent the meeting line of said portions 7. To the casing is connected a suitable suction pump, as by a suction pipe 10, so that when the pump is operating and the cover I is closed, currents of air will be drawn inwardly through the perforations 8 over the upper side of the partition 6, thence downwardly through the perforations 9, transversely of the open top of the container A and thence downwardly through the spaces between the walls of the casing H and the corresponding walls of the housing D. These currents of air will cool the partition 6 and will carry off some of the gases that rise from the electrolyte during electroplating operations so that such gases cannot escape from the tank into the room in which the tank is located.

A drip flange 11 is secured to the inside of the cover I and extends longitudinally of the cover approximately parallel to the axis of the hinge 2 so that the flange will be disposed over the open top of the container when the cover is both opened and closed. Thus, when the cover is partially open for example, during insertion and removal of the articles being plated, any liquid collected on the partition 6 will run along the par-

tition down the side wall of the cover, onto the flange 11 from where it will drip into the container.

With this construction, it will be observed that some of the gases that might be injurious to the health of persons working in the vicinity of the tank will be carried off by the ventilating apparatus and loss of liquid from the electrolyte will be reduced by condensation of some of the moisture in the gases on the partition 6 and the return thereof to the electrolyte container.

The tank has mounted therein a plurality of flat anode plates 12. As shown, there are two sets of anode plates and the plates of each set are secured as by welding to a bar 13. These bars are separably mounted as by screw and slot connections 14 on two opposite parallel side pieces 15 of an annular or rectangular conductor and support K. Preferably all portions of the support K are in the same general plane, and the anode plates 12 are suspended from the support in planes approximately perpendicular to the general plane of the support. The support has a plurality of laterally projecting brackets 16 which are set on insulating blocks 17 which are in turn disposed on the top edges of the housing D so that the support will be disposed within the container A and the electrodes will depend into the electrolyte as shown in Figure 2. The conductor and support K may be connected in an electric circuit through a buss bar 18.

A cathode conductor and support 19 is mounted on and extends across the anode support K, being mounted in seats 20 of insulating material that are secured on the anode support. From this cathode support bar 19 may be suspended article hanging racks 21 or articles themselves to be plated. Suitable article holding racks are described and claimed in my copending application Serial No. 445,424, filed June 2, 1942, now abandoned.

With my invention, there is a minimum of corrosion of the electrodes and their mountings, these being maintained substantially dry by the condensation of the vapors from the electrolyte on the partition 6 and by the air currents passing over the electrodes and the mountings thereof. Moreover, the ventilation has a minimum tendency to reduce the temperature of the electrolyte, due to the path of the air currents along the walls of the insulated housing D which are between the air currents and the electrolyte container.

While I have shown and described the now preferred embodiment of my invention, it will be understood that many modifications and changes may be made in the details of structure without departing from the spirit or scope of the invention.

Having thus described my invention, what I claim is:

1. An electroplating tank comprising a container for an electrolyte having an open top, a casing completely enclosing said container and having a top wall provided with an opening above said container for access to the latter, a removable cover for said opening having top, side and end walls and a partition beneath said top wall of the cover formed with portions extending from the side walls that converge downwardly toward and meet above the open top of the container so that moisture rising from the electrolyte in said container will impinge on said converging portions, perforations in said converging portions closely adjacent the meeting line of said portions and perforations in the side walls of said cover above said partition, and means for drawing air through said perforations and transversely of the open top of said container for cooling said converging portions to cause condensation of moisture thereon and to withdraw some of the gases that rise from said electrolyte.

2. The electroplating tank set forth in claim 1 wherein said cover is hingedly mounted to swing about a horizontal axis above the open top of said container, and with the addition of a drip flange on the inside of said cover adjacent and approximately parallel with the hinged side thereof, whereby when the cover is partially opened liquid on the underside of said partition will run downwardly thereover onto said flange and then drip into said container.

3. An electrolytic apparatus comprising a container for electrolyte having an open top and wherein relatively warm moisture and gases are formed during operation of the apparatus, a casing completely enclosing said container with spaces between said container and said casing, said casing having a top wall provided with an opening above said container for access to the latter, a removable cover for said opening having top, side and end walls and a partition beneath said top wall of the cover formed with portions extending inwardly from the side walls that converge downwardly toward and meet above the open top of the container so that moisture rising from the electrolyte in said container will impinge on said converging portions, perforations in said converging portions closely adjacent the meeting line of said portions and perforations in said side walls of said cover above said partition, and means for drawing air through said perforations and transversely of the open top of said container above said electrolyte and downwardly through the spaces between said container and said casing and out of the casing, whereby said converging portions will be cooled so that some of the moisture rising from said electrolyte will condense on said portions and drip into the container while at the same time some of the gases that rise from the electrolyte will be withdrawn.

CHARLES SCHIFFL.

REFERENCES CITED

The following references are of record in the file of this patent:

UNITED STATES PATENTS

Number	Name	Date
692,597	Baum	Feb. 4, 1902
1,008,383	Sparre	Nov. 14, 1911
1,057,788	Walker	Apr. 1, 1913
1,144,271	Weber	June 22, 1915
1,243,384	Christman	Oct. 16, 1917
1,344,030	Greenwalt	June 22, 1920
1,435,671	Stewart	Nov. 14, 1922
1,444,787	Greenawalt	Feb. 13, 1923
1,545,352	Rodriguez	July 7, 1925
1,664,482	Pfanhauser	Apr. 3, 1928
1,723,480	Hannon	Aug. 6, 1929
1,857,903	Wensley	May 10, 1932
1,917,657	MacChesney	July 11, 1933
2,110,991	Gabrielson	Mar. 15, 1938
2,111,377	Wales	Mar. 15, 1938

FOREIGN PATENTS

Number	Country	Date
493,223	Germany	Mar. 11, 1930