July 2, 1929. C. C. MILES 1,719,120

WALLET FOR KEYS

Original Filed March 10, 1926

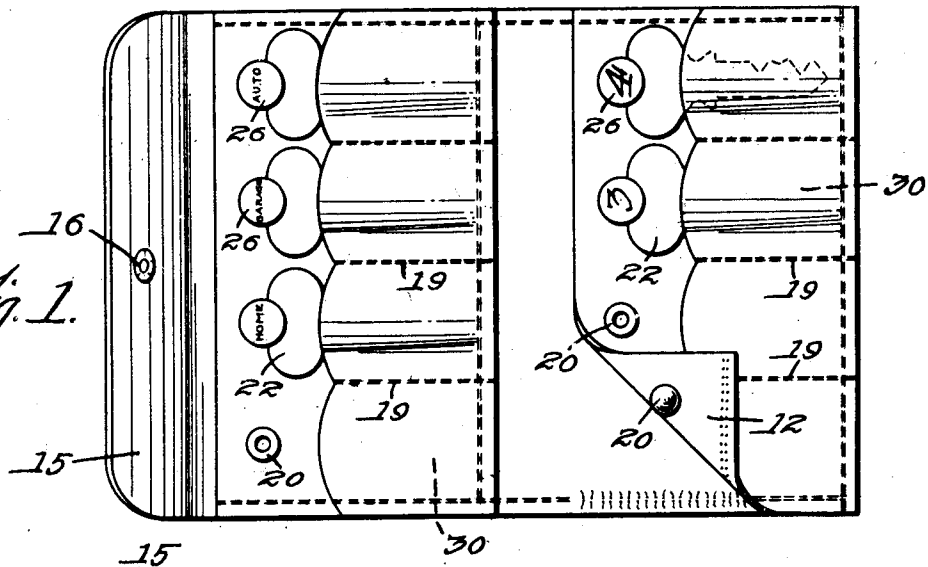

Fig. 1.

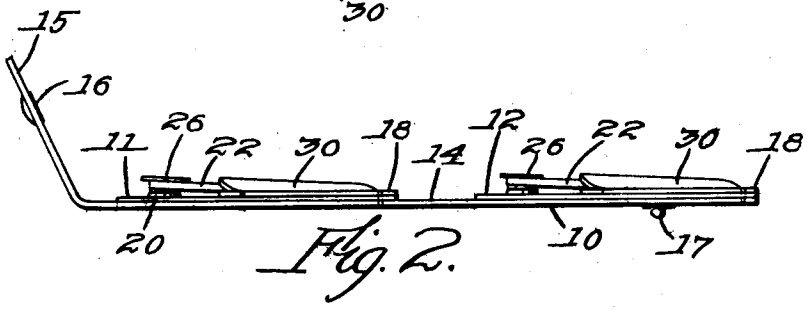

Fig. 2.

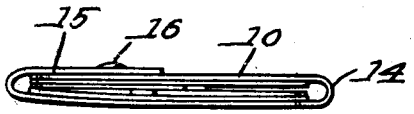

Fig. 3.

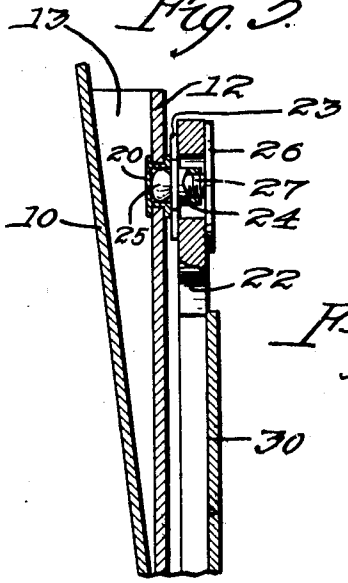

Fig. 4.

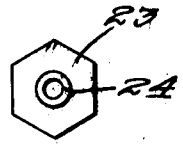

Fig. 6.

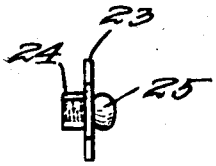

Fig. 5.



Fig. 7.

Inventor
Carroll C. Miles
By Attorneys

Southgate Fay & Hawley

Patented July 2, 1929. 1,719,120

UNITED STATES PATENT OFFICE.

CARROLL CUTLER MILES, OF LEOMINSTER, MASSACHUSETTS, ASSIGNOR TO RUTH D. MILES, OF LANCASTER, MASSACHUSETTS, DOING BUSINESS AS MILES KEDEX COMPANY.

WALLET FOR KEYS.

Application filed March 10, 1926, Serial No. 93,715. Renewed November 17, 1928.

This invention relates to a wallet or the like adapted to be carried in the pocket for holding keys and similar articles. The principal objects of the invention are to provide a device for this purpose in which the keys will be held firmly in designated positions and will be so spaced and related to each other that a series of them held in this container will not occupy any great amount of space and will not project where they can wear on the pocket; to provide detachable means for holding the keys in the desired positions; and to designate the different keys so that the user will not have to go through a whole bunch of keys for the particular one he wants. The device is also adapted to have compartments for bills, cards and change.

Other objects and advantages of the invention will appear hereinafter.

Reference is to be had to the accompanying drawings in which

Fig. 1 is a view of a preferred form of the invention in the form of a wallet shown open and out flat with one corner broken away to show the arrangement;

Fig. 2 is an edge view of the same;

Fig. 3 is a similar view with the wallet closed;

Fig. 4 is an enlarged sectional view of one of the pockets showing the details of construction;

Fig. 5 is an edge view of the nut which constitutes a part of the fastening device;

Fig. 6 is a plan of the same; and

Fig. 7 is an edge view of the screw plate, all on enlarged scale.

The wallet itself is shown as formed with a back 10 of leather or other flexible material to which are sewed along the edges two pieces of leather 11 and 12. The sewing in each case is at the bottom and along the ends. The top is open to furnish a pocket or compartment 13 for receiving bills, cards, etc. These two pieces 11 and 12 are spaced apart at 14 so that there is only one thickness of leather at that point and the parts can be closed over as shown in Fig. 3 with this space 14 as a hinge. There is a flap 15 also at the top which is provided with a detachable fastening device 16 co-operating with a stud 17 on the back to close the wallet in the position shown in Fig. 3.

On each of the pieces 11 and 12, there is a piece of leather 18 sewed to the base 11 or 12 along the bottom edges and also sewed to it at intervals by lines of stitching 19 to form small pockets 30 for the keys as will appear.

The pieces 11 and 12 are provided with parts 20 of an ordinary detachable fastening device of any desired character. These are all placed centrally with respect to the pockets 30 and at uniform distances above them.

Each key 22 has some kind of a hole through it at the top and I utilize that for the purpose of providing a detachable fastening device. This is shown as a nut 23 having an internally screw threaded boss 24 on one side and a convex projection 25 on the other. This projection 25 is adapted to engage in the detachable fastening device 20 to detachably hold the nut in position. This boss 24 is placed in the hole or opening in the key and a plate 26 having a screw threaded projection 27 is placed on the other side of the key to screw into the boss 24. These parts are then screwed up and the two members 23 and 26, thereafter, stay with the key although detachably connected.

On the outer side of the plate 26 is located or engraved or otherwise fixed some designation as for example a numeral as shown in the bottom series in Fig. 1 or a word as shown in the upper series. It will be understood that these designations go with the key and when the keys are removed, they do not become detached from them although they can be changed readily as may be desired.

In the use of the device, the key with the two parts 26 and 23 is placed in its pocket 30 and the projection 25 forced into the opening in the detachable fastening disc 20. Thus the keys are fixed in position and they do not get out of place or cause any other trouble. It will be noticed that in folding the wallet together, the point where the extra thickness comes at the fastening devices on the keys in the lower pockets comes in contact with the pockets in the other section at the thin point so that the wallet is of substantially uniform thickness when in use. Any ordinary form of detachable fastening device can be employed and I have not described these in detail.

Although I have illustrated and described only a single form of the invention, I am aware of the fact that modifications can be made therein by any person skilled in the art without departing from the scope of the invention as expressed in the claims. Therefore I do not wish to be limited to all the de-

tails of construction herein shown and described, but what I do claim is:—

1. As an article of manufacture, a key wallet having a series of key pockets, said pockets being adapted to hold the shank of the key, and means fixed to the wallet above each pocket for detachably holding the head of the key, to retain said key in position, in the pocket individually.

2. As an article of manufacture, a key wallet having a plurality of series of key pockets, each pocket being adapted to hold the shank of a key, and means mounted above each pocket for detachably holding the keys in position therein individually, said means, when the wallet is closed, being arranged in alternate position with respect to each other.

3. As an article of manufacture, a key wallet having a back, a pocket located on the inside thereof extending from one edge of the back to the other and being open at the top, and forming the back of a series of key pockets located on the front thereof for receiving the shank portions of the keys, and detachable fastening devices secured to the pocket near its top in registration with the key pockets and keys therein, whereby the keys can be held in their designated positions independently of the key pockets and protected by the key pockets.

4. As an article of manufacture, a key wallet having a back, a pair of pockets located on the inner side thereof and spaced apart on the back to permit folding, said pockets extending from one edge of the back to the other and each being open at the top, said pockets each forming the back of a series of key pockets located on the front thereof for receiving the shank portions of keys, and detachable fastening devices permanently carried by the first named pockets at their free edges near their tops in registration with the key pockets for holding the keys in their designated positions.

5. The combination with a wallet having pockets for keys, with a key adapted to be placed in one of the pockets and having a designating means comprising a disc on one side, and a nut on the other side detachably connected to the disc through the key and a quickly detachable connection between said means and the wallet above said pocket.

6. The combination with a wallet, of a key having an identifying disc on one side and an element on the other side connecting with the disc by a series of threads through the key and having thereon a part of a quick detachable connection, adapted to engage the wallet.

In testimony whereof I have hereunto affixed my signature.

CARROLL CUTLER MILES.