Jan. 30, 1945. W. GIFFARD 2,368,294

REFRIGERATING APPARATUS

Filed Sept. 13, 1943

Fig. 1

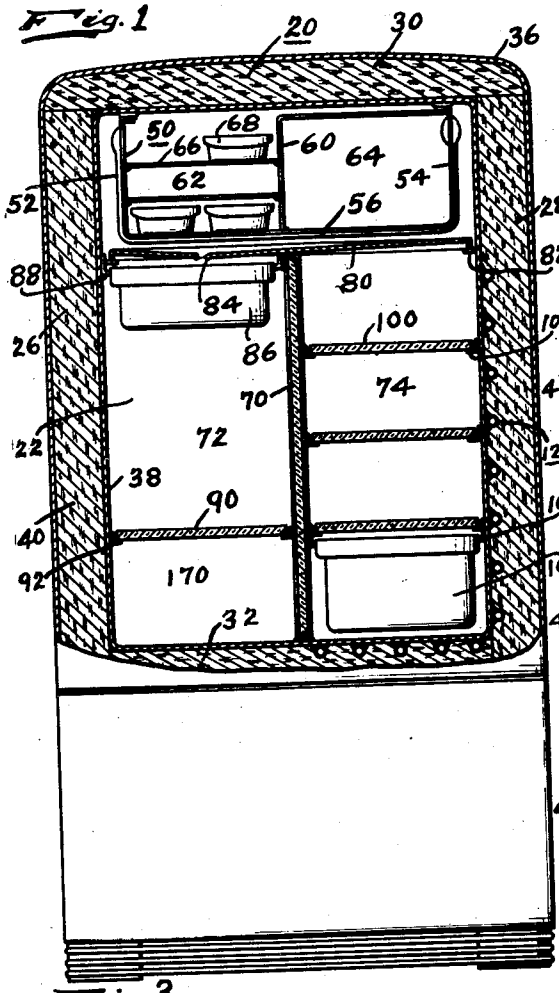

Fig. 2.

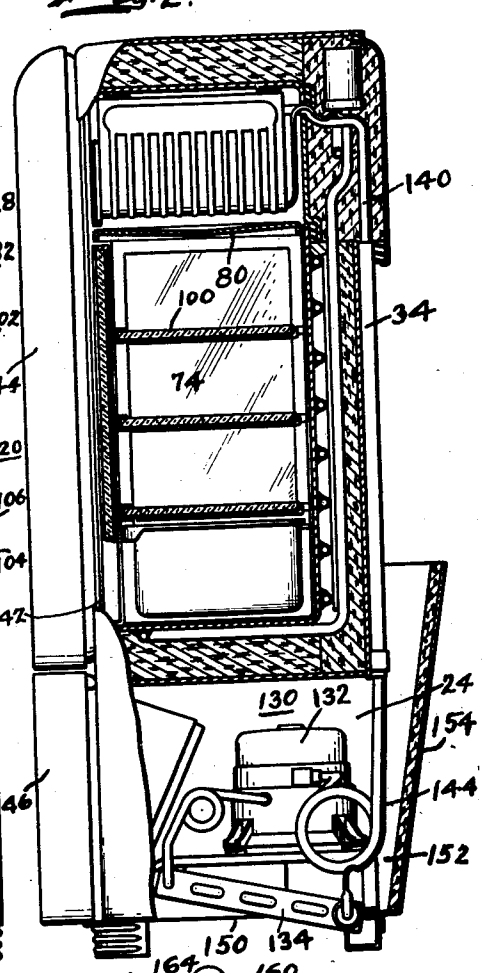

Fig. 3.

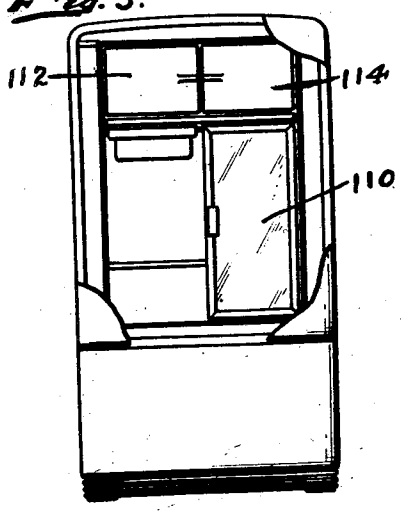

Fig. 4.

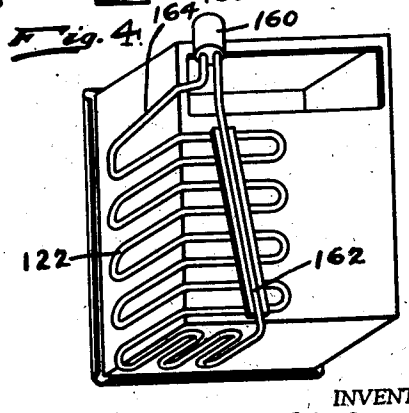

INVENTOR.
Whitney Giffard
BY Ralph E. Baker
ATTORNEY

Patented Jan. 30, 1945 2,368,294

UNITED STATES PATENT OFFICE

2,368,294

REFRIGERATING APPARATUS

Whitney Giffard, Detroit, Mich., assignor to Nash-Kelvinator Corporation, Detroit, Mich., a corporation of Maryland

Application September 13, 1943, Serial No. 502,137

4 Claims. (Cl. 62—89)

This invention relates to refrigerating apparatus, and more particularly to refrigerating apparatus of the multiple temperature type.

One of the objects of my invention is to provide a new and improved arrangement for maintaining different temperatures and different relative humidities in a plurality of zones.

Another object of my invention is to provide a refrigerator cabinet with its interior divided into a sub-freezing compartment, a low temperature high humidity compartment and a low temperature low humidity compartment with the circulation of air being limited between the sub freezing compartment and the low and high humidity compartments and direct circulation between the low and high humidity compartments being entirely prevented, and to cool the low temperature compartment by the absorption of heat through the exterior walls and slightly by the partitioning member between the high and low humidity compartments which partitioning member is cooled by the air circulating between the low humidity and sub freezing compartments.

Further objects and advantages of the present invention will be apparent from the following description, reference being had to the accompanying drawing, wherein a preferred form of the present invention is clearly shown.

In the drawing:

Fig. 1 is a front view in elevation of a preferred embodiment of my invention partly in cross-section and partly broken away;

Fig. 2 is a side view in elevation of the embodiment shown in Fig. 1 partly in elevation and partly broken away;

Fig. 3 is a front view in elevation of the embodiment shown in Fig. 1 with parts broken away; and

Fig. 4 is a perspective view of a portion of the embodiment shown in Fig. 1.

In accordance with my invention, I have provided a new and improved arrangement for maintaining a plurality of zones in a food storage chamber of a refrigerator cabinet at different temperatures and different humidities. Across the top of the food storage chamber I have disposed a primary refrigerant evaporating element having a rapid freezing zone and a low temperature storage zone within its confines and having air cooling surfaces outside of said zones. Below the evaporating element the food storage chamber is divided into two compartments by means of a vertical partition. One of these compartments is cooled by cold convection currents from the primary evaporating element, there being some circulation of air between the compartment and the evaporating element through the top of the compartment. A dry food storage zone is thus provided in this compartment, any moisture condensing out the air being frozen on the primary evaporating element. The other compartment is maintained at a high humidity by limiting the circulation of air between it and the primary evaporating element. This restriction on circulation is accomplished by horizontal imperforate members arranged in vertically spaced relationship with the compartment and across the top thereof, some of the members serving as article supporting shelves. These members are arranged in spaced relationship to the walls of the compartment to permit only limited circulation of air. A secondary evaporating element is employed to lower the temperature of this compartment to the desired degree. A door closes the front of this compartment to keep the humidity conditions within certain limits within this compartment. Thus a high temperature and high humidity zone is provided in this second compartment. By the above arrangement, several zones of definite temperatures and humidities are provided. One zone is maintained at its desired temperature and humidity substantially independently of other zones. Since the zones in this arrangement lie side by side rather than on top of one another, the cold air which naturally descends to the bottom of the zone has little influence on the temperature of the adjoining zone. It is thus possible by this arrangement to provide zones having sharply defined temperature and humidity differences instead of zones which have temperature and humidity conditions which approach each other as the separating boundaries are approached.

Referring to the drawing, numeral 20 designates, in general, a refrigerator cabinet having a food storage chamber 22 and a machine compartment 24. The cabinet is provided with insulated walls which include side walls 26 and 28, top wall 30, bottom wall 32 and rear wall 34. These insulated walls are formed by an outer lining member 36, an inner lining member 38 with insulation 40 interposed therebetween. The inner lining member 38 forms the walls of the food storage chamber 22. Access to the food storage chamber is afforded through an opening which is closed by a door 44. Door 46 is also provided affording access to the machine compartment 24.

Within the food storage chamber 22 there is

disposed a primary refrigerant evaporating element 50 which is supported from the top wall of the inner lining member 38 and which extends substantially from side to side and front to back of the food storage chamber. This evaporating element is of the conventional U-shaped design having refrigerated side walls 52 and 54 and a refrigerated bottom wall 56. An inverted L-shaped partition 60 is provided between the refrigerated side walls to divide the evaporating element 62 and a low temperature storage zone 64. Shelves 66 are supported horizontally between the partition 60 and the refrigerated side wall 52 to provide a support for receptacle 68. If desired, additional refrigerant evaporating means may be associated with one or more of these shelves 66 to enhance a rapid freezing effect produced by the evaporating element 50. Below the evaporating element 50 is disposed a partition wall 70 which divides the lower portion of the food storage chamber 22 into two compartments 72 and 74 which are open at the top thereof. Over the top of these two compartments there is disposed a sheet metal drip pan 80 which is supported from the side walls of the inner lining member 38 by means of brackets 82. This drip pan slopes downwardly to a point over the compartment 72 where a slot 84 is provided to permit drainage of the moisture collected in the drip pan. A large receptacle 86 is suspended in compartment 72 below the drip pan by means of brackets 88. The drip pan is slightly spaced about its outer edges from the walls of the inner lining member to permit a limited circulation of air between the interior of the compartment 74 and the compartment in which the refrigerant evaporating element 50 is disposed. A glass shelf 90 is supported within compartment 72 near the bottom thereof by brackets 92. The temperature below this shelf is higher than the temperature thereabove. If desired, an openwork shelf may be used. If so, the temperature therebelow will be the same as thereabove. In compartment 74 thereare provided a plurality of substantially imperforate shelves 100 which are supported from the inner lining member 38 and the partition member 70 by means of brackets 102. These shelves are preferably arranged in spaced relationship to the one or more walls of the inner lining member 38 and the partition member 70 so that limited circulation of air is permitted between the spaces enclosed by the several shelves. Large receptacle 104 is suspended within the lower part of compartment 74 by means of brackets 106. A door 110 which is preferably of glass is provided at the front of compartment 74 thereby substantially isolating compartment 74 from the compartment 72. Likewise a door 112 and a door 114 are provided at the front of compartments 62 and 64, respectively. For cooling the compartment 74 the secondary refrigerant evaporating element 120 is provided. This element consists of a serpentine conduit 122 arranged in intimate heat exchange relation with the outer walls of the inner lining member 38 which enclose compartment 74 as shown in Fig. 4. This serpentine conduit may be secured to the lining member as by soldering or the like.

Liquid refrigerant is supplied to the primary refrigerant evaporating element 50 by a condensing unit 130 which is disposed within the machine compartment 24. This condensing unit comprises a motor and compressor directly connected and arranged within a sealed casing 132 and a condenser 134 which is disposed in an inclined position below the motor compressor unit. Evaporated refrigerant is conducted from the refrigerant evaporating element 50 through a conduit 140 to the motor compressor unit. The compressor compresses the refrigerant and then delivers it to the condenser 134 where it is liquefied. The liquefied refrigerant is then directed through a small diameter tube 144 to the refrigerant evaporating element 50. This small diameter tube serves to meter the flow of the liquid refrigerant in a manner well understood in the art. Preferably, the suction conduit 140 and the small diameter tube 144 are arranged in heat exchange relation; the air for cooling the condensing unit 130 is admitted to the machine compartment 24 through an opening 150 in the bottom of the compartment. This air is circulated over the condensing unit and out through an opening 152 at the rear of the machine compartment. This circulation of air through the machine compartment may be either forcibly or naturally induced. If naturally induced, a flue 154 is preferably attached to the rear of the cabinet over the opening 152 to enhance the natural convection effect.

Liquid refrigerant is supplied to the secondary evaporating element 120 from a condenser 160. This condenser is connected to the secondary evaporator by a liquid supply conduit 162 which extends from the condenser to the inlet portion of the serpentine conduit 122 on the bottom of the inner lining member 38. The outlet of the serpentine conduit is connected to the condenser by means of a return conduit 164. The condenser 160 is arranged in heat exchange relation with a coiled portion (not shown) of the primary refrigerating system as shown and described in Letters Patent No. 2,329,140.

The primary refrigerating system is preferably operated under the control of a thermostat (not shown) so as to maintain a below freezing temperature in the refrigerant evaporating element 50. The zones 62 and 64 are thereby maintained at below freezing temperatures for the freezing of substances and the storage of frozen foods respectively. The outer surfaces of the refrigerant evaporating element 50 are also thereby maintained at below freezing temperatures and serve to cool the circulating air from compartment 72. In this connection the drip pan 80 may be spaced from the walls of the cabinet any distance desired. The greater the spacing the colder the air in compartment may be. A dry storage zone is thereby provided within compartment 72. The receptacle 86 may be employed for the storage of meats and the like. The shelf 90 serves to insulate a portion of the compartment 72 to provide a warm zone 170 suitable for the storage of butter or the like.

The secondary refrigerant evaporating element 120 is preferably maintained at or slightly above freezing temperatures so as to provide an above freezing temperature in the compartment 74. The temperature of the secondary evaporating element is determined by the effectiveness of the heat exchange between the secondary condenser 160 and the low side of the primary refrigerating system as is well understood in the art. Because of the restricted circulation of air between the compartment 74 and the primary evaporating element 50, a high humidity is provided within the compartment since little moisture is removed by freezing upon the evaporating element 50. The latter serves to prevent the formation of excess of moisture within the compart-

ment 74 and also to produce a certain amount of circulation throughout the compartment, some movement of air being desirable for the proper preservation of foods.

It will thus be seen that compartments 72 and 74 are maintained at different temperatures and different humidities quite independently of each other. Since the natural tendency of cold air is to descend, the partition 70 which separates the two compartments is not subjected to the extremes of temperatures existing in one or the other of the two compartments whereby a greater temperature gradient may be established between the two zones. At the same time both compartments are in connection with the primary refrigerant evaporating element 68 which serves to cool one of the compartments; namely, 72, and to prevent the formation of excessive moisture in the other compartment 74. The partition 70 aids some in cooling compartment 74 in the event the drip pan is spaced from the cabinet walls to allow a substantial air circulation throughout compartment 72. In this case the air circulating in compartment 72 is low in temperature and the wall 70 is cooled to a low temperature to aid in cooling the air in compartment 74.

Although only a preferred form of the invention has been illustrated, and that form described in detail, it will be apparent to those skilled in the art that various modifications may be made therein without departing from the spirit of the invention or from the scope of the appended claims.

I claim:

1. Refrigerating apparatus comprising, in combination, an insulated cabinet having a food storage chamber, refrigerant evaporating means disposed in said chamber for freezing substances and for cooling circulating air, vertically arranged partitioning means arranged to divide said chamber into two compartments that are in direct air circulating relation with said evaporating means and in communication with each other at one end of said compartments only, means associated with one of said compartments for restricting the circulating of air between said compartment and said evaporating means and a second refrigerant evaporating means arranged in heat exchange relation with said one compartment.

2. Refrigerating apparatus comprising, in combination, an insulated cabinet having a food storage chamber, refrigerant evaporating means disposed in the upper part of said chamber for freezing substances and for cooling circulating air, vertically arranged partitioning means arranged to divide said chamber into two compartments which are in direct air circulating relation with said evaporating means and in communication with each other at their upper ends only, means associated with one of said compartments for restricting the circulation of air between said compartment and said evaporating means and a second refrigerant evaporating means arranged in heat exchange relation with said one compartment.

3. Refrigerating apparatus comprising, in combination, an insulated cabinet having a food storage chamber, a primary refrigerant evaporating element disposed in the upper part of said chamber for freezing substances and for cooling circulating air, partitioning means arranged to divide said chamber into two compartments arranged side by side on the same horizontal plane and which are in direct air circulating relation with said primary evaporating element and in communication with each other at their upper ends only, means associated with one of said compartments for restricting the circulation of air between said compartment and said primary evaporating element, and a secondary refrigerant evaporating element arranged in heat exchange relation with said one compartment.

4. Refrigerating apparatus comprising, in combination, an insulated cabinet having a food storage chamber, a primary refrigerant evaporating element disposed in the upper part of said chamber and adapted to freeze substances and to cool circulating air, a vertical partition disposed below said primary evaporating element and dividing said chamber into two compartments which are in direct communication with said primary evaporating element, a plurality of substantially imperforate horizontal members disposed at vertically spaced intervals in one of said compartments and arranged in spaced relationship to the walls of said compartment so as to permit only limited circulation of air between said compartment and said primary evaporating element, and secondary refrigerant evaporating element arranged to partially enclose said one compartment in heat exchange relation with the walls thereof.

WHITNEY GIFFARD.