Feb. 26, 1952 H. W. WASHBURN 2,587,575

MASS SPECTROMETRY

Filed March 24, 1951 3 Sheets-Sheet 1

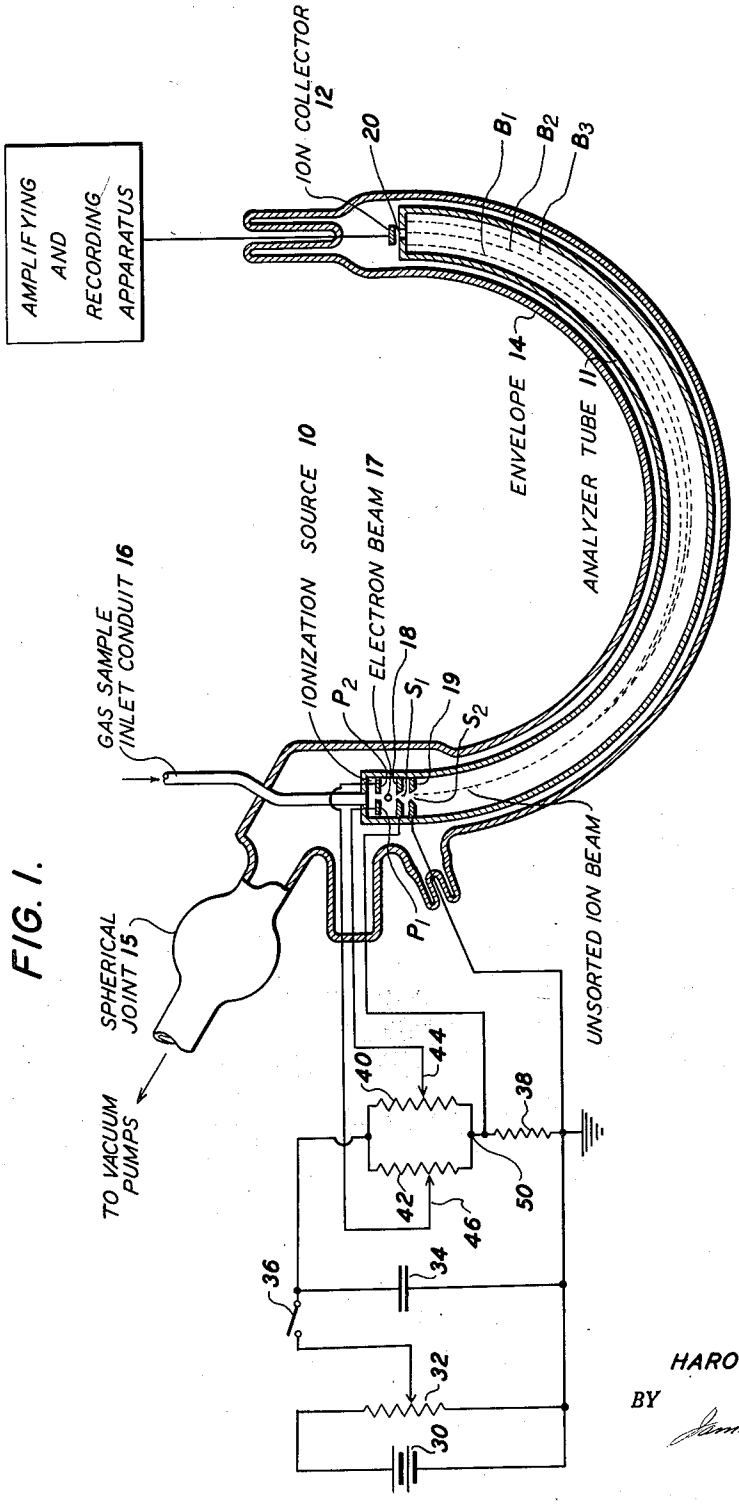

FIG. 1.

INVENTOR.
HAROLD W. WASHBURN

BY James B. Christie

ATTORNEY

Feb. 26, 1952 H. W. WASHBURN 2,587,575

MASS SPECTROMETRY

Filed March 24, 1951 3 Sheets-Sheet 2

FIG. 2.

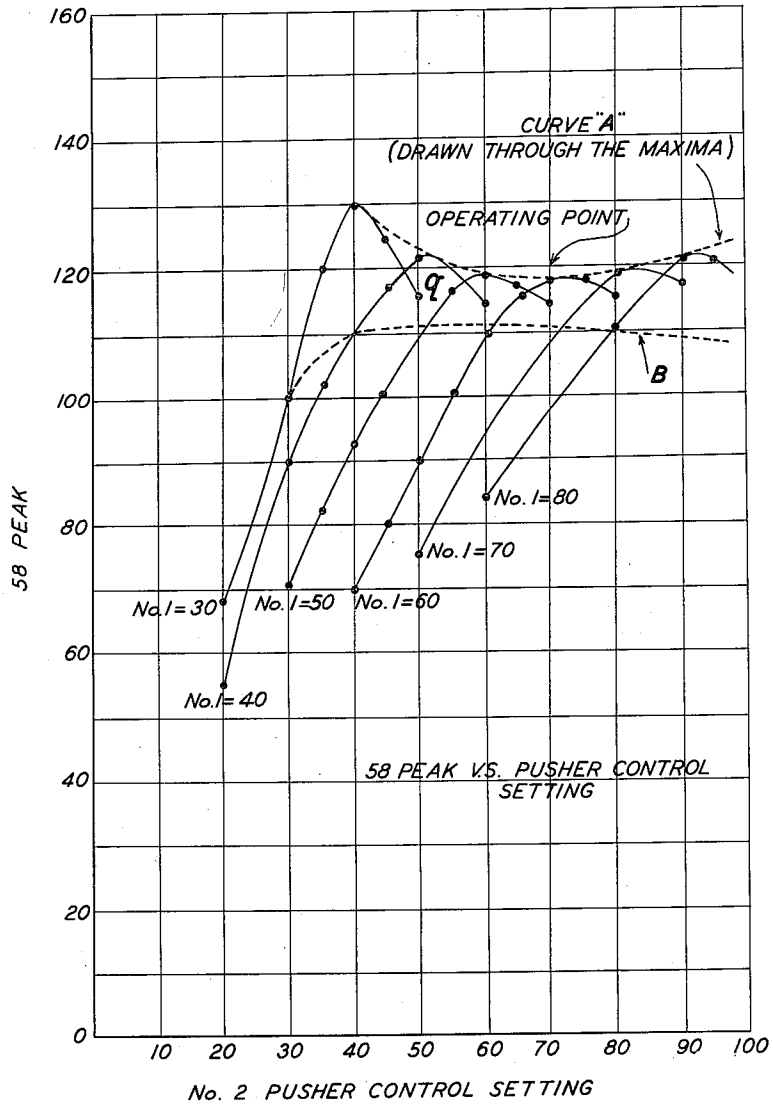

INVENTOR.
HAROLD W. WASHBURN

BY James B. Christie

ATTORNEY

Feb. 26, 1952 H. W. WASHBURN 2,587,575

MASS SPECTROMETRY

Filed March 24, 1951 3 Sheets-Sheet 3

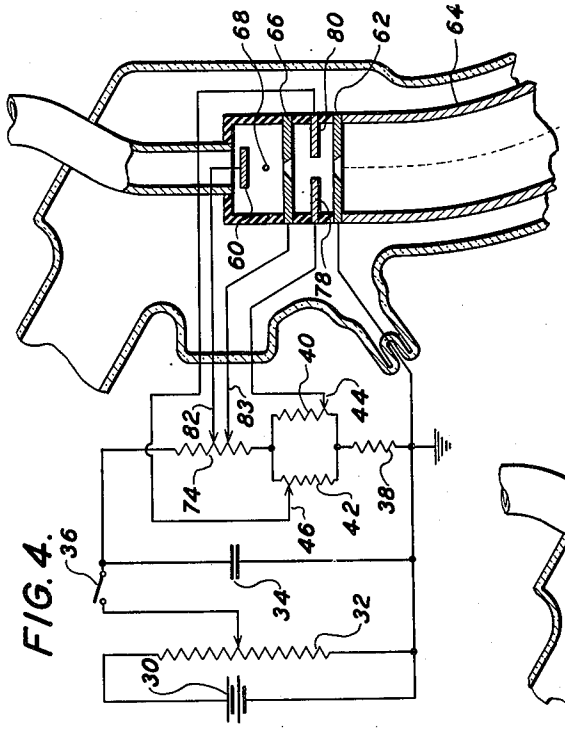

FIG. 4.

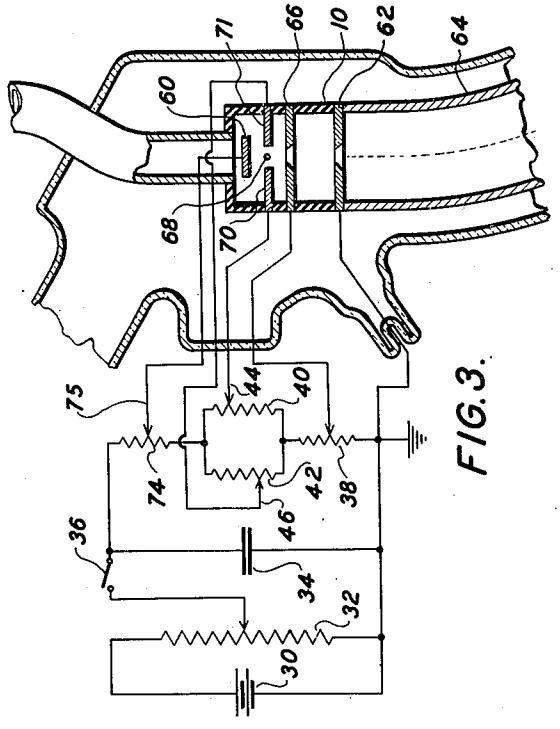

FIG. 3.

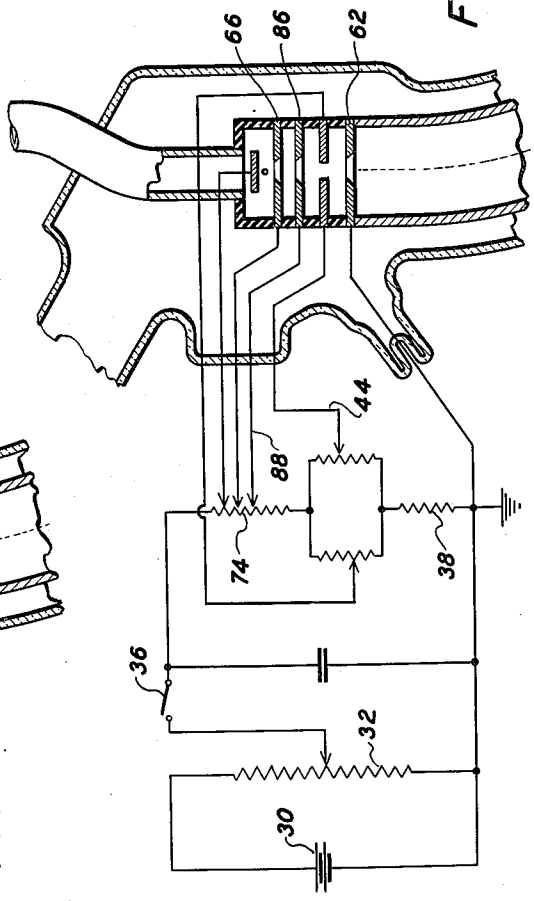

FIG. 5.

INVENTOR.
HAROLD W. WASHBURN

BY James B. Christie

ATTORNEY

Patented Feb. 26, 1952 2,587,575

UNITED STATES PATENT OFFICE

2,587,575

MASS SPECTROMETRY

Harold W. Washburn, Pasadena, Calif., assignor to Consolidated Engineering Corporation, Pasadena, Calif., a corporation of California

Continuation of application Serial No. 513,528, December 9, 1943. This application March 24, 1951, Serial No. 217,355

7 Claims. (Cl. 250—41.9)

1

This invention is concerned with mass spectrometry and particularly to improved methods of and apparatus for mass spectrometry to improve spectrum uniformity. This application is a continuation of my co-pending application Serial No. 513,528, filed December 9, 1943, now abandoned.

A mass spectrometer is essentially an apparatus for producing ions and sorting the ions according to the ratio of their mass to their charge; i. e., according to their specific mass. A sample to be analyzed is ionized in a chamber or ion source, for example by heating or by electron bombardment, and the resulting ions are propelled by an electrical field from the ion source into an analyzer. In the analyzer, the ions, under the influence of a magnetic or electrical field, are sorted in accordance with their specific mass, ions of differing specific mass pursuing different paths through the analyzer. The ion beams each composed of ions of a given specific mass may be collected and discharged, the discharge current giving a measure of the partial pressure in the original sample of the parent molecules from which the particular ions derived.

In one type of mass spectrometer, ionization is accomplished in the ion source by bombarding molecules of the sample with a beam or stream of electrons. The resulting ions are expelled from the ion source into the analyzer through an aperture in an outlet electrode which separates the ion source from the analyzer. Ion propulsion is achieved by impressing a potential across the region in which the ions are formed and between one or more pusher electrodes and the outlet electrode. Frequently one or more additional apertured electrodes are interposed in the ion source between the point of ion formation and the outlet electrode, the ion propelling potential in such case being established between the pusher and successive ones of these electrodes including the outlet electrode. The several apertured electrodes function not only to control distribution of the propelling field established across the ion source, but additionally to define or collimate the ions into a beam of a cross section generally similar to the shape of the electrode apertures. The velocity of the ions as they pass through the outlet electrode is a function of the potential gradient between the point of their formation and the outlet electrode and independent of the distribution of this gradient as determined by the position and potentials of intervening collimating electrodes.

2

I have discovered that the sensitivity and stability of the spectrometer can be materially increased with a resultant improved accuracy if the potential established across the ion source (i. e. between the point of ion formation and the outlet electrode) to expel ions from the ion chamber includes a component transverse to the axis of ion travel through the outlet aperture and normal to the major axis of the aperture. The aperture in the outlet electrode as well as apertures in preceding collimating electrodes are elongated relatively narrow slits and are herein delineated as having major and minor axes as well as a longitudinal axis, the latter axis being in the direction of ion travel through the electrode and normal to the major and minor axes.

The propelling potential, having both longitudinal and transverse components, is referred to as a crossed field and is useful in adjusting the focus of the ion beam on the outlet aperture. By variation of the magnitude of the transverse field either simultaneously with or independently of variation in the magnitude of the longitudinal component of the field, the ion beam may be shifted in the direction of the minor axis of the aperture.

The crossed field or transverse component can also be adjusted to counteract so-called surface effects such, for example, as those produced by vagrant ions which charge insulating surfaces as may be formed by deposits on the walls of the ionization chamber and which tend to introduce irregularities and errors in the spectrum. Thus the use of the invention improves not only the accuracy of the instrument but also the consistency of results obtained. The crossed field effect resulting from application of propelling potential having both longitudinal and transverse components has further advantages in that:

1. The transverse component can be adjusted to select ions originating in a uniform portion of the electron beam;

2. The adjustment can be used to ascertain that the ions are being selected from such uniform part of the electron beam, since in general the variation of peak intensity with propelling potential is relatively small when ions are thus selected; and

3. The propelling potential can be so adjusted that small changes in focusing the ion beam will not affect recorded beam intensity, so that spectra of improved uniformity and intensity are obtained.

A further advantage of the use of a propelling potential having transverse components resides

in the fact that, in an analysis of mixtures having components susceptible to cracking under the prevailing conditions in the ion source, the potential may be adjusted so as to give optimum sensitivity for a given component sought to be determined. For example, the transverse component of the propelling potential may be adjusted to set the focus of the ion beam on the outlet aperture to emphasize that portion of a mass spectrum of the hydrocarbon mixture characteristic of one or more of the ingredients, say a heavy hydrocarbon such as heptane. Moreover, during the course of analysis in which peaks representative of ions of different specific mass are successively produced on a record, the ratio of the transverse and longitudinal components of the propelling potential may be changed from time to time so that each successive peak is reproduced at maximum intensity.

The invention will be more clearly understood in the light of the following detailed description which is taken in conjunction with the accompanying drawings in which:

Fig. 1 is a schematic diagram of a mass spectrometer adapted for the practice of my invention;

Fig. 2 is a graph illustrating the effect on the intensity of a peak in a mass spectrum produced by varying the transverse component of propelling potential;

Fig. 3 is a partial view of the ion source of a mass spectrometer showing another embodiment of the invention with associated electrical circuitry;

Fig. 4 is a similar partial view showing another embodiment of the invention; and

Fig. 5 is a similar partial view showing still another embodiment of the invention.

Referring to Fig. 1, the mass spectrometer there shown comprises an ionization chamber or ion source 10 disposed adjacent an analyzer tube 11 which is followed by an ion collector 12, all disposed within an envelope 14. The spectrometer is adapted to be maintained at low pressure by evacuating means (not shown) connected to the envelope through a spherical joint 15. A gas sample to be analyzed may be introduced into the ionization chamber through an inlet conduit 16 passing through the envelope wall at one end thereof.

The ion source or chamber 10 is separated from the analyzer tube 11 by an outlet electrode 19 having an aperture S_2 therein. The ion source also encloses an electrode 18 having an aperture S_1 therein aligned with the aperture S_2 in the boundary electrode 19. A pair of so-called repeller or pusher electrodes P_1, P_2 are spaced from the electrode 18 on the opposite side of an electron beam 17 projected across the ion source by an electron gun (not shown). Molecules of the gas sample introduced into the ion source through conduit 16 are converted into ions within the source by bombardment with the electron beam 17. The ions thus formed are urged toward aperture S_1 in the first propelling electrode 18 under the influence of a potential established across the region of ion formation between the pusher electrodes and the outlet electrode 19.

The ions pass through the slit S_1 in electrode 18 with appreciable velocity and are further accelerated between the electrode 18 and the barrier electrode 19. The accelerated ions issue through aperture S_2 in the barrier electrode into the analyzer tube. The two apertures in electrodes 18 and 19 function to collimate and propel the ions to be projected into the analyzer tube as a narrow beam or ribbon. Additional electrodes similar to the electrodes 18, 19 may be included in the ion source, the final velocity of ions issuing into the analyzer tube being a function in any case of the potential established in the ion source between the pusher or repeller electrodes and the terminal or barrier electrode separating the ion source from the analyzer and independent of the distribution of the field between the several collimating electrodes.

The ion beam is caused to follow a curved path in the analyzer tube due to the presence of a strong magnetic field impressed across the spectrometer by a magnet (not shown) transverse to the path of the ions. Under the influence of the magnetic field a heterogeneous ion beam entering the analyzer is separated into a plurality of separate beams B_1, B_2, B_3 according to the specific mass of the ions. By varying the accelerating potential, by varying the magnetic field or both, each of the ion beams may be focused on the collector through an aperture 20 at the end of the analyzer tube opposite the ion source. The current developed at the collector responsive to ion discharge is amplified and recorded to produce the mass spectrum of the gas being analyzed.

The two pusher electrodes P_1, P_2 disposed on opposite sides of the longitudinal axis of the ion source are separately energized so that the potential impressed across the ion source between the pusher electrodes and the terminal electrode 19 may be given a transverse as well as a longitudinal component by impressing different voltages on the two pusher electrodes. This transverse component may be varied at will by varying the ratio of voltages supplied to the two pusher electrodes to minimize changes in sensitivity resulting from disturbance of ion focus due to surface charges. The transverse component may also be varied in the same manner to minimize changes of sensitivity due to fluctuations in the emission characteristics of the electron source (not shown) and may be altered so that the peaks representing the currents corresponding to discharge of the several ion beams at the collector may be emphasized and recorded with maximum intensity.

A voltage supply circuit as illustrated diagrammatically in Fig. 1 may be used to supply potentials to the several electrodes within the ion source. This circuit includes a battery or other constant voltage source 30 across which is connected a potentiometer 32. The positive end of this potentiometer is connected through a slider and a switch 36 to a capacitor 34, also connected to the negative side of the voltage source. A potential divider circuit is connected across the capacitor and takes the form of a large resistor 38 connected in series with two parallel coupled smaller resistors 40, 42. The negative end of the potential dividing network is connected to the negative side of the voltage source 30 (in this case ground) and to the outlet electrode 19. The electrode 18 is connected to the potential dividing network between the resistor 38 and the parallel coupled resistors 40, 42, and the two pusher electrodes are connected respectively to sliders 44, 46 tapping the resistors 40, 42 respectively.

The circuit as illustrated and described is adapted for varying the potentials applied to the pusher and apertured electrodes while maintaining a constant ratio between these potentials, such variation of the propelling potentials serving to scan the ion beams across the exit or

focusing slit 20 of the analyzer tube. The relative potentials applied to the pushers P_1 and P_2 may be varied independently of the potentials on the other electrodes by manipulation of the respective sliders 44, 46.

Fig. 2 illustrates the effect of different settings of the sliders 44, 46 in the intensity of a spectrum peak corresponding to a specific mass 58. The ordinate of the graph in the figure represents the intensity of the peak as determined by the amplification and recording system connected to the collector. The abscissa represent the settings of the slider 46 (connected to electrode P_2) as the percent of resistor 42 tapped off by the slider. The various solid curves of the diagram show how the intensity varies with the setting of the slider 44 of the other pusher electrode P_1 again in terms of the percentile ratio of the tapped off portion of the respective resistor 40. Particular settings of the slider 44 are noted on the graph adjacent the minimum point of the several solid curves and are designated "No. 1=30" etc. Fig. 2 shows that for each setting of the first pusher P_1, a curve representing the peak against the P_2 pusher control setting is obtained. Each of these solid curves has a maximum and the dotted curve A, which is drawn through the maxima of the several solid curves, has a shallow flat portion designated on the graph as the "operating point."

The maxima of the various individual curves represent sensitivities which are greater than is obtained if both pusher electrodes P_1 and P_2 are at the same potential. Dotted line curve B on the graph shows the sensitivity for various pusher settings wherein the pusher electrodes are operated at the same potential. This curve lies well below the operating point of curve A joining the maxima.

If the pusher electrode settings are such that the operating point is displaced appreciably from curve A, such as for example the point Q at which the settings are respectively 50 and 54 for the two pusher electrodes, slight voltage disturbance at the electrodes, induced for example by changes in contact potentials at the surface, will cause relatively large changes in sensitivity compared to any such change that will occur if the pusher electrode settings generally correspond to the ratio at the operating point of curve A.

Optimum operating conditions are obtained by operating at the point of curve A in the shallow flat region thereof designated as the "operating point." For this particular mass and with an ion source in which this data was obtained, the operating point corresponds to relative pusher settings of 60 and 70 respectively for pusher electrodes P_1 and P_2.

From the foregoing analysis it is evident that by establishing in the ion source a potential having a transverse as well as a longitudinal component, and in which the transverse component is normal to the major axis of the collimating apertures, improved sensitivity and stability can be obtained by suitable adjustment of the magnitude of this transverse component.

Other equally satisfactory means of establishing a potential across the ion source having both longitudinal and transverse components are shown in the several similar diagrams of Figs. 3, 4, and 5.

The mass spectrometer shown in the partial view of Fig. 3 has an ion source 10 including a single pusher electrode 60, a barrier or terminal electrode 62 giving access to an analyzer tube 64

and a second collimating electrode 66 interposed between the point of ionization, i. e. electron beam 68 and the terminal electrode 62. In this embodiment a transverse component of propelling potential is developed by means of electrodes 70, 71 mounted on opposite sides of the electron beam 68.

The voltage source for the several electrodes is similar to that shown in Fig. 1 including battery 30, potentiometer 32, switch 36, capacitor 34, resistor 38 and parallel coupled resistors 40, 42. In this embodiment an additional resistor 74 is connected to the junction of the parallel coupled resistors 40, 42 opposite the resistor 38, and a slider 75 connected to the pusher electrode 60. Electrodes 70, 71 are connected respectively to sliders 44, 46 of the resistors 40, 42 respectively and the transverse potential component may be adjusted by independent variation of the potentials impressed on these two electrodes in the manner described with relation to Fig. 1.

It should be emphasized that the propulsion of ions from the ionization chamber through the aperture in the terminal electrode 62 depends upon the potential differences established across the chamber between the point of ion formation, i. e. the electron beam, and this electrode and is independent of the number of intervening electrodes employed to establish this potential. The acceleration is likewise independent of the distribution of the longitudinal component of this potential. For example, the potential established between electrodes 66 and 62 may be, and generally is, considerably in excess of that established between the pusher 60 and electrode 66, and yet the over-all acceleration of the ions is solely a function of the potential difference between the pusher electrode and the final electrode.

It should also be emphasized that the beneficial effect of the transverse component is in the ability as a result of this component, to focus the ion beam as desired on the aperture of the final electrode, electrode 62 in Fig. 3. This is inherent in the application of a transverse potential component and holds true regardless of whether the component is developed by split pusher electrodes, by the electrodes 70, 71 preceding the first apertured electrode or by electrodes otherwise positioned in the ion source, as for example as shown in succeeding figures. The effect of the transverse potential on intensity, sensitivity and the minimization of the effects of surface charge is due solely to its effect on the ion beam as related to this aperture through which the ions are propelled into the analyzer tube. Any effect that the transverse component might have with relation to the aperture in preceding electrodes is only incidental to the effect on the ion beam with relation to the final aperture and may or may not be beneficial. Thus by impressing different potentials on the separate electrodes 70, 71 (Fig. 3) positioned intermediate the pusher electrode and the first apertured electrode 66, a transverse component is imparted to the field established across the ionization chamber which will have the same beneficial effects and for the same reasons as the transverse component produced by the two pusher electrodes of the embodiment of Fig. 1.

The ion source shown diagrammatically in Fig. 4 is similar in most respects to that shown in Fig. 3, including a pusher electrode 60, means (not shown) for forming an electron beam 68, a first apertured electrode 66 and a terminal or barrier

apertured electrode 62, giving access from the ion source to analyzer 64. In the ion source of Fig. 4 a pair of electrodes 78, 80 are mounted between the apertures in these electrodes so that the transverse potential component produced by application of different potentials to electrodes 78 and 80 will be normal to the major axis of the apertures in electrodes 66, 62.

Again the voltage supply circuit for impressing appropriate potentials on the various electrodes and the ion source is essentially similar to that shown in Fig. 1 including the battery 30, potentiometer 32, switch 36, capacitor 34, resistor 38, parallel coupled resistors 40, 42 connected in series between resistor 38 and a resistor 74, with the potential dividing network produced by the several resistors 38, 40, 42, 74 being connected across capacitor 34. In this instance pusher electrode 60 and the first apertured electrode 66 are connected to taps 82, 83, respectively, of resistor 74. The terminal electrode 62 is connected to the negative side of resistor 38, in this case ground, and the electrodes 78, 80 are connected respectively through taps 44, 46 to the parallel coupled resistors 40, 42 respectively.

The construction shown in Fig. 4 is essentially similar to that illustrated and described in greater detail in my co-pending application Serial No. 103,730, filed on July 8, 1949, now abandoned, insofar as electrode positioning within the ion source is concerned. With respect to the advantages accruing from production of a transverse component of the propelling field established in the ion source, the present application as well as the aforementioned co-pending application Serial No. 103,730 derived from discovery of the benefits of such a transverse potential as set forth in application Serial No. 513,528, of which the present application is a continuation.

The ion source shown in Fig. 5 differs from that shown in Fig. 4 only in the inclusion of an additional apertured electrode 86 interposed between first apertured electrode 66 and the terminal electrode 62. The voltage supply circuit in this embodiment is likewise substantially similar to that of Fig. 4 differing only in the inclusion of an additional tap 88 connecting the additional electrode 86 to resistor 74 for impression on the electrode 86 of a voltage intermediate the voltage impressed on electrodes 66 and 62.

There is no difference in the operation of the ion source as shown in the various illustrations, the desired transverse potential component being achieved in each case by application of different potentials to the split electrode whether the split electrodes be pusher electrodes, electrodes preceding the first apertured electrode or following the first apertured electrode. In some instruments, because of the construction thereof, use of split or dual pusher electrodes is preferred generally in circumstances where the collimating or apertured electrodes are so arranged as to preclude insertion of split electrodes therebetween. In other situations the transverse potential component is most conveniently achieved by electrodes disposed between the collimating electrodes, the effect in any case being the same and the inherent benefits of the transverse field being realized in each case.

I claim:

1. In a mass spectrometer having an ionization chamber provided with a first electrode having an ion outlet aperture, and means for impressing a potential across at least a portion of the chamber to the aperture for propelling ions from the chamber through the aperture, the combination which comprises a plurality of electrodes mounted in the chamber opposite the aperture, means for impressing different potentials between the respective electrodes of the plurality and the first electrode, means for introducing molecules into the space between the first electrode and the plurality of electrodes, and means for directing an electron beam into said space.

2. In a mass spectrometer having an ionization chamber provided with a first electrode having an ion outlet aperture, and means for impressing a potential across at least a portion of the chamber to the aperture for propelling ions from the chamber through the aperture, the combination which comprises a plurality of electrodes mounted in the chamber opposite the aperture, means for impressing different potentials between the respective electrodes of the plurality and the first electrode, means for varying the potentials thus impressed, means for introducing molecules into the space between the first electrode and the plurality of electrodes, and means for directing an electron beam into said space.

3. In a mass spectrometer having an ionization chamber provided with a first electrode having an ion outlet aperture, and means for impressing a potential across at least a portion of the chamber to the aperture for propelling ions from the chamber through the aperture, the combination which comprises a plurality of electrodes mounted in the chamber opposite the aperture, and respectively on opposite sides of the axis thereof, means for impressing different potentials between the respective electrodes of the plurality and the first electrode, means for varying at least one of said potentials, means for introducing molecules into the space between the first electrode and the plurality of electrodes, and means for directing an electron beam into said space.

4. In a mass spectrometer having an ionization chamber provided with a first electrode having an ion outlet aperture, and means for impressing a potential across at least a portion of the chamber to the aperture for propelling ions from the chamber through the aperture, the combination which comprises a plurality of electrodes mounted in the chamber opposite the aperture and disconnected from each other within the chamber, means for impressing potentials between the respective electrodes of the plurality and the first electrode, means for altering the ratio between said potentials, means for introducing molecules into the space between the first electrode and the plurality of electrodes, and means for ionizing the molecules in said space.

5. In a mass spectrometer having an ion source in which ions are produced from molecules, an analyzer chamber, and a communicating aperture between the analyzer chamber and the ion source and through which the ions produced in the ion source are introduced into the analyzer chamber, the combination which comprises a plurality of electrodes disposed in the ion source, means for introducing molecules into the ion source whereby ions formed from said molecules will be subject to the field produced by said plurality of electrodes, and means for producing between the electrodes an electrical potential having a component parallel to the longitudinal axis of the aperture for forcing the ions through the aperture into the analyzer chamber and a component transverse to the major axis of the aperture.

6. In ion source for a mass spectrometer having means for receiving into the source a sample to be analyzed, means within the source for ionizing the sample and an outlet electrode having an aperture for egress of ions from the ion source, the combination which comprises a plurality of electrodes disposed in the ion source and means for producing between said electrodes, including said outlet electrode a potential having a component parallel to the direction of ion flow through the aperture in said outlet electrode and a component normal to the major axis of said aperture.

7. In an ion source for a mass spectrometer having means for receiving into the source a sample to be analyzed, means within the source for ionizing in an ionizing region molecules of the sample to be analyzed, an outlet electrode having an aperture for egress of ions from the source, and at least one collimating electrode disposed between said ionizing region and the outlet electrode, the combination comprising at least one pair of electrodes disposed on opposite sides

of the ion source in transverse alignment and means for impressing independently variable voltages on said pair of electrodes to develop in the source a potential transverse to the major axis of the aperture in the outlet electrode.

HAROLD W. WASHBURN.

REFERENCES CITED

The following references are of record in the file of this patent:

UNITED STATES PATENTS

Number	Name	Date
2,370,631	Berry	Mar. 6, 1945

OTHER REFERENCES

Mass-Spectra and Isotopes, by F. W. Aston, 1933, pages 28, 29, and 69, published by Edward Arnold & Co., London, England.

A Mass-Spectrographic Study of the Isotopes of Hg, Xe, Kr, Be, I, As, and Cs, by Alfred O. Nier, pages 933–937.

Physical Review, vol. 52, Nov. 1, 1937.