Aug. 24, 1943. C. BIRDSEYE ET AL 2,327,978

PROCESS OF MAKING REFLECTING ELECTRIC LAMPS

Original Filed Nov. 25, 1938

Fig. 1.

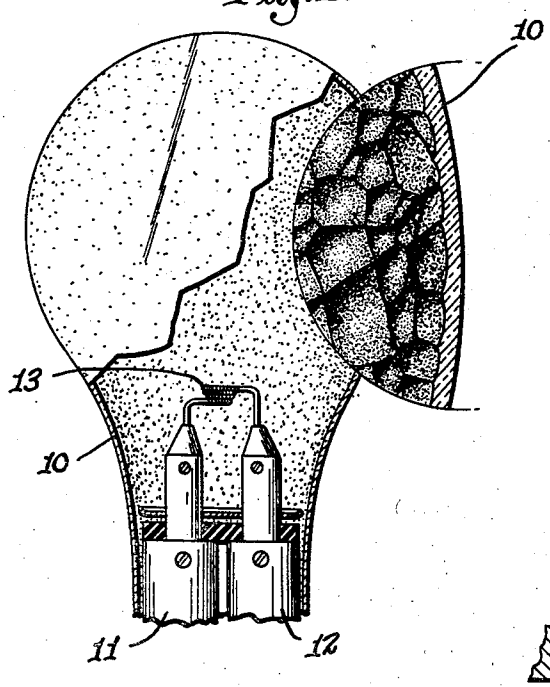

Fig. 2.

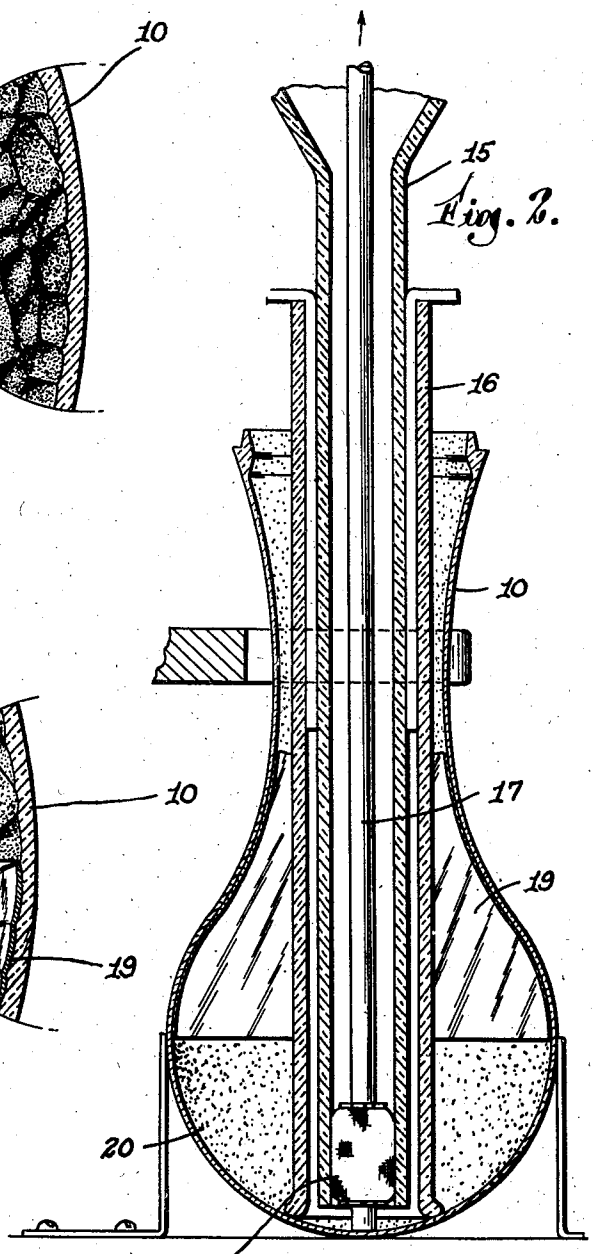

Fig. 3.

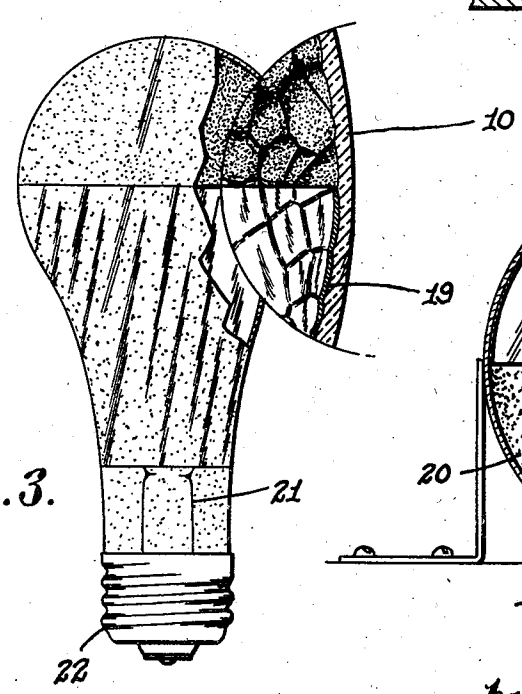

Inventors
Clarence Birdseye
and Pincus Daren.
by Henway & Witter
Attorneys

Patented Aug. 24, 1943 2,327,978

UNITED STATES PATENT OFFICE

2,327,978

PROCESS OF MAKING REFLECTING ELECTRIC LAMPS

Clarence Birdseye, Gloucester, Mass., and Pincus Deren, Milwaukee, Wis., assignors to Birdseye Electric Corporation, Gloucester, Mass., a corporation of Massachusetts

Original application November 25, 1938, Serial No. 242,216. Divided and this application March 14, 1940, Serial No. 323,928

4 Claims. (Cl. 117—35)

The present invention relates to electric lamps and consists in an improved reflecting lamp having certain advantages over those heretofore available. The invention includes within its scope the process herein disclosed of producing such improved reflecting lamps. In reflecting electric lamps in which the light source is hooded by a reflecting surface formed upon the bulb there is a tendency for the reflected rays to project a shadow of the mount and filament supports or an image of the incandescent filament and to produce thereby a light pattern that is irregular in intensity and unpleasant to the eye. Heretofore this objectionable tendency has been eliminated to some extent by frosting the transmitting area of the bulb either on the inside or the outside. The frosted transmitting area diffuses the light emitted by the bulb so as to eliminate or largely reduce uneven light intensity patterns cast on the illuminated area.

There is however, a serious objection incident to the practice above discussed. When practically all the light rays from the incandescent filament are directed by the reflecting surface through the transmitting area of the bulb the concentration of light is so great that the glass of the bulb in this area, when frosted in the usual commercial manner, becomes intensely brilliant. This frosted transmitting area even becomes so bright that, particularly in lamps of high wattage, it is unpleasant to observe directly despite the fact that the filament may be completely hooded by the opaque reflecting portion of the bulb. In fact, a lamp frosted for direct illumination in the customary manner when viewed from the side is very much brighter throughout its transmitting area than a similar lamp without any frosting.

In our prior Patent No. 2,144,673, granted January 24, 1939, of which the present application is a continuation as to all common subject matter, we have disclosed a method of preventing the formation of shadows and bright images in the illuminated areas by applying a diffusing reflector to the surface of the bulb. In one aspect the present invention consists in an improvement over that disclosed in our said prior application, viz., we control the diffusion of the reflected light by a combination of two expedients each however, modified to an extent that would make either of them alone inadequate for the purpose, and which at the same time, avoids certain very real difficulties inherent to each of said expedients if unmodified.

In one aspect the present invention consists in a reflecting electric lamp in which substantially the entire inner surface of the bulb is processed so that it presents a continuous contour of smooth rounded depressions, the reflecting coating being applied to this surface in the desired areas as metal deposited or evaporated directly upon the processed surface of the bulb and thereby given a diffusing reflecting characteristic. The configuration imparted to the bulb by the suggested treatment is hardly adequate to give to the metal deposited upon it a pronounced diffusing character sufficient to eliminate shadows, nor will the same treatment of the transmitting area accomplish this end by itself. However, by combining the diffusing reflecting surface thus produced and the diffusing transmitting surface in cooperative relation, so that their individual effects are additive, the final result is highly satisfactory in eliminating shadows in the illuminated area. Moreover, this is accomplished without causing the transmitting area to glow with a high degree of brilliancy. Further, the processed transmitting area diverts but a slight amount of light as compared to the amount which is lost in a corresponding area which has been frosted by the commercial processes heretofore practiced and there is practically no loss of light within the lamp at any point of diffusing reflection since the metallic coating preferably may be applied to the inner surface of the bulb so that no loss occurs on account of the passage of light through the glass to and from an exterior reflecting surface.

Our invention includes within its scope a novel and improved process of producing the reflecting bulb above discussed. The process of our invention is characterized by first processing the inner surface of the bulb in the manner described, then applying a metallic reflecting coating to the internal processed surface and finally removing the metal coating by means of a chemical solution to define a transmitting area in the lamp. Heretofore it has been the general practice when applying a reflecting coating of silver or aluminum to the internal surface of lamp bulbs to coat substantially the entire bulb surface and then to remove the metal coating by mechanical means from those areas that are to transmit light. It is extremely difficult to remove a metallic coating by mechanical means from a glass surface processed and so minutely roughened in the manner of our invention. We accordingly contemplate the removal of the metal coating by chemical solution, for example, by

nitric acid in the case of silver coating or caustic soda in the case of aluminum coating.

These and other features and characteristics of our invention will be best understood and appreciated from the following description of one manner of practicing the process of our invention and an illustrative example of a reflecting electric lamp embodying our invention. In the drawing—

Fig. 1 is a view in elevation, with parts broken away, suggesting the step of depositing a metallic reflecting coating upon the inner surface of a processed bulb, and includes a section of the bulb wall as seen magnified approximately 500 times in the field of a microscope,

Fig. 2 is a similar view suggesting the step of removing the metallic coating from the transmitting area of the coated bulb, and

Fig. 3 is a view in elevation of the complete lamp, and also includes a section of the bulb wall as seen in the field of a microscope.

The first step in the process of our invention is to provide substantially the entire inner surface of the bulb with a particular configuration of contour which, for want of a better term, we will call a "shell surface." By this we mean a contour of shallow rounded depressions or hollows which covers substantially the whole surface, and has no deep valleys, no sharp peaks and no flat facet faces, but merely gently scooped and rounded depressions. The individual depressions or hollows are of varied size, irregular in shape and appear to be bounded by straight or slightly curved lines extending in all directions and meeting in vertices sometimes in pairs and sometimes in greater numbers. In Fig. 1 the characteristic surface is represented as actually observed in the field of a microscope at a magnification of 300 to 500. Heretofore frosting imparted to bulbs has been characterized by deep cavities with steep sides which under the microscope look in some places like the facets of crystals and in other places present sharply concave surfaces. These actually act to reflect the light back and forth from side to side of the pits or cavities and create much greater disturbances and absorption of the light than does the type of configuration employed in accordance with our invention. Our novel configuration of surface, on the contrary, does not substantially interfere with the directional characteristics of the lamp, that is to say, the reflecting surfaces of the lamp define the beam in which the light is emitted and the reflecting or diffusing effect of the shell surface is not such as to deflect any substantial amount of light outside this beam. The effect we desire is a slight differential refraction of the light passing through the transmitting section of the hub in a heterogeneous manner, that is, the emergence angle of each ray is only slightly different from the straight line it would follow in emerging from an unprocessed bulb.

The present commercial process of frosting bulbs is fully disclosed in U. S. Letters Patent No. 1,687,510, October 16, 1928, Pipkin. The process of that patent involves the use of two different frosting solutions of the same composition, the second used being merely weaker than the first. In providing the shell surface characteristic or our invention, we may take a bulb frosted or etched in accordance with the complete process of the Pipkin patent and strip the frosting by using a stripping solution, for example, a 25% hydrofluoric acid solution having added thereto 5% ammonium bifluoride and preferably used hot. The proportions given are not critical, but are merely illustrative of one satisfactory stripping solution. The effect of this solution in the bulb is to smooth out the frosted surface of the glass into approximately shallow curved recesses of the general shape shown in Fig. 1 of the drawing. Alternatively the desired shell surface may be produced by first treating the interior of the bulb with any commercial frosting solution and then processing it in the manner already explained.

It will be understood that the stripping solution used in the process of our invention is not a frosting or an etching solution and is not effective for such purposes. Moreover the shell surface we produced is characteristically different from any frosted surface known before our discovery and as such constitutes an important aspect of our invention.

Having first provided the desired shell surface in the bulb, the next step of the process is to apply a metallic reflecting coating thereto. One process of applying such metallic coating is disclosed in U. S. Letters Patent No. 2,237,328, dated April 8, 1941, and granted on our copending application, Ser. No. 101,943, filed February 19, 1938. In Fig. 1 is illustrated the step of vaporizing silver or aluminum to form a reflecting coating in the manner more fully disclosed in our said application. The processed bulb **10** is inverted over a pair of electrodes **11** and **12**, sealed and exhausted. Between the electrodes is mounted a boat or receptacle **13** in which is placed a charge of metal for the coating. The exhausted bulb is heated and the metal charge reduced to a molten state which the bulb is maintained under vacuum so that any gases evolved from the metal charge are immediately removed from the bulb. The charge in the boat **13** is then quickly raised to the vaporizing point of the metal by electrical energy transmitted to the electrodes **11** and **12**. The metal is thus flashed and deposited upon the shell surface of the inner walls of the exhausted bulb.

In this operation a diffusing reflecting surface is formed of the general character disclosed in our prior Patent No. 2,144,663 already identified. The structure of this reflecting surface is indicated in Fig. 3 of the drawing from which it will be seen that the gently sloping rounded hollows and depressions of the shell surface are now coated with a thin deposit of metal **19** thereby forming a reflector which is mildly diffusing, that is to say, in which the reflected rays are slightly but not violently deflected from the normal paths which they would follow if specularly reflected from the surface of unprocessed walls. Our object is to provide a reflecting surface having a relatively slight diffusing action which is combined in its effect with the relatively slight diffusing action of the shell surfaced transmitting portion of the lamp. The cooperative effect of these two factors produces the desired results in eliminating shadows and bright images in the area illuminated by the lamp.

The next step in our process consists in removing the reflecting coating from a selected area of the bulb to define a shell surfaced transmitting portion therein. The metallic coating may be removed in accordance with the process of our prior Pat. No. 2,247,432, granted July 1, 1941. In that process a solvent solution is applied to those portions of the bulb from which

it is desired to remove the metallic coating. We have suggested in Fig. 2 the step of removing metallic coating from the bowl end of a bulb intended for use in direct lighting. The coated bulb 10 is supported in upright position and the solvent solution is supplied through a vertical tube 15 surrounded by a larger tube or casing 16 and containing concentrically a smaller withdrawing tube 17. A filter 18 surrounds the lower end of the tube 17 within the delivery tube 15 and acts to prevent splashing of the solvent solution as it is supplied to the bulb up to substantially the level of its maximum diameter. If silver is employed as a coating for the bulb an acid solution, such as nitric acid, may be delivered through the tube 15. If aluminum is used as the metal of the coating a strongly alkaline solution may be similarly employed. As soon as the coating is dissolved the solution is withdrawn through the inner tube 17 and the bulb immediately washed out, with the result that a sharp line of demarkation is formed between the silver coating 19 and the bare shell surface transmitting portion 20 of the bulb.

Having completed the shell processing and metallic coating of the selected areas of the bulb in the manner above explained the bulb may now be employed in the manufacture of an electric reflecting lamp by following the conventional steps of manufacture. The mount 21 and filament are sealed into the bulb neck with the filament substantially hooded by the reflecting coating 19. Preferably the filament will be of the coiled coil type supplying a concentrated light source. The bulb is then exhausted, gas filled if desired, and sealed preparatory to being equipped with a metal base 22 of any desired commercial construction.

It will be understood that the shallow rounded depressions making up the shell surface of the bulb are actually infinitessimal in size. The processed surface is of a somewhat lustrous light gray or pearl color in appearance and noticeably more transparent than a frosted surface. The surface as illustrated in Figs. 1 and 3 is drawn from microphotographs taken at a magnification of 500 diameters and then enlarged in the reproduction.

In addition to providing an electric reflecting lamp supplying a substantially uniform light pattern and one in which the transmitting portion of the lamp is not objectionably brilliant when the lamp is in use, we have substantially increased the illuminating efficiency of the lamp by reducing the amount of light absorbed and diverted in its transmitting portion as compared with lamps heretofore commercially available. The intensity of illumination derived from a lamp constructed in accordance with our invention is about 16% greater than that derived from a commercially frosted lamp of identical size and rating.

While it is not practicable completely to remove a metallic coating from a shell surface by mechanical means, it is possible by using a scraping tool to form a translucent spiral or other markings in the coated area of a bulb processed as herein disclosed if it should be desired to secure the luminous appearance of the coated portion of the bulb as disclosed in the prior patent of Birdseye No. 2,074,888, March 23, 1937.

The process of our invention is herein illustrated as carried out upon a pear-shaped bulb, but it may, of course, be usefully applied to the manufacture of any lamp having a metallic reflecting coating directing light rays through a limited transmitting area.

The present application is a division of our copending application, Serial No. 242,216, filed November 25, 1938, now Patent No. 2,204,399, dated June 11, 1940, which itself was filed as a continuation as to all common subject matter of our application Serial No. 47,581, filed October 31, 1935, now Patent No. 2,144,673, dated January 24, 1939.

Having thus described our invention what we claim as new and desire to secure by Letters Patent of the United States is:

1. A process of making reflecting electric lamps, which includes the steps of chemically etching and then stripping the inner surface of a bulb to provide a shell surface thereon, that is to say, a surface which when observed at a magnification of 300 to 500 appears to comprise shallow, rounded, contiguous depressions or hollows, varied in size, irregular in shape and bounded by slightly curved and straight lines extending in all directions and meeting at vertices sometimes in pairs and sometimes in greater numbers, applying a reflecting metallic coating over the processed area of the bulb surface, and then chemically dissolving part of the coating to provide a translucent area in the bulb, entirely free from the reflecting coating.

2. A process of making reflecting lamps, which includes the steps of frosting the inner surface of a bulb and subsequently stripping the bulb surface to produce a relatively smooth irregular contour of shallow rounded depressions, applying a metallic reflecting coating to the irreguiar surface thus produced, and then chemically dissolving and removing the metallic coating from a defined area of the processed bulb surface to form an uncoated light-transmitting portion in the bulb.

3. The process of making reflecting electric lamps which includes the steps of chemically etching and stripping the inner surface of a bulb to provide a shell surface thereon, that is to say, a glass surface which when observed at a magnification of 300 to 500 appears to comprise shallow, rounded, contiguous depressions or hollows, varied in size, irregular in shape and bounded by slightly curved and straight lines extending in all directions and meeting at vertices sometimes in pairs and sometimes in greater numbers, and then applying to said surface a metallic reflecting medium thereby forming a diffusing reflecting surface in the lamp.

4. A process of making reflecting electric lamps which includes the steps of applying a metallic reflecting coating to the inner surface of the bulb thereby forming a reflecting surface therein, and prior to the application of said metallic coating, forming a transmitting area for the reflected rays by chemically etching and then stripping the inner surface of the bulb to present a glass surface which when observed at a magnification of 300 to 500 appears to comprise shallow, rounded, contiguous depressions or hollows, varied in size, irregular in shape and bounded by slightly curved and straight lines extending in all directions and meeting at vertices sometimes in pairs and sometimes in greater numbers, the said transmitting portion of the bulb being effective to transmit more than 25% of the light which would be transmitted by a similar transmitting area of clear glass.

CLARENCE BIRDSEYE.
PINCUS DEREN.

CERTIFICATE OF CORRECTION.

Patent No. 2,327,978. August 24, 1943.

CLARENCE BIRDSEYE, ET AL.

It is hereby certified that error appears in the printed specification of the above numbered patent requiring correction as follows: Page 2, first column, line 59, for "hub" read --bulb--; and second column, line 27, for "Ser. No. 101,943" read --Ser. No. 191,493--; and that the said Letters Patent should be read with this correction therein that the same may conform to the record of the case in the Patent Office.

Signed and sealed this 12th day of October, A. D. 1943.

(Seal)

Henry Van Arsdale,
Acting Commissioner of Patents.