(No Model.)

O. G. TABER.

APPARATUS FOR DUMPING WAGONS.

No. 590,601. Patented Sept. 28, 1897.

FIG. 1.

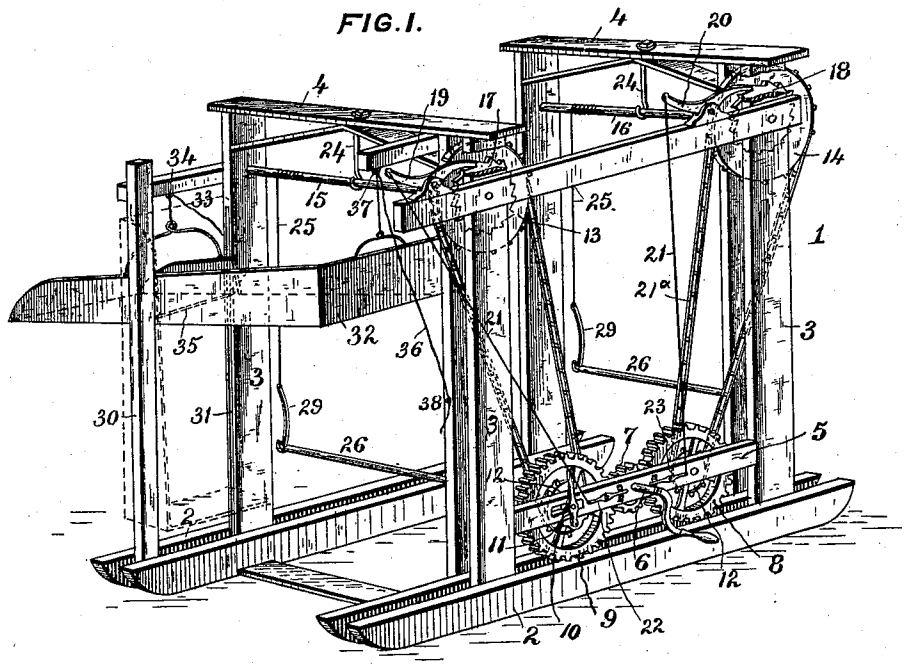

FIG. 2

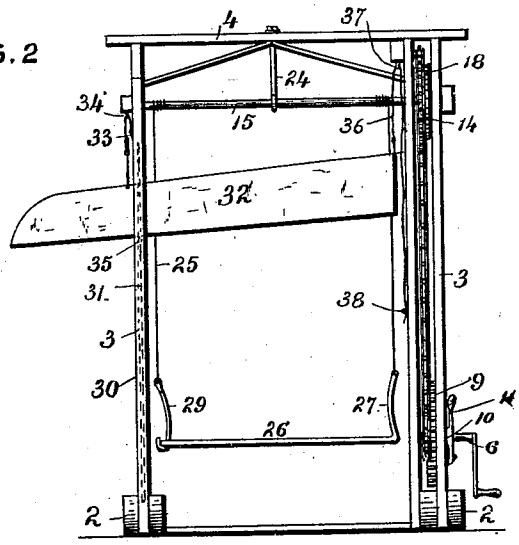

FIG. 3.

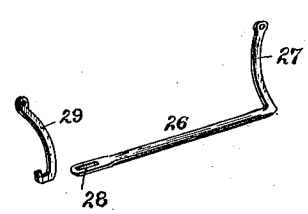

ATTEST.

W. D. Converse

Geo. M. Copenhaver

INVENTOR.

Otis G. Taber.

By J. Henry Kaiser.

Attorney.

THE NORRIS PETERS CO., PHOTO-LITHO., WASHINGTON, D. C.

UNITED STATES PATENT OFFICE.

OTIS G. TABER, OF HOLTON, KANSAS.

APPARATUS FOR DUMPING WAGONS.

SPECIFICATION forming part of Letters Patent No. 590,601, dated September 28, 1897.

Application filed April 17, 1897. Serial No. 632,635. (No model.)

To all whom it may concern:

Be it known that I, OTIS G. TABER, a citizen of the United States of America, residing at Holton, Jackson county, Kansas, have invented certain new and useful Improvements in Apparatus for Dumping Wagons, of which the following is a specification.

This invention relates to improved apparatus for dumping wagons, and has for its object to provide a simple, convenient, and efficient device of the nature described by means of which the wagon-body may be lifted from the running-gear, elevated, and its contents dumped into a chute which conveys the same to a car, crib, or other receptacle.

To this end my invention consists in the novel features and in the construction, arrangement, and combination of parts hereinafter described, and particularly pointed out in the claims following the description, reference being had to the accompanying drawings, forming a part of this specification, wherein—

Figure 1 is a perspective view of my improved device. Fig. 2 is an end view thereof, and Fig. 3 is a detail view illustrating the manner in which the arms which support the wagon-body are jointed together.

Referring to the drawings, the numeral 1 indicates a frame consisting of sills 2, uprights 3, and top beams 4. Fixed to the uprights 3, upon one side of the machine and slightly above the sills, is a bar 5, in which is journaled a crank-shaft 6, having mounted thereon a pinion 7. The pinion 7 is adapted to engage two gear-wheels 8 and 9, also journaled in said bar, the wheel 9 being mounted in a sliding journal-box 10, under the control of a lever 11, whereby said wheel may be thrown into and out of engagement with the pinion 7. Sprocket-wheels 12 are formed on or attached to the gear-wheels 8 and 9 and are geared to corresponding sprocket-wheels 13 and 14, which are fixed on the ends of shafts 15 and 16, journaled in the upper ends of the uprights 3. Fixed or formed on the sprocket-wheels 13 and 14 are ratchet-wheels 17 and 18, which are engaged by pawls 19 and 20, and which operate to prevent any reverse or retrograde movement of the shafts 15 and 16. To the free ends of said pawls are attached cords or ropes 21, which at their other ends are connected to levers 22 and 23, pivoted to the bar 5.

Depending from the top beams 4 are hooked bolts 24, which embrace the central portions of the shafts 15 and 16 and operate to support the latter and prevent their sagging between the ends. Ropes or cables 25 are wound about the shafts 15 and 16, and at their lower ends are attached to yokes, each comprising a rod or bar 26, bent up at a right angle at one end, as at 27, and at its opposite end perforated, as at 28, (see Fig. 3,) in which perforation is inserted the bent or hooked end of an arm 29. The arms 27 and 29 are curved inwardly toward each other, as shown, the purpose of which formation is to cause said arms to tightly embrace or squeeze toward each other the sides of the wagon-body, for it will be apparent that when the wagon-body is raised from between the wagon-standards the sides would lack the necessary support were not provision of some sort provided.

Secured to the projecting end of one of the sills 2 is a standard 30, the inner edge of which and the edge of the adjacent edge of the upright 3 are grooved, as at 31. A chute 32 is suspended between the standard 30 and the adjacent upright by means of a cord or rope 33, which passes through a pulley 34 and is fixed at its end to any convenient portion of the frame. A rod 35 is attached to the under side of the chute and at its opposite end engages and travels in the grooves 31, thus forming a hinged or pivotal connection between the end of the chute and the frame. A cord or rope 36 is attached to the opposite end of the chute and passes over a pulley 37, and at its end is adapted to be belayed to a cleat 38, attached to the frame 1.

The operation of my improved hoisting and dumping apparatus is as follows: The device is placed beside a car, crib, or other receptacle in which the material is to be deposited and the chute 32 is lowered into a perpendicular position by releasing the rope 36. The loaded wagon is then drawn between the uprights 3 and the yokes are placed beneath the front and rear ends of the wagon-body by passing the rods 26 under the body from one side and then attaching the arms 29 to the perforated ends of the rods. By turning the

crank 6 the shafts 15 and 16, through the medium of the sprocket-wheels and chains before described, are rotated and wind up the ropes 25 and thus elevate the wagon-body from the running-gear. When the wagon-body has been elevated a sufficient distance, the gear-wheel 9 is thrown out of engagement with the pinion 7. The chute is now raised by the rope 36 and rests beneath the tail end of the wagon. By continuing the winding operation the front end of the wagon is raised by the gear-wheel 8, chain 21^a, wheel 14, and shaft 16, and by removing the tail-board of the wagon its contents run down thereform into the chute, and from the latter into the car, crib, or other receptacle. By jointing the yokes in the manner shown and described their insertion beneath the wagon-body is facilitated, and when so placed they adjust themselves to the body in the manner best suited for raising the same without injury thereto.

Having described my invention, what I claim is—

1. The combination with a frame, of two shafts journaled in the opposite ends thereof, means for rotating said shafts yokes suspended from said shafts and arranged to support a wagon-body, and a chute arranged transversely to one end of said frame in the plane traversed by the tail end of the wagon when the latter is raised and lowered, said chute being pivotally suspended at its discharge end from the said frame and means for raising and lowering the other end of the chute, substantially as described.

2. The combination with the frame, of two shafts journaled in the opposite ends thereof, means for rotating said shafts and detachably-jointed yokes suspended from said shafts each of said yokes consisting of a rod 26 and a side arm 27 formed integrally with one another and a side arm 29 having a lower hooked end detachably engaging the perforated end of the rod 26, substantially as described.

3. The combination with the frame, of two shafts journaled in the opposite ends thereof, means for rotating said shafts and detachably-jointed yokes suspended from said shafts each of said yokes consisting of a rod 26 and a side arm 27 formed integrally with one another and a side arm 29 having a lower hooked end detachably engaging the perforated end of the rod 26, said side arms 27 and 29 being inwardly curved or bowed to bear against and support the sides of the wagon-body, substantially as described.

4. The combination with a frame of two shafts journaled in the opposite ends thereof, yokes suspended from said shafts and arranged to support a wagon-body means for rotating said shafts to elevate the yokes, a chute arranged transversely to one end of said frame in the plane traversed by the tail end of the wagon when the latter is raised and lowered, a rod attached to the chute near one end and arranged to travel in vertical grooves formed in one side of the frame, and forming a pivot about which the chute may be oscillated, means for adjustably suspending the said end of the chute, and means for raising and lowering the opposite end of the chute, substantially as described.

5. The combination with a frame, of two shafts journaled in the opposite ends thereof, means for rotating said shafts, cables wound about said shafts and provided with means for attachment to a wagon-body, of a chute arranged transversely to one end of said frame, means for adjustably pivoting one end of said chute to the frame, and means for raising and lowering the other end of said chute, substantially as described.

In testimony whereof I have hereunto set my hand in presence of two subscribing witnesses.

OTIS G. TABER.

Witnesses:
FRANK S. SCOTT,
GUS. A. BEAUCHUMP.