United States Patent [19]

Streicher

[11] **3,857,654**

[45] **Dec. 31, 1974**

[54] **ADJUSTABLE DIAMETER STATOR FOR EXCENTRIC HELICAL SCREW PUMP**

[75] Inventor: **Max Streicher,** Wangen/Allgau, Germany

[73] Assignee: **Fordertechnik Streicher GmbH,** Schlosshof, Germany

[22] Filed: **Jan. 22, 1973**

[21] Appl. No.: **325,748**

[30] **Foreign Application Priority Data**

Jan. 21, 1972 Germany 2202763
Sept. 5, 1972 Germany 2243479

[52] **U.S. Cl.** **418/48,** 418/108, 418/153
[51] **Int. Cl.** **F04c 1/06**
[58] **Field of Search** 418/48, 108, 152, 153, 418/156

[56] **References Cited**

UNITED STATES PATENTS

3,028,812	4/1962	Scotti	418/48
3,084,631	4/1963	Bourke	418/108 X
3,435,772	4/1969	Schlecht	418/48

FOREIGN PATENTS OR APPLICATIONS

218,386	4/1961	Austria	418/48
96,155	5/1960	Norway	418/48

Primary Examiner—C. J. Husar
Assistant Examiner—Leonard Smith
Attorney, Agent, or Firm—Joseph A. Geiger

[57] **ABSTRACT**

An adjustable diameter stator assembly for an eccentric helical screw pump in which the resiliently yielding stator sleeve is radially compressible in a uniform manner with the aid of a plurality of parallel, closely spaced segmental slats arranged on the circumference of the stator sleeve, the slats allowing for their being drawn together under diameter reduction. The radial compression, which is obtained by one of various mechanical adjusting means, is transmitted to the segmental slats through anti-friction type roll bodies which press against the slats, the compression forces being distributed over the roll bodies through a compression transmitting means such as a casing, sleeves, clamps, and the like.

33 Claims, 12 Drawing Figures

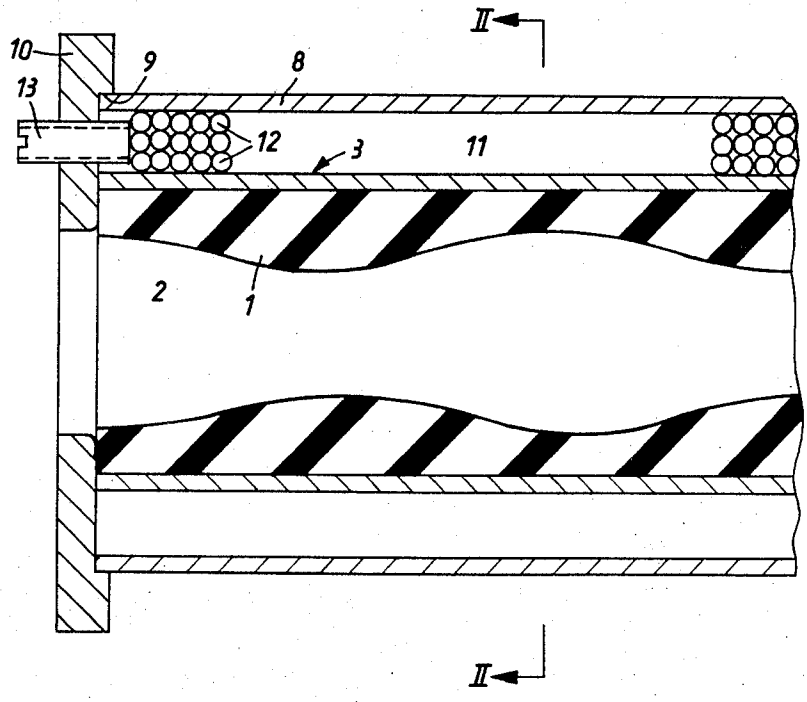

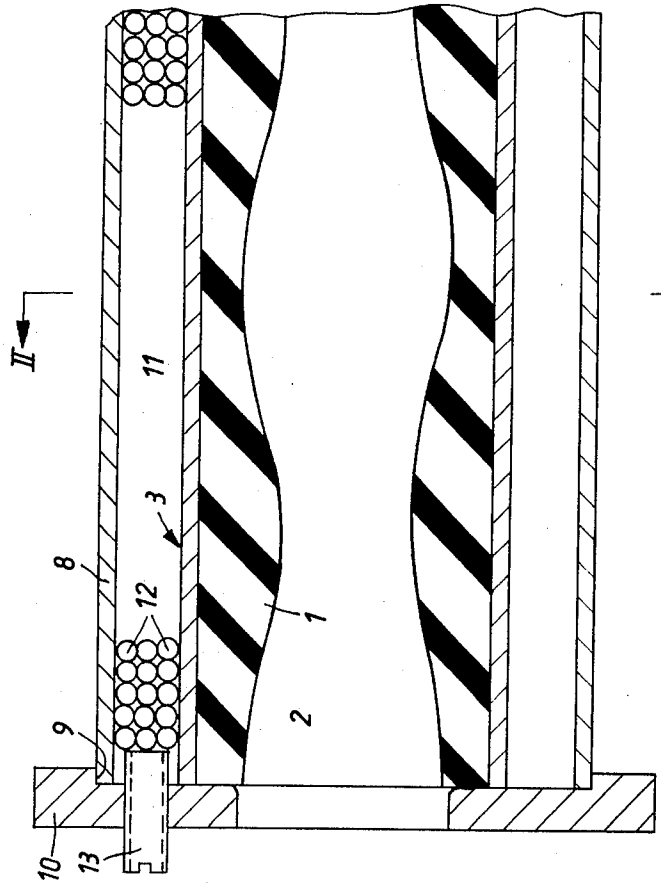

Fig. 1

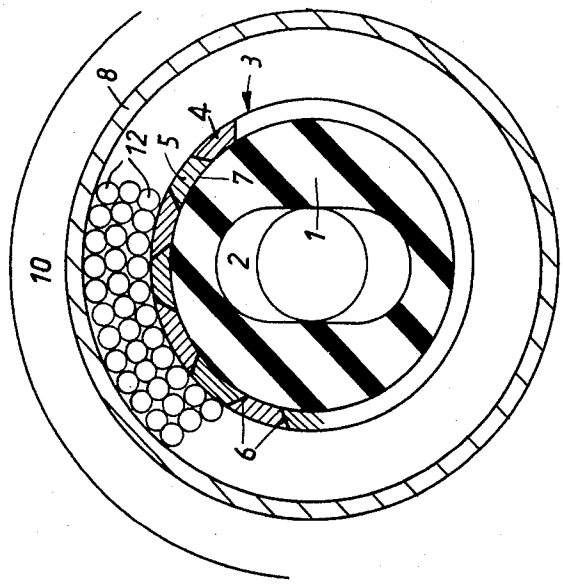

Fig. 2

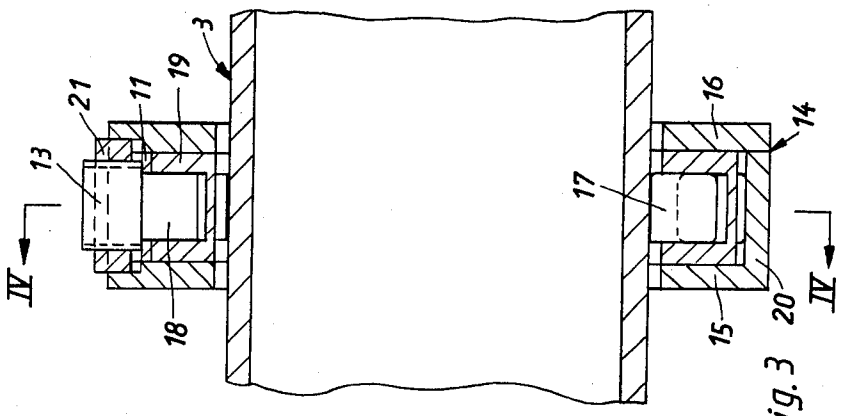

Fig. 3

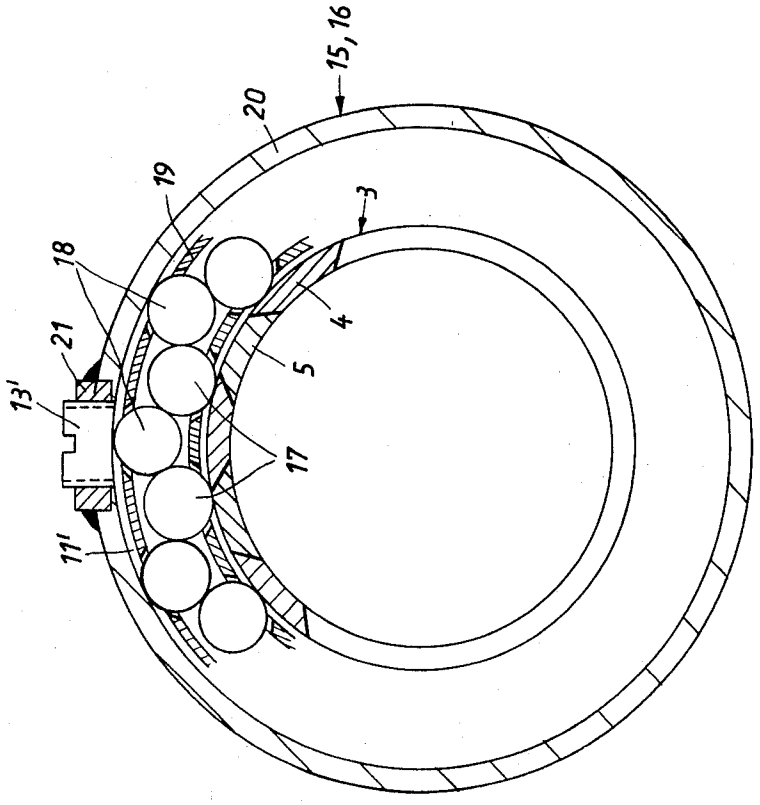

Fig. 4

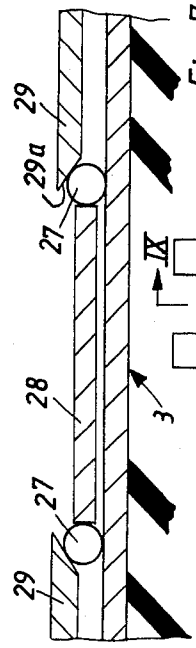

Fig. 7

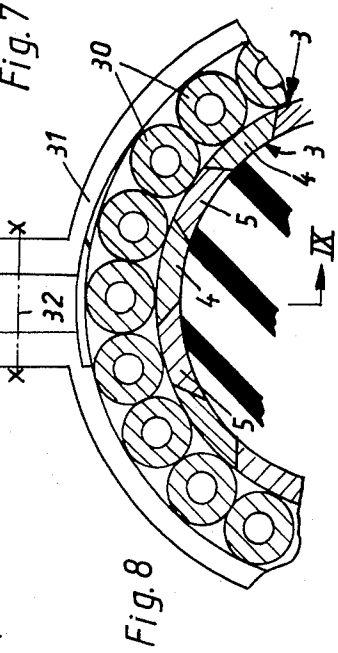

Fig. 8

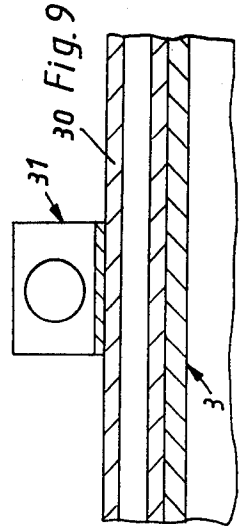

Fig. 9

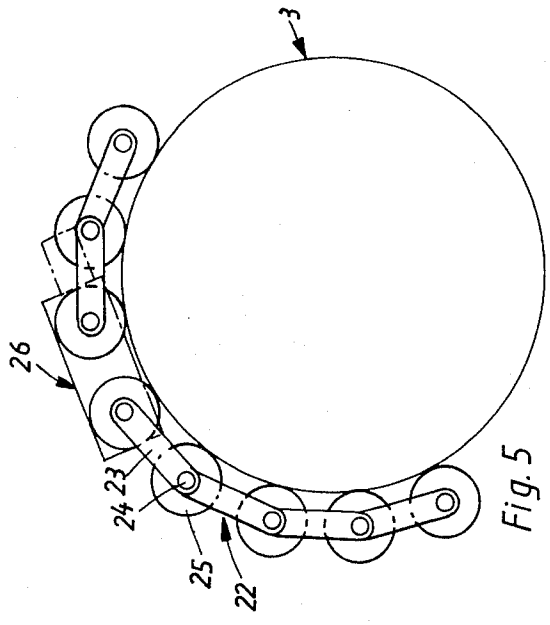

Fig. 5

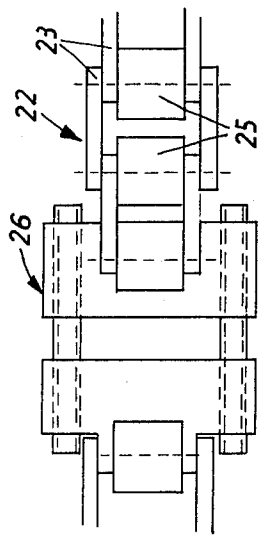

Fig. 6

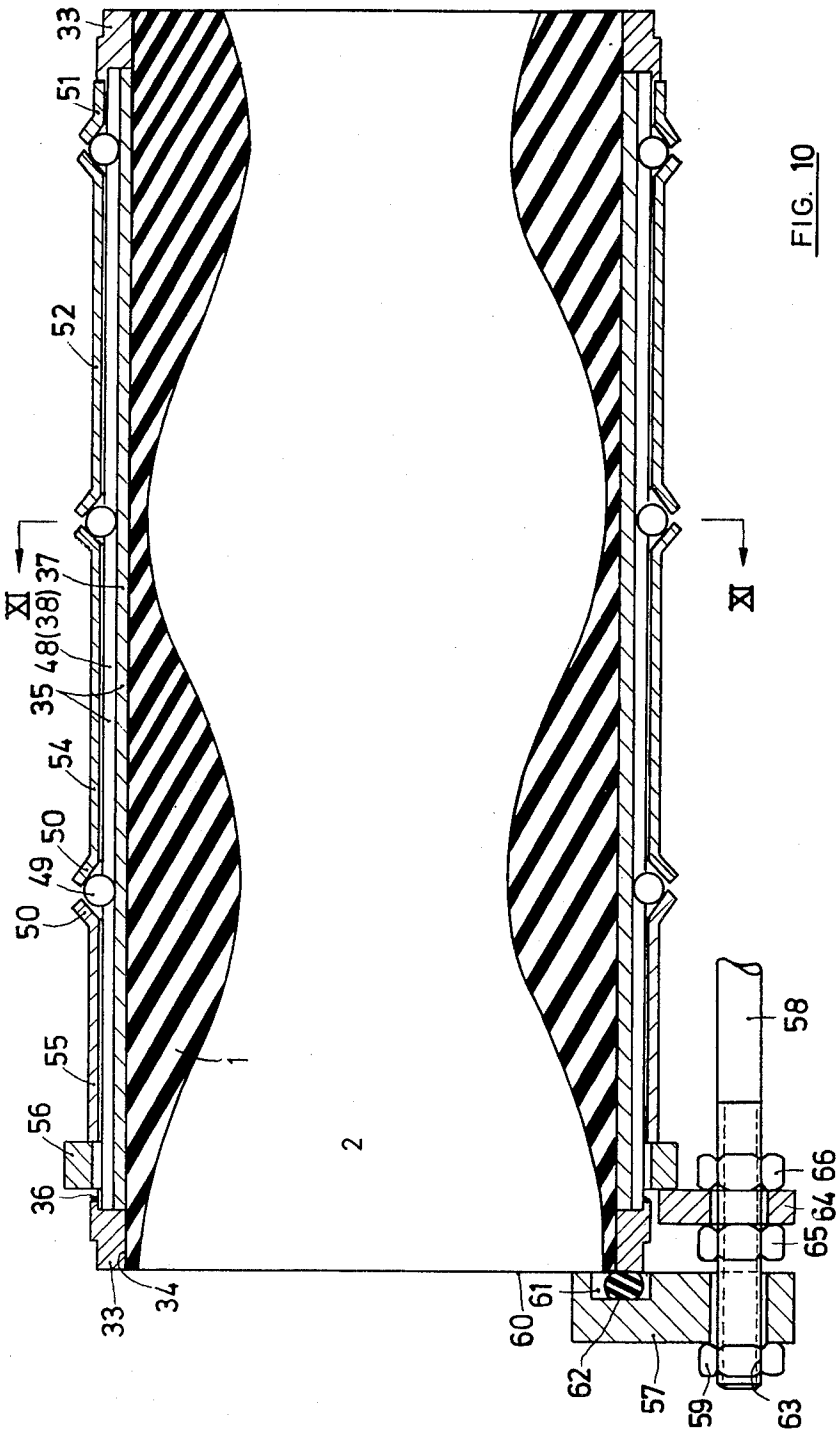
33
51
52
XI
37
48(38)
35
54
50
49
50
55
56
36
33
34
1
2
XI
58
66
64
65
60
61
62
57
59
63

FIG. 10

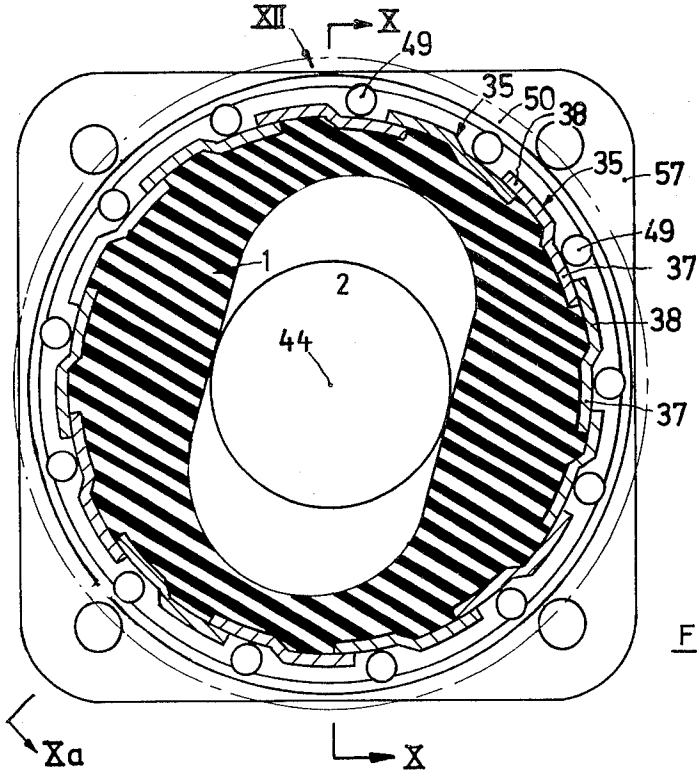
XII
X
49
35
50
38
35
57
49
37
38
37
1
2
44
Xa
X

FIG.11

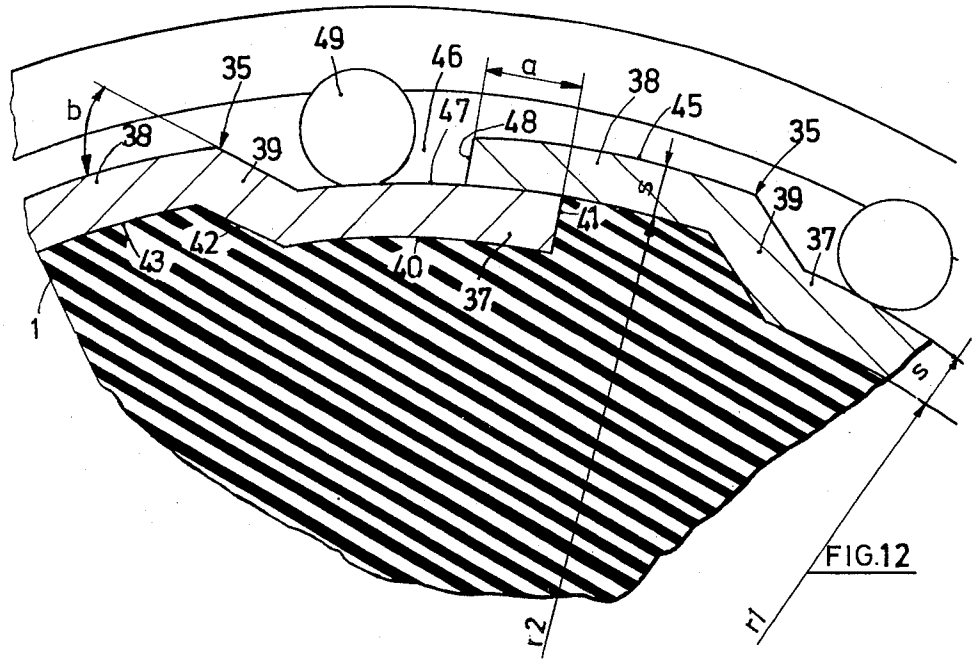
49
46
a
35
38
45
b
38
39
47
48
35
39
37
41
s
42
43
40
37
1
s
r2
r1

FIG.12

ADJUSTABLE DIAMETER STATOR FOR EXCENTRIC HELICAL SCREW PUMP

BACKGROUND OF THE INVENTION

1. Field of the Invention

The present invention relates to eccentric helical screw pumps, and in particular to helical screw pumps having a resiliently compressible stator sleeve of adjustable diameter and means for effecting such a radial compression of the stator sleeve.

2. Description of the Prior Art

Prior art teachings suggest a variety of adjustable diameter pump stators of the type described above. The radial compressibility of the stator is necessary, in order to compensate for the unavoidable wear and abrasion taking place in the helical cavity of the screw pump, since this type of pump is particularly suitable for the conveyance of highly abrasive substances. Diameter adjustability in the various prior art devices is obtained by means of pipe clamps, clamping sleeves, half-shells, or similar devices serving to apply radially inwardly directed pressure to the circumference of the stator sleeve. Some of these prior art suggestions contain on or just under the outer surface of the stator sleeve several rigid segmental slats extending over at least a major portion of the length of the stator sleeve so as to obtain a more uniform distribution of its radial compression.

It is known that the diameter adjustment can be obtained by means of adjustment screws which advance radially against the half-shells, or segmental slats, respectively. Another prior art device suggests compression adjustment by means of two axially opposing tapered sleeves which engage a plurality of radially movable pressure pins, which in turn bear against the segmental slats on the stator sleeve. Only two or four segmental slats are normally employed in this type of device. Another prior art device has a one-piece jacket surrounding its stator sleeve, the jacket being rendered radially yielding through the arrangement of eight slits in the midportion of its length. While the concentric adjustment is made fairly uniform through the numerous slits in its midportion, this diameter adjustment is obviously not uniform over the entire length of the stator sleeve, being limited to its midportion. Consequently, the profile of the molded twin helix in these prior art stator sleeves becomes distorted in many places under diameter reduction, so that losses due to pump slippage tend to increase relatively rapidly, accomanied by a corresponding loss of suction power. The effective operational life of the stator sleeve is thus shortened to such an extent that the total investment costs of the pump are determined to a large extent by the longevity of the pump stator.

Although it is possible to design systems for direct adjustment by means of radially oriented screws bearing upon segmental slats, in practice this can only be accomplished with a very small number of segmental slats on the circumference of the stator sleeve. Adjustable diameter stators using mechanical adjusting means involving a larger number of slats would not only be subject to considerable compression forces generated at the periphery of the stator jacket, but uniform radial adjustment would be practically impossible. Such lack of uniformity again lowers the performance of the pump.

These difficulties could be avoided, in principle, by employing a hydraulic adjusting system, whereby the stator sleeve is surrounded by one or more annular compression chambers containing a pressurized fluid. In one such prior art device the effective pressure is created or controlled by the working pressure of the pump. However, the use of such a hydraulic compressing means introduces new problems, especially in regard to leak tightness, since helical screw pumps are regularly employed in a muddy or dusty environment. Therefore, it is normally not sufficient to provide a fixed volume of pressure fluid, and it becomes necessary to add a continuously operating or automatically controlled fluid leak pump which, obviously, further increases the equipment costs and may lead to additional operational complications. Also, in most cases it is not possible to obtain a direct compression effect of the fluid on the highly elastic stator sleeve, and, if an intermediary clamping sleeve is provided, this will again lead to distortions in the desired uniformity of radial compression.

SUMMARY OF THE INVENTION

The present invention is aimed at improvements in the construction of adjustable diameter stators for helical screw pumps in which the diameter adjustment is obtained by means of simple mechanical adjusting means, the stator sleeve being adjusted through the application of a very uniform radial compression over the entire circumference and length of the stator sleeve, thereby providing improved longevity of the latter, as well as an improvement in operational efficiency and reliability.

It is an object of the present invention to suggest an adjustable diameter stator for eccentric helical screw pumps, the stator assembly comprising a stator sleeve defining a twin helix cavity which cooperates with the pump screw, the stator sleeve being molded of rubber or a similar material. The stator sleeve is surrounded by a jacket which consists of a comparatively large number of segmental slats of hard, highly resistant material. These slats are arranged in parallel and extend longitudinally over at least a major portion of the stator sleeve. The assembly further includes means for adjusting and for transmitting radial compression forces to the segmental slats, in order to reduce the diameter of the stator sleeve, said means including a plurality of roll bodies of hard, non-compressible material which are arranged in at least two spaced radial planes, the compression transmitting means supporting these roll bodies against the outside. An increase in compression causes the roll bodies to be forced radially inwardly against the segmental slats so that the diameter of the stator sleeve is reduced accordingly in a very uniform manner. No leak problems have been encountered with this kind of solution.

An essential element in this assembly are the roll bodies which may be of various shapes and sizes. In each case, the relative motion between the outer support member, which transmits the compression forces, and the slat jacket is distributed over the circumference of the latter as a result of the rolling engagement between the parts. The diameter of the roll bodies is not of critical importance and is therefore not subject to narrow manufcturing tolerances. In fact, some of the embodiments permit the use of roll bodies of widely differing diameters. The roll bodies make it possible to

apply a uniform radial compression load to the stator sleeve at numerous places on the sleeve circumference and over the entire length of the latter. Of course, a prerequisite for such a uniform pressure distribution is the necessity of the segmental slats to have hard and smooth contact surfaces for the roll bodies over which the compression forces are transmitted radially inwardly. The slats must therefore be of hard, highly resistant material and they should have as small a circumference pitch as possible, i.e., they should be numerous.

On the other hand, however, the invention permits an adjustment of the radial compression by means of only a single mechanical adjusting element, similar to the case of a hydraulic pressure transmission. The material of the stator sleeve can now be worn much further, as the diameter of the stator sleeve is progressively reduced, thereby extending the operational life of the pump. The uniformity of concentric adjustment provides a true-to-shape reduction in all cross sections of the twin helix. As a result, the wear and abrasion is similarly uniform along the entire length so that the suction power and pumping capacity are not markedly reduced after a certain amount of wear. Furthermore, when the stator sleeve is finally worn out, it is not necessary to replace the entire stator assembly, the stator sleeve alone being interchangeable, as suggested by the present invention. In some cases, however, some of the segmental slats are permanently attached to the stator sleeve and they, too, will have to be replaced. The roll body system and the remaining parts of the stator assembly, with few exceptions, can normally be reused.

In a preferred embodiment of the invention the segmental slats of the jacket define an overlap in the circumferential direction, forming a jacket which completely envelops the surface of the stator sleeve along its entire length. The roll bodies bear against these overlapping segmental slats in grooves defined by successive overlaps.

By virtue of the overlap arrangement each slat is supported on an adjacent slat so that the compression forces are transmitted more evenly between slats. Of particular importance is the fact that the stator sleeve is radially completely confined. Small differential stresses may be created within the circumferential area of each slat, but, as in the case of a closed sleeve, they are almost completely balanced and can therefore be neglected. In summary, the stator assembly having a stator sleeve which is completely enclosed by slats, exhibits similar characteristics as if surrounded by a closed sleeve, except for the fact that it is now adjustable in diameter and that the cost of the slat envelope is considerably less than that of a closed cylinder sleeve. It is not necessary, furthermore, that the outer surface or the inner surface of these slats be truly cylindrical. It is thus possible to use segmental slats of identical profile, but in various numbers, in order to obtain stator assemblies of different diameters. It is now also possible to design stator assemblies according to the invention which have the same overall dimensions as are found in previously used largely standardized versions, where adjustment was not possible. The adjustable diameter stator assembly can thus be simply substituted for a non-adjustable one.

In the embodiment with overlapping segmental slats, each slat consists of three profile portions, an arcuate inner slat portion, an arcuate outer slat portion, and an offset portion joining the inner and outer slat portions. The outer surface of the inner slat portion and the inner surface of the outer slat portion are preferably so arranged that they are part of a common hypothetical cylinder surfae. Assembled, the inner and outer surfaces of these slat portions thus coincide at least approximately with three concentric, equidistance cylinder surfaces. The offset portion of the slat profile has the additional advantage of reinforcing the slat, thereby improving the longitudinal transmission of compression forces which are applied to the slat at several spaced points only. It is thus possible to obtain a jacket of segmental slats which has a substantially cylindrical outer contour and where the approach motion between the slats during diameter adjustment takes place along concentric contact faces which lie on a common cylinder. However, such an exact geometry is not necessary in all cases. Small deviations from the intended cylinder surfaces may be permissible, and it is therefore possible to assemble stators of varying diameters by using segmental slats of the same cross-sectional profile, but in different numbers.

It is a further suggestion of the present invention to provide the stator assembly with two end rings which are firmly and tightly attached at the two ends of the stator sleeve, the segmental slats being shortened accordingly so as to be longitudinally confined between the end rings. The latter may further include an axially extending centering collar. This arrangement eliminates any sealing problems, and the segmental slats are conveniently retained on the stator sleeve periphery without the need for additional retaining means.

BRIEF DESCRIPTION OF THE DRAWINGS

Additional features and advantages of the invention will become apparent from the description following below, when taken together with the accompanying drawings which illustrate, by way of example, several embodiments of the invention, represented in the various figures as follows:

FIG. **1** is a longitudinal cross section, partially cut away, of a stator assembly for an eccentric helical screw pump embodying the invention;

FIG. **2** is a transverse cross section through the stator assembly of FIG. **1**, taken along line II—II thereof;

FIG. **3** is a longitudinal cross section through a part of a stator assembly representing a second embodiment of the invention;

FIG. **4** is a transverse cross section through the stator assembly of FIG. **3**, taken along line IV—IV thereof;

FIG. **5** shows another embodiment using a roller chain;

FIG. **6** shows an enlarged plan view detail of the chain of FIG. **5**;

FIG. **7** shows in a partial longitudinal cross section still another embodiment of the invention;

FIG. **8** is a partial transverse cross section of still another embodiment of the invention;

FIG. **9** is a longitudinal cross section through the assembly of FIG. **8**, taken along line IX—IX thereof;

FIG. **10** is a longitudinal cross section through a further embodiment of the invention;

FIG. **11** is a transverse cross section through a further embodiment of the invention;

FIG. **12** shows an enlarged cross sectional detail of FIG. **11** in the area XII.

DESCRIPTION OF THE PREFERRED EMBODIMENTS

In FIGS. 1 and 2 is shown a stator sleeve 1, the central cavity of which defines the twin helix 2 of an eccentric helical screw pump. At 3 is indicated a sleeve jacket which is composed of alternating segmental slats 4 and 5. The dove-tailing edges of these segmental slats are inclined in relation to the radial direction by approximately 30° to 50° of angle. The segmental slats are directly adjoining one another at their longitudinal edges 6 along which they execute relative radial motions during diameter adjustment. The stator sleeve 1 itself is molded of abrasion resistant rubber or of a similar, highly resilient synthetic material. The segmental slats, in contrast, are of a very hard, highly resistant material, preferably hardened steel, and have ground longitudinal edge surfaces 6.

Preferably every second slat, e.g., every slat 5, is permanently attached to the stator sleeve by a vulcanized bond between the slat base 7 and the outer surface of the stator sleeve 1. The slats 4 are then loosely positioned between the attached slats 5. However, it is neither necessary nor desirable to provide a vulcanized bond on the entire base surface 7. Such a bond is preferably restricted to the central portion of the surface 7, the strength of the bond being just high enough to prevent detachment of the slats 5 from the stator sleeve circumference. Alternatively, it may be desirable to permanently attach to the stator sleeve the slats 4, rather than the slats 5. The former then define dovetail-shaped grooves into which the loose slats 5 can be inserted longitudinally, the resulting assembly forming a coherent unit between the stator sleeve 1 and the jacket 3. In order to facilitate this insertion assembly, it may be necessary to provide a certain lateral clearance between the attached slats 4.

Since radial adjustment motions of the segmental slats are necessary during a diameter reduction of the stator sleeve, whereby the segmental slats 4 move radially outwardly, while the segmental slats 5 move radially inwardly, it is advantageous not to provide an exact common cylinder surface for the segmental slats 4 and 5, but to reduce the outer marginal surface portions adjacent the slat edges 6 slightly inwardly, in order to obtain a better surface transition when adjacent slats are radially shifted out of alignment.

The stator assembly further includes a casing 8 which is arranged concentrically with the jacket 3, the casing carrying at each longitudinal end a flange 10, centered by a centering shoulder 9. The flanges 10 also serve to axially position the stator sleeve 1. Clamping rods extending between the two axial end flanges 10 provide a clamping action on the assembly in the conventional manner.

Between the casing 8 and the jacket 3 is thus formed an annular space 11 which space is completely filled with balls 12. In at least one of the two end flanges 10 is provided a set screw 13, including screw retaining means, if desired, the penetration depth of screw 13 determining the degree of compression exerted on the balls within the annular space 11. Since the total volume occupied by these balls is essentially fixed and cannot therefore be reduced by the penetration of screw 13 into space 11, the balls react in a manner comparable to that of a non-compressible liquid. The balls, however, being of hardened ground steel, are much easier to handle and are much less prone to operational breakdown.

The set screw 13 illustrated in FIG. 1 may be replaced by a piston, and the latter may be spring biased to provide the compression force. In this case the spring preload is made adjustable by means of a set screw. However, such a spring element is not really necessary, since the stator sleeve 1 itself is a resilient element producing a deformation bias against the compression forces. The set screw 13 may have any desired length. It is also possible to provide a number of such screws, the adjustment effect of each screw being distributed largely over the entire annular space 11. The maximum penetration volume of all set screws 13 should correspond to the maximum abrasion volume permitted on the pump helix 2.

An inward adjustment of a set screw 13 creates a practically uniform radial compression on the segmental slats 4 and 5. The wedge effect on the edges 6 of the segmental slats under this radial compression load causes an increase in the radially inwardly directed forces on the slats 5 and a corresponding decrease of the radially inwardly directed forces on the slats 4. The result is that the slats 5 penetrate deeper into the outer surface of the stator sleeve 1 than the adjacent slats 5, a relative motion taking place along the edge surfaces 6. The stator sleeve 1 is thus radially compressed in the areas of the bases 7 of slats 5. However, these fields of compression overlap sufficiently with increasing radial depth so that these differences in compression are practically eliminated in the area of the pump helix 2 itself, particularly when the number of segmental slats used is between 20 and 26. The abrasion which takes place at the helix 2 is therefore uniform enough to allow for readjustment of the diameter until the practical limit of stator sleeve abrasion is reached.

FIGS. 3 and 4, illustrating a different embodiment of the invention, feature a groove profile 14 of which at least two are arranged at an axial spacing on the jacket 3. In the embodiment shown the groove profile is composed of an annular angle profile 15 and a planar cover profile 16 attached thereto by means of screws. Inside the annular space 11' of each groove profile is provided an even number of alternating rollers 17 and 18, the rollers 17 being biased radially inwardly, while the rollers 18 are biased radially outwardly. The rollers are positioned by means of a cage 19 which allows for sufficient displacement of the rollers during adjustment motion. Adjustment is provided by means of a radially oriented set screw 13' which engages a threaded bushing 21 in the axial leg 20 of thegroove profile 14. This set screw bears against one of the outwardly biased rollers 18. The screw can be advanced radially inwardly until this roller 18 is lowered to the circle occupied by the roller 17. The other rollers are thereby forced to execute a circumferential motion away from the advancing roller 18. But, since the rollers 18 are radially confined against the inside of the axial leg 20 of the groove profile, the annular distance between contacting rollers 17 and 18 can only be reduced by a radially inwardly directed adjustment motion of the inner rollers 17, thereby reducing the diameter of the jacket 3 accordingly. It may be desirable to provide several set screws 13' around the circumference of the profile 14, each set screw being adjustable separately to increase the radial compression on all the rollers. Under certain circumstances, it may be necessary to provide retaining

means between the set screw **13** and the roller **18** contacted by it, in order to prevent an escape motion of the roller. This can be achieved in a very simple manner in the case where balls are used instead of rollers, but balls are suitable only for lesser compression loads.

Several grooved rings of the kind illustrated in FIGS. **3** and **4** may be arranged at regular axial intervals on the jacket of the stator sleeve. These rings need not define a closed groove like the one obtained by using the angle profile **15** and the cover profile **16.** The essential element is a rigid ring as defined by the axial leg **20** of the angle profile, combined with a means to prevent the axial escapement of the roll bodies. The proposed cage **19** may be of sheet metal, or it may be molded of hard plastic. Alternatively, the cage may be provided with a limited degree of flexibility so as to serve as a cage band.

A further embodiment of the invention is shown in FIGS. **5** and **6.** They illustrate a roller chain **22** consisting of chain links **23,** pins **24,** rollers **25,** and a chain lock **26.** The chain lock **26** draws the two chain ends toward one another and thereby closes the chain around the circumference of the jacket **3,** producing the desired radial compression. Instead of the pins **24** extending through the rollers **25,** the latter may be provided with axial trunnions engaging the chain links. No supporting envelope or sleeve is required in this embodiment, since the compression forces are transmitted through the links **23** of the roller chain. Instead of the chain lock **26,** as illustrated, may also be used any other known chain tensioning device.

The embodiment of FIG. **7** illustrates the use of several spaced annular rows of balls **27** arranged at an axial distance from one another on the circumference of jacket **3.** These rows of balls may be provided with or without a ball cage, the balls being axially positioned by ring members **28** and **29** and radially retained by inwardly tapered end faces **29***a* provided on the larger ring members **29.** These ring members are arranged to be forcibly clamped together in the axial direction, using known devices such as end flanges and threaded rods extending therebetween, for example. This clamping action causes the balls **27** to be pushed radially inwardly under the action of the tapered end faces **29***a*, thereby creating a radial compression on the jacket **3.** This arrangement makes it possible to provide any desired number of radial clamping positions in a simple, inexpensive configuration.

A still further embodiment using roll bodies for the distribution of compression forces is illustrated in FIGS. **8** and **9.** This embodiment features roll bodies in the form of longitudinally extending rods or steel tubes **30** surrounding the jacket **3** of the stator sleeve. These roll tubes are surrounded by one or several pipe clamps **31** or by an elongated clamping sleeve. At **32** is indicated an adjusting means such as a bolt and nut. The tubes or rods **30** do not contact one another in the circumferential direction, a small clearance being required to allow for radial reduction of the stator sleeve diameter, as previously described. It is also possible to arrange a series of rods or tubes in the staggered manner shown in FIG. **4.** The axial length of the rods **30** need not be identical to the length of the stator sleeve, but it should preferably be more than one-half of the sleeve length.

In general, the jacket **3** should be composed of at least **10,** preferably however more than **15** segmental slats, in order to assure a uniform adjustment of the sleeve diameter. It should be understood, that the slats may be attached to the stator sleeve by other means than a vulcanized bond. Under certain circumstances, one may desire to provide a circumferential clearance between adjacent slats, rather than having the slats directly adjoin one another. However, these clearances should be kept very small so as not to impede the rolling displacement of the roll bodies on the outer face of the slats.

In FIGS. **10, 11,** and **12** is ilustrated a still further embodiment of the invention. As can be seen in FIG. **10,** the stator assembly includes at each end of the stator sleeve **1** an end ring **33** which may be permanently attached to the cylindrical outer surface **34** of the stator sleeve by a vulcanized bond, for example. Between the end rings **33** extend the segmental slats **35.** Centering collars **36** on these end rings retain the slats against the stator sleeve **1.**

As can be seen in FIGS. **11,** and **12,** each segmental slat **35** has a cross-sectional profile which is composed of an inner arcuate slat portion **37,** an outer arcuate slat portion **38,** and an offset profile portion **39** between the two arcuate slat portions. The slat portions **37** and **38** thereby represent each a segment of a cylinder, the difference between the inner radii of curvature *r*2 and *r*1 being equal to the wall thickness *s* of the stock from which the segmental slat is formed. Thus, the inner radius *r*2 of the outer slat portion is equal to and coinciding with the outer radius of the inner slat portion. These slats are therefore arranged to overlap each other in the region of the angle *a*. This overlap may be increased or decreased by a sliding motion between the contacting arcuate surfaces of the slat portions without affecting the radial position of the slat **35.** The offset portion **39** of the slat profile may include a straight inclined portion, the angle of inclination *b* being comprised between 20° and 45°, preferably 30°.

The outer surface of the stator sleeve has in this case a profile which corresponds exactly to the overlapped inner profile of the segmental slats. No connection is therefore necessary between the individual slats which can be mounted by merely inserting them under the centering collars **36** of the end ring **33,** whereby a slight elastic deformation of the stator sleeve may take place. Alternatively, the stator sleeve may be molded into the assembled end rings and segmental slats. In this case the inner sides of the slats may be entirely or partially bonded to the stator sleeve by vulcanization, the latter being controlled or prevented, where desired, by the application of intermediate coatings. In a preferred embodiment the inner side **40** and the end face **41** of the inner slat portion **35** is bonded to the stator sleeve by vulcanization, while the inner side **42** of the offset portion and the inner side **43** of the outer slat portion are not attached to the stator sleeve. Thus, an adjustment motion is possible on these surfaces **42** and **43.** It is also possible to restrict the vulcanized bond to the end face **41,** in which case the entire inner surface of the segmental slats is allowed to shift relative to the outer surface of the stator sleeve **1.** This adjustment motion is facilitated by a small angle of inclination *b* at the offset profile portion **39** of the slats. The overall adjustability of a stator sleeve having an outer diameter of approximately 160 mm, for example, is within the range of 3 to 6 mm of diameter reduction. Hence, with 12 segmental slats around the stator sleeve, the adjustment

displacement at the overlap would be between 0.8 and 1.6 mm. Such a displacement is therefore easily accommodated, even where all segmental slats are bonded to the stator sleeve by vulcanization.

The embodiment as illustrated in FIGS. **10** to **12** shows the segmental slats arranged so that their adjustment surface of radius *r2* is concentric with the stator axis **44.** For practical purposes, however, such precision is not required so that, instead of the 13 slats illustrated in FIG. **11,** 12, or 14, 15, or even as few as 10 of these slats may be assembled on a different stator sleeve diameter, using aproximately the same overlap distance *a*.

The assembled stator sleeve **1** and segmental slats **35** thus present an overall cylindrical outer surface **45,** with longitudinal grooves **46** arranged therein, the grooves being defined by a bottom represented by the outer surface **46** of the inner slat portion **35,** by one lateral face represented by the end face **48** of the outer slat portion **38,** and by another lateral face represented by the outside of the offset slat portion **39.** Within these grooves are arranged, in axial spacing, several circumferential rows of steel balls **49** (see FIG. **10**) which are axially positioned and radially retained by closed ring members **52, 54** and **55,** arranged concentrically around the stator sleeve. Within the thirteen longitudinal grooves **46** are thus arranged in three circumferential rows **39** such balls. The groove profile on the one hand, and the inwardly tapered end faces **50** of the ring members on the other hand, thereby position and retain each ball individually as if by a ball cage. The circumferential displacement clearance of each ball is thereby approximately equal to its diameter; it should be no less than 0.5 times, but preferably between 0.8 and 1.5 times its diameter. Radial compression on the balls **49** is obtained by axially clamping the ring members **52, 54** and **55** against one another, whereby opposing tapered end faces **50** transform the axial compression forces into uniform radial compression forces between the balls **49** and the segmental slats **35.** These forces are further distributed within the length of each slat by the longitudinal rigidity of the segmental slats **35** having a stock thickness of approximately 5 mm, with their rigidity being considerably enhanced by the special slat profile with its offset profile portion **39.**

As can be seen in FIG. **10,** the succession of ring members **51, 52, 54** and **55** is axially compressed by abutting the first ring member **51** against the adjacent end ring **33** and by providing an axially displaceable thrust ring **56** behind the last ring member **55.** FIG. **10** of the drawing shows a clamping mechanism which takes advantage of the normally required housing end flanges **57** and of the clamping rods **58** by means of which the pump housing and stator assembly are clamped together. The end flanges **57** in this case abut axially against the end faces **60** of the stator sleeve, the otherwise flat clamping face of the flange **57** including an annular groove **61** with an O-ring **62** received therein, the latter sealing the interface between the outer surface **34** of the stator sleeve and the segmental slats. This arrangement provides a direct seal between the end flanges **57** and the stator sleeve **1.**

Several clamping rods **58** extend between the two opposing end flanges **57,** the threaded portion **63** of the rods being conveniently extended to also serve for the adjustment of the aforementioned sleeve clamping mechanism. For this purpose, each clamping rod **57** either carries a separate clamping bracket engaging the thrust ring **56,** or a closed clamping ring **64** with a bore for each clamping rod is arranged to engage the thrust ring **56** so that the axial clamping adjustment can be set conveniently by means of clamping nuts **65** and counter nuts **66.**

A major advantage of this embodiment resides in the fact that the overall assembly dimensions of the novel adjustable diameter stator sleeve are such that it can be substituted for previously used non-adjustable stator sleeves. This compactness is primarily due to the use of comparatively small steel balls in conjunction with the clamping mechanism featuring closed ring members **51, 52,** etc. It should be understood, of course, that other clamping mechanisms than those illustrated in the drawings may be used together with intermediate roll bodies for the purpose of obtaining a most uniform distribution of the compression forces on the stator sleeve.

What I claim is:

1. An adjustable stator assembly for a helical screw pump comprising in combination:

a stator sleeve of a resiliently yielding material such as rubber and the like having a longitudinal cavity defined by a twin helix inside which may be received, in a known manner, an eccentrically rotating helical screw;

a plurality of parallel segmental slats of a hard, highly pressure resistant material arranged on the circumference of the stator sleeve, the slats extending longitudinally over at least a major portion of the sleeve length; and

means for radially compressing the stator sleeve through the application of radial pressure to said slats, the compressing means including:

a plurality of roll bodies bearing against the slats from the outside while being rollable thereon in at least one direction, each slat being thereby biased radially inwardly on at least two longitudinally spaced points;

means for transmitting compression forces between the roll bodies contained in any given radial plane through the stator assembly; and

means for adjusting the radial compression on said slats.

2. A stator assembly as defined in claim **1,** wherein:

the roll bodies are balls arranged in several single annular rows around the segmental slats with small clearances between circumferentially adjacent balls;

the compression transmitting means is in the form of several axially spaced closed ring members surrounding the stator sleeve, each row of balls being axially abutted and radially restrained by the opposing ends of two such ring members of which at least one has an inwardly tapered end face with which it engages the balls; and

the compression adjusting means is a means for forcibly approaching said ring members axially against each other, thereby creating an adjustable radially inwardly directed compression against said balls and said slats.

3. A stator assembly as defined in claim **1,** wherein:

the stator sleeve is of vulcanizable rubber; and

at least every other segmental slat is attached to the stator sleeve by means of a vulcanized bond.

4. A stator assembly as defined in claim **1,** wherein:

at least 10, but preferably more than fifteen segmental slats are arranged adjacent to one another on the circumference of the stator sleeve, the slats being dispaceable relative to each other at least in the circumferential direction.

5. A stator assembly as defined in claim **4**, wherein:
the segmental slats are arranged so that they circumferentially adjoin each other; and
the surfaces of contact between adjoining slats are inclined in relation to the radial direction so that a reduction in the sleeve diameter under radial compression and a corresponding circumferential approach movement of the slats is made possible through a radial escape movement of adjoining slats along said contact surfaces.

6. A stator assembly as defined in claim **5**, wherein:
the nummber of slats is an even one;
said contact surfaces between adjoining slats are inclined alternatingly in opposite direction in relation to the radial direction; and
the slats have a generally trapezoidal cross-sectional outline with alternatingly inwardly and outwardly facing bases.

7. A stator assembly as defined in claim **6**, wherein:
the slats which have their trapezoidal base facing radially inwardly are attached to the stator sleeve by means of a vulcanized bond.

8. A stator assembly as defined in claim **1**, wherein:
the compression transmitting means includes a rigid outer casing surrounding the stator sleeve at a radial distance from said slats so as to form a substantially closed annular space around the stator sleeve within which are received the roll bodies;
the roll bodies are balls of such size and number that they occupy said annular space in its entirety; and
the adjusting means includes a member capable of being forcibly advanced into said annular space so as to reduce its volume, the member thereby creating an increasing compression between the balls, which compression is transmitted by said rigid casing to all parts of said stator sleeve.

9. A stator assembly as defined in claim **8**, wherein:
said member of the adjusting means is a set screw extending through a threaded bore in the wall of said casing.

10. A stator assembly as defined in claim **1**, wherein:
the compression transmitting means includes at least two longitudinally spaced rigid profiles, each surrounding the stator sleeve at a radial distance from said slats so as to form an annular space around the stator sleeve within which are received the roll bodies, said means further including means for axially retaining the roll bodies so that they remain within said space; and
the adjusting means includes a member associated with each rigid profile which can be radially advanced through the profile against the roll bodies to set the compression between the roll bodies.

11. A stator assembly as defined in claim **10**, wherein:
said rigid profile is an angle profile having an axial profile leg extending parallel and at a distance from the slats and a radial profile leg pointing inwardly, thereby restraining the roll bodies in one axial direction; the axial retaining means further including a radially extending cover profile opposite said radial profile leg; and
the roll bodies have a diameter greater than one-half the radial width of said annular space, but smaller than said width, the roll bodies being arranged to alternately bear against either the axial profile leg or a segmental slat.

12. A stator assembly as defined in claim **10**, wherein:
the roll bodies have a diameter greater than one-half the radial width of said annular space, but smaller than said width, the roll bodies being arranged to alternately bear against either said rigid profile or a segmental slat; and
said axial restraining means includes a cage of the kind used in anti-friction bearings.

13. A stator assembly as defined in claim **10**, wherein:
said roll bodies are cylindrical rollers and said adjusting means is a radial set screw engaging one of the rollers which does not bear against a slat.

14. A stator assembly as defined in claim **1**, wherein:
the roll bodies are a series of elongated rollers extending in parallel alignment with the segmental slats over at least one-half of the length of the stator sleeve, the rollers being arranged proximate to each other in a circumferential row, with a small clearance allowing for their being drawn together when the intended diameter reduction of the stator sleeve is effected; and
the compression transmitting means is in the form of at least two axially spaced non-stretchable annular members surrounding said rollers.

15. A stator assembly as defined in claim **14**, wherein:
said elongated rollers are tubular in cross section.

16. A stator assembly as defined in claim **14**, wherein:
the compression adjusting means is combined with the compression transmitting means in the form of at least two substantially closed adjustable pipe clamps surrounding said rollers.

17. A stator assembly as defined in claim **1**, wherein:
the roll bodies are a series of rollers whose axes extend in parallel alignment with the segmental slats, the rollers being arranged proximate to each other in a circumferential row;
the compression transmitting means is in the form of a chain-link-type connection between each adjacent roller pair, except one, thus forming a chain with two ends, said one roller pair being spaced apart to allow for the chain ends to be drawn together when the intended diameter reduction of the stator sleeve is effected; and
the compression adjusting means is a means for forcibly drawing said chain ends together.

18. A stator assembly as defined in claim **17**, wherein:
said compression adjusting means is an adjustable chain lock.

19. An adjustable stator assembly for a helical screw pump comprising:
a stator sleeve of a resiliently yielding material such as rubber and the like having a longitudinal cavity defined by a twin helix inside which may be received, in a known manner, an eccentrically rotating helical screw;
a plurality of parallel segmental slats of flat stock of a hard, highly pressure resistant material arranged

on the circumference of the stator sleeve, the slats extending longitudinally over at least a major portion of the sleeve length; each slat being defined cross-sectionally by an arcuate inner slat portion and by an arcuate outer slat portion which are joined by an offset portion, the curvatures of these slat portions and the radial height of offset being such that, when an outer slat portion overlaps the inner slat portion of the next slat, said curvatures coincide approximately with three concentric, equidistant circles; and

means for radially compressing the stator sleeve through the application of radial pressure to said slats.

20. A stator assembly as defined in claim **19,** wherein:

the offset portion of the segmental slat includes an inclined profile portion, the angle of incline in relation to the adjacent arcuate slat portions being comprised between 20° and 45°, preferably 30°.

21. A stator assembly as defined in claim **19,** wherein:

the segmental slats are permanently attached to the outside of the stator sleeve by a bond, preferably of the vulcanized type, between their inner slat portions and the surface of the stator sleeve.

22. A stator assembly as defined in claim **19,** further comprising:

a rigid end ring at each axial end of the stator sleeve surrounding the latter; the segmental slats have an overall length to axially fit between the aforementioned end rings.

23. A stator assembly as defined in claim **22,** wherein:

at least one of the end rings includes an axially inwardly facing centering collar whose inner diameter cooperates with the assembled outer diameter of the segmental slats so as to radially retain the latter.

24. A stator assembly as defined in claim **22,** wherein:

the overlapping segmental slats present an overall outer contour which includes a longitudinal groove between each end face of an outer slat portion and the offset portion of the next slat, the bottom of each groove being defined by the outer surface of an inner slat portion; and

the means for radially compressing the stator sleeve includes:

a plurality of balls arranged in at least two axially spaced radial planes, with each plane containing a series of balls equal in number to that of the segmental slats, each ball being confined in one of said grooves, bearing against its bottom;

several axially spaced closed ring members surrounding the stator sleeve, each series of balls being axially abutted and radially retained by the opposing ends of two such ring members of which at least one has an inwardly tapered end face with which it engages the balls; and

means for forcibly approaching said ring members axially against each other, thereby creating an adjustable radially inwardly directed compression against said balls and said slats.

25. A stator assembly as defined in claim **24,** wherein:

the circumferential width of said longitudinal grooves is such that each ball has a circumferential displacement clearance within its bounds which is at least equal to 0.5 times, and preferably between 0.8 and 1.5 times the ball diameter.

26. A stator assembly as defined in claim **24,** wherein:

the approaching means includes an axially displaceable thrust ring surrounding the stator sleeve between one of said end rings and the nearest of said ring members and means for axially advancing said thrust ring toward the ring members, thereby creating longitudinal compression forces between said ring members and the other of said end rings with a resultant inwardly directed compression created against said balls and said slats.

27. A stator assembly as defined in claim **26,** the assembly further comprising:

an end flange abutting against each axial end of said stator sleeve; and

several angularly spaced threaded clamping rods extending between said end flanges at a radial distance from the ring members;

said thrust ring advancing means including adjustment nuts arranged on the threaded clamping rods, the nuts cooperating with the thrust ring.

28. In a helical screw pump having adjustable stator compressing means encircling the stator, a radially compressible stator comprising in combination:

a stator sleeve of a resiliently yielding material such as rubber and the like having a longitudinal cavity defined by a twin helix inside which may be received an eccentrically rotating helical screw;

a plurality of segmental slats of flat stock of a hard, highly pressure resistant material arranged on the circumference of the stator sleeve, the slats extending longitudinally over at least a major portion of the sleeve length and overlapping each other in the circumferential direction; each slat being defined cross-sectionally by an arcuate inner slat portion and by an arcuate outer slat portion which are joined by an offset portion, the curvatures of these slat portions and the radial height of offset being such that, when an outer slat portion overlaps the inner slat portion of the next slat, said curvatures coincide approximately with three concentric, equidistant circles.

29. A stator as defined in claim **28,** further comprising:

a rigid end ring at each axial end of the stator sleeve, the segmental slats having an overall length to axially fit between the two end rings.

30. A stator as defined in claim **29,** wherein:

at least one of the end rings includes an axially inwardly facing centering collar whose inner diameter cooperates with the assembled outer diameter of the segmental slats so as to radially retain the latter.

31. A stator as defined in claim **28,** wherein:

the offset portion of the segmental slat includes an inclined profile portion, the angle of incline in relation to the adjacent arcuate slat portions being comprised between 20° and 45°, preferably 30°.

32. A stator as defined in claim **31,** wherein:

the segmental slats are permanently attached to the outside of the stator sleeve by a bond, preferably of the vulcanized type, between their inner slat portions and the surface of the stator sleeve.

33. A stator as defined in claim **32,** wherein:

the bond between the inner slat portions and the surface of the stator sleeve is restricted to the longitudinal edges of the inner slat portions.

* * * * *