United States Patent

Evans

[15] **3,651,242**

[45] **Mar. 21, 1972**

[54] OCTAVE JUMPER FOR MUSICAL INSTRUMENTS

[72] Inventor: **Chauncey R. Evans**, Costa Mesa, Calif.

[73] Assignee: **Columbia Broadcasting System, Inc.**, New York, N.Y.

[22] Filed: **June 15, 1970**

[21] Appl. No.: **46,249**

[52] **U.S. Cl.** **84/1.11**, 84/1.19

[51] **Int. Cl.** **G10h 1/06**, G10h 3/00

[58] **Field of Search** ..... 84/1.01, 1.11, 1.12, 1.14, 84/1.16, 1.19, 1.21, 1.22, 1.24, 1.25, DIG. 9, DIG. 11

[56] **References Cited**

UNITED STATES PATENTS

3,429,976	2/1969	Tomcik	84/1.12
Re.26,533	3/1969	Cookerly et al.	84/1.16
2,211,540	8/1940	George	84/1.21
3,006,228	10/1961	White	84/1.01
3,073,202	1/1963	Evans	84/1.14
3,325,579	6/1967	Cookerly et al.	84/1.16
3,443,463	5/1969	Campbell	84/1.01
3,474,182	10/1969	Destelle	84/1.25
3,493,669	2/1970	Elbrecht et al.	84/1.16
3,490,327	1/1970	Volpe	84/1.25

Primary Examiner—Thomas J. Kozma
Assistant Examiner—Stanley J. Witkowski
Attorney—Gausewitz, Carr & Rothenberg

[57] **ABSTRACT**

A bass or other guitar has a transducer for each of its strings, and each transducer is connected to an octave jumping circuit which lowers the musical tone produced by the individual string, all without loss of either harmonics or amplitude variations. The wave form of the fundamental frequency of each musical tone is squared, divided by two and then amplitude modulated to follow the amplitude envelope of the original tone. The modulated square wave contains only odd harmonics of the lowered frequency fundamental. The missing even harmonics are restored by combining with the modulated square wave the original tone containing all of its harmonics.

26 Claims, 7 Drawing Figures

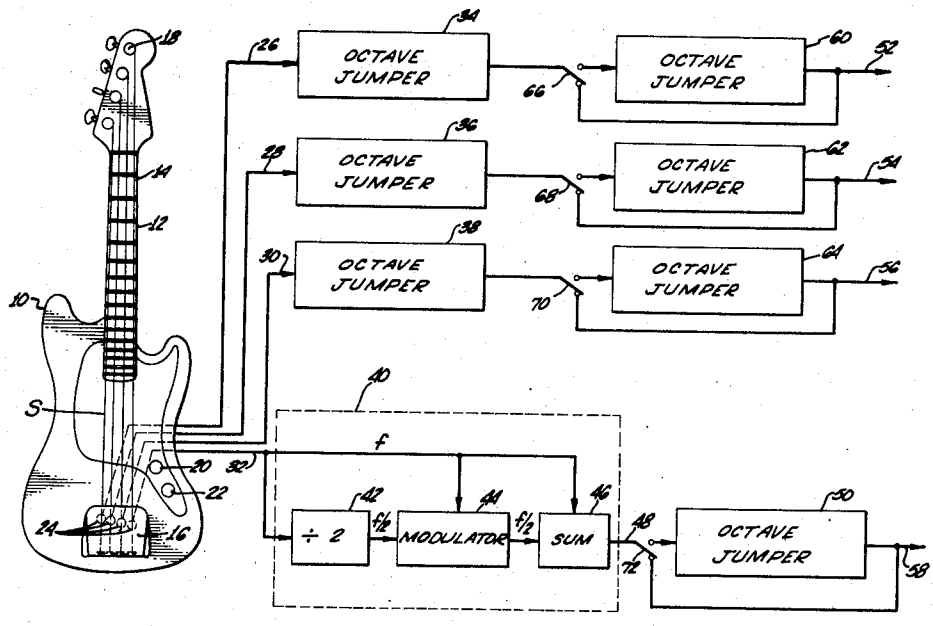

FIG. 1.

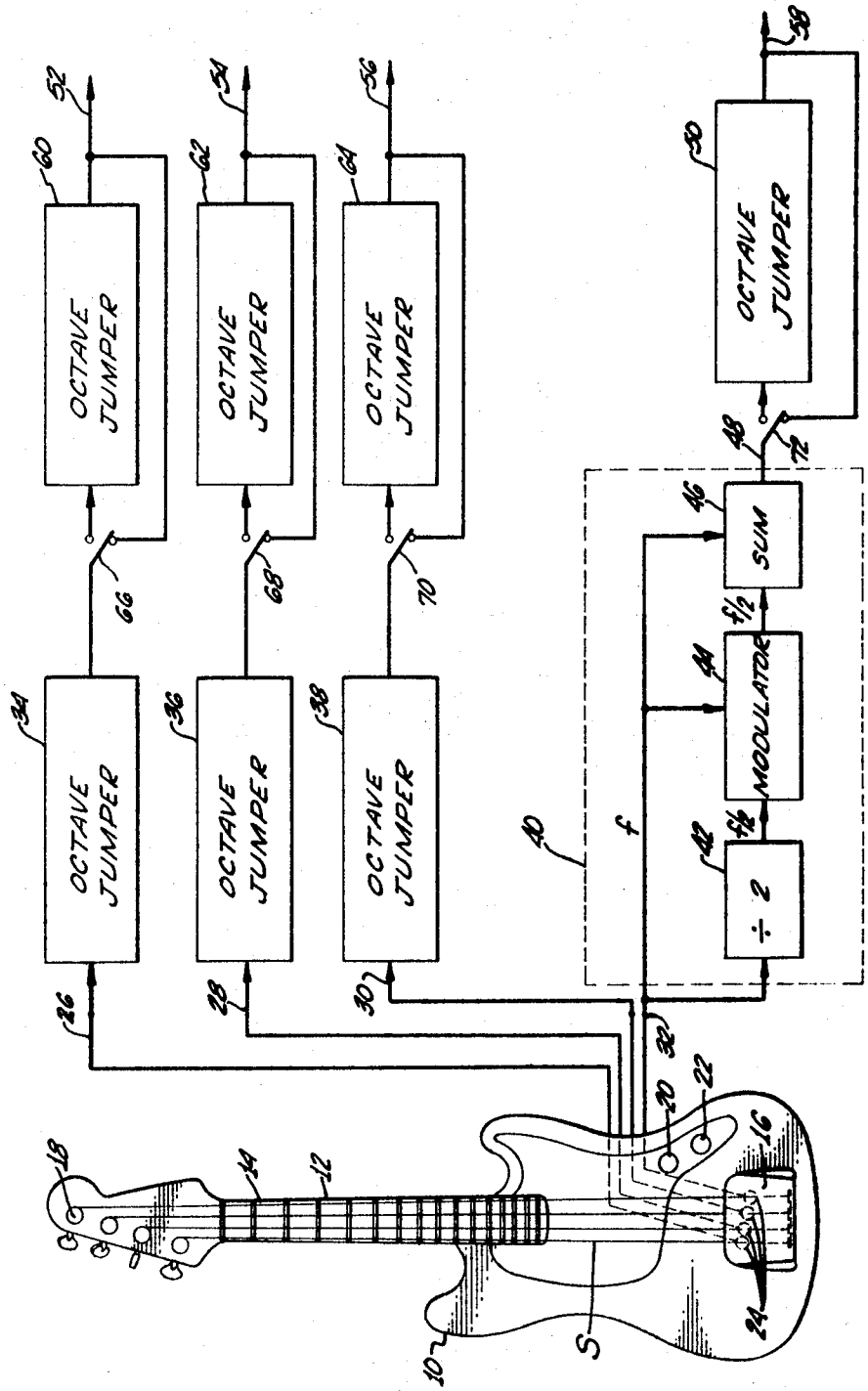

INVENTOR.
CHAUNCEY RICHARD EVANS
BY
Gausewitz & Carr
ATTORNEYS

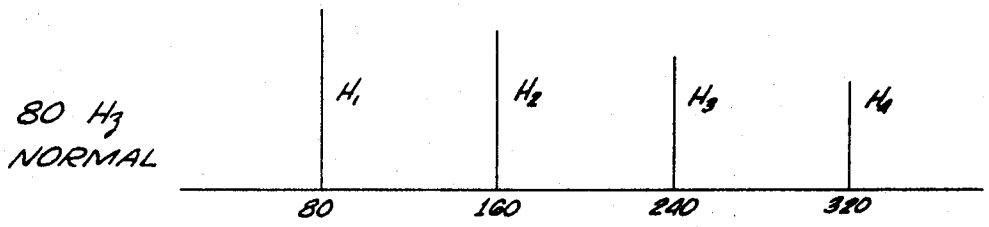

FIG. 2a.

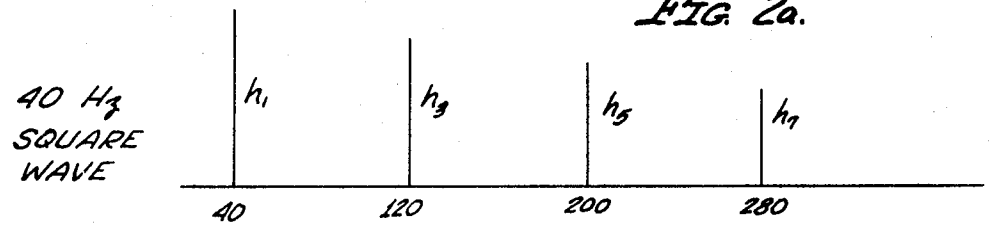

FIG. 2b.

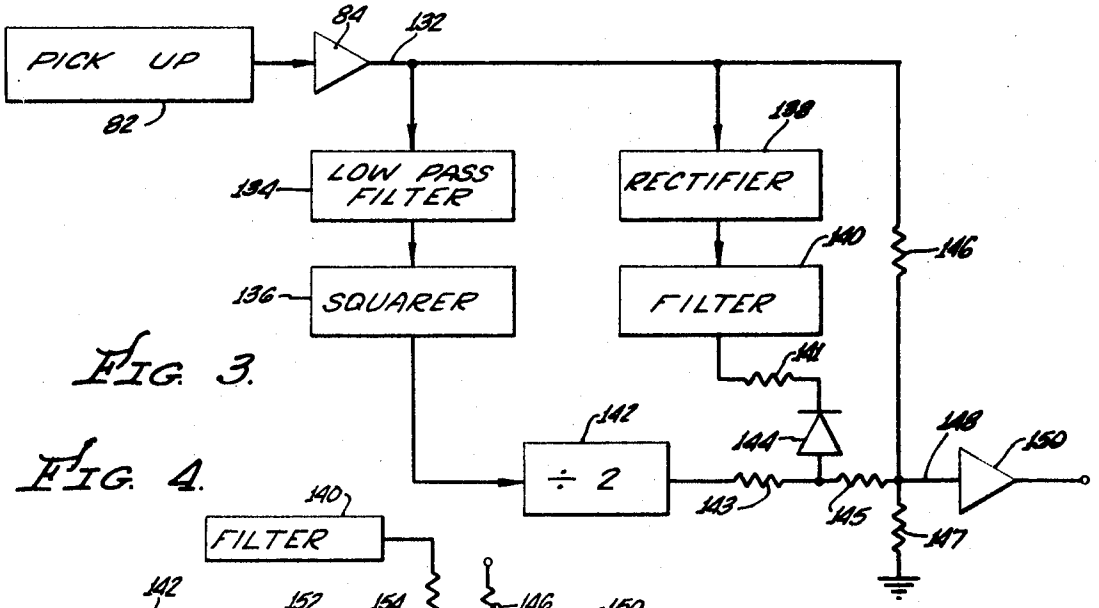

FIG. 3.

FIG. 4.

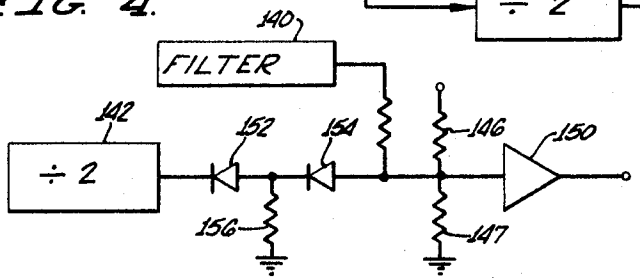

FIG. 5.

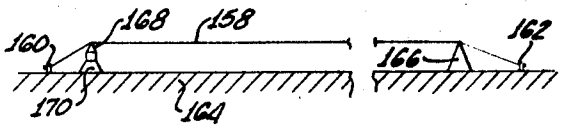

FIG. 6.

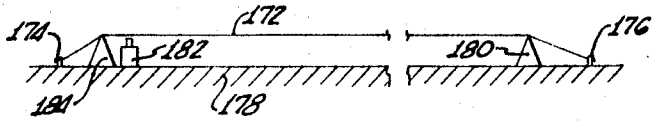

INVENTOR.
CHAUNCEY RICHARD EVANS

BY Dawsewitz & Carr

ATTORNEYS

OCTAVE JUMPER FOR MUSICAL INSTRUMENTS

BACKGROUND OF THE INVENTION

1. Field of the Invention

The present invention relates to electrical tone generation and more particularly concerns selective frequency jumping of musical tones.

2. Description of Prior Art

Electric tone generation for various types of musical instruments has long employed octave jumping to provide broadened frequency range. Thus, an electric organ often employs a group of master oscillators, one for each of the 12 notes of the common scale. These highly stable LC tuned oscillators are precisely tuned to the notes of the highest octave to be available from the instrument. Then a first set of divide by two circuits yields notes of the second lower octave, a second set of divide by two circuits yields the third lower octave and so on for as many octaves as are required for the particular instrument. These tones have no amplitude variation as, for example, the decaying amplitude of a plucked string. Furthermore, such tones are initially lacking in even harmonics. The lack of even harmonics derives from the common use of binary circuits such as the bi-stable multi-vibrator or common flip-flop to provide the divide by two action. A symmetrical rectangular wave, having equal duration positive and negative going portions is commonly termed a square wave. Such a square wave is provided at the flip-flop output and embodies only odd harmonics of the fundamental frequency, as is well known. Commonly for octave jumping, one starts with a sinusoidal output of a stable master oscillator, feeds this sine wave signal into a suitable squaring circuit such as an overdriven amplifier, for example, and then employs the steep leading or trailing edge of the squared signal to trigger the flip-flop divide by two circuit. The latter provides its square wave output at half frequency, but without even harmonics. Even with the use of complex and sophisticated wave shaping circuitry, the various attempts to restore full harmonic content are not satisfactory. Other arrangements employing binary dividers for step by step frequency lowering are shown in the U.S. Pat. No. 3,490,327 to I. D. Volpe.

Application of selective frequency jumping has been suggested for various types of stringed instruments such as, for example, the electric guitar. For this type of instrument, octave jumping will provide a greatly increased range of tone generation. A more specific problem exists in the bass guitar, where because of the low tones required of this instrument, string diameter and length introduce many problems. Instrument size begins to be unwieldy since the neck of the common bass guitar may be on the order of 32 inches, whereas the standard guitar neck need be but 25 to 26 inches. Juxtapositioning of the strings and the relatively large spacing between adjacent frets are other problem areas with the bass guitar. All of these problems can be considerably minimized through the use of electronic circuits for lowering frequency output of such an instrument.

For provision of a broadly varying tone generation system, J. C. Cookerly, et al., in U.S. Pat. No. Re26,533, employs for each string of an electric guitar, an amplifier, a wave shaper, and an amplitude modulator. The wave shaper may be one of several different types, including a frequency doubler and a binary dividing circuit. For each of these wave shapers, the square wave output is fed to a signal reproducing means that includes an amplifier. The output amplitude is varied by controlling the bias of the amplifier in a manner corresponding to the volume variation of the tone of the original instrument.

The system of Cookerly, et al., is complex, expensive, and at best, fails to adequately reproduce the original tone. It fails to produce a signal that includes all harmonics of the tone originally generated. As previously mentioned, a square wave contains only odd harmonics of its fundamental frequency. Cookerly, et al., show or suggest no way to overcome the lack of even harmonics in the output signal. Further, the volume control shown by Cookerly, et al., achieved through variable

bias control of the amplifier, either introduces significant nonlinearity into the output signal or requires a costly amplifier that exhibits high linearity over a wide frequency and amplitude range.

Accordingly, it is an object of the present invention to achieve frequency jumping of a generated tone without loss of either harmonics or amplitude modulation, and in a highly simple, practical, and inexpensive manner.

SUMMARY OF THE INVENTION

In carrying out principles of the present invention in accordance with a preferred embodiment thereof, the frequency of an input signal that has fundamental and harmonic frequencies is lowered by apparatus that comprises means responsive to the input signal for generating a first signal component having a lower fundamental frequency and odd harmonics. Second means responsive to the input signal combines a second signal component with the first signal component. The second signal component has even harmonics of the lower frequency. Stated otherwise, practice of one form of the present invention includes generation of a lower octave signal from an input signal of a higher octave by first dividing by two the frequency of the fundamental of the input signal, then combining the higher frequency input signal with the divided frequency fundamental. A feature of the invention is amplitude modulation of the divided frequency signal prior to its combination with the input signal. This is achieved by means of a simple low cost diode modulator.

BRIEF DESCRIPTION OF THE DRAWINGS

FIG. **1** illustrates a preferred embodiment of the invention as applied for octave jumping of tones generated by a bass guitar,

FIGS. **2***a* and **2***b* illustrate harmonic content of signals of adjacent octaves,

FIG. **3** illustrates in detail a single octave jumper according to principles of this invention,

FIG. **4** shows an alternate modulator, and

FIG. **5** and **6** depict placement of pickups.

DETAILED DESCRIPTION

As illustrated in FIG. **1**, the electrical bass guitar includes a body **10** fixedly carrying a neck or fingerboard **12** with a number of frets such as that indicated at **14** thereon. In the illustrated instrument, four strings generally designated S are each secured at one end thereof to a bridge device **16** carried at one end of the body. The strings extend over the frets of the guitar neck and are secured at the other ends thereof to individual ones of four tuning screws **18** carried at the guitar head. The body **10** also carries a pair of volume and tone control knobs **20, 22.**

A plurality of transducers **24**, of which there is one for each of the four strings of the instrument, is carried by the body **10** in close proximity to the individual strings. Each transducer has an independent electrical lead **26, 28, 30** and **32** which transmits a signal to an individual one of four octave jumpers **34, 36, 38** and **40.**

Each of the octave jumpers **34** through **40**, is identical to each of the others. For simplicity of illustration, basic elements of octave jumper **40** only are shown in this figure, it being understood that each other octave jumper incorporates the same basic elements.

The signal produced by any one of transducers **24**, and provided on lead **32**, for example, is an accurate reproduction of the sound of the plucked string, within the limits of transducer linearity. This includes the fundamental and all harmonics, all subject to the exponentially decaying amplitude that is characteristic of a string. The purpose of the octave jumper **40** is to lower the musical tone, appearing as an electrical signal on lead **32**, by one full octave without any significant loss of its amplitude modulation or of any of its harmonics. The essential components of the octave jumper include a binary divider **42**,

a modulator **44**, and a summing network **46**, each of which will be described in further detail in connection with the description of FIG. **3**.

The transducer output on lead **32** may have a fundamental frequency (*f*) of 80 Hz., for example. This becomes a square wave of 40 Hz. (*f*/2) at the output of the binary divider **42**. The square wave, however, contains only odd harmonics and, in order to obtain a more faithful reproduction at the lower frequency, it is necessary to add the missing even harmonics into this 40 Hz. frequency. This is done by adding to the square wave signal of the lower frequency *f*/2, the original signal with all of its overtones and having the fundamental of the higher octave, namely *f*. Summing network **46** accomplishes the combination of the signals *f* and *f*/2. The combination of *f* with all harmonics and the odd harmonics of *f*/2 provides a signal having all harmonics of *f*/2 as illustrated in FIGS. **2***a* and **2***b*.

FIG. **2***a* illustrates harmonics of a normal 80 Hz. signal provided at the transducer on lead **32**. This signal includes the harmonics H_1, H_2, H_3, H_4, etc., at the indicated frequencies respectively of 80, 160, 240 and 320 Hz.

Illustrated in FIG. **2***b* is harmonic content of the lower octave signal at the *f*/2 fundamental frequency of 40 Hz. Since this signal is a square wave containing only odd harmonics, it contains only harmonics indicated at h_1, h_3, h_5, h_7, namely harmonics at frequencies of 40, 120, 200, 280 Hz., etc.

Comparison of FIGS. **2***a* and **2***b* readily indicates that the harmonics of the higher octave signal at 80 Hz. respectively correspond to the missing even harmonics of the lower octave square wave signal. Thus H_1, the fundamental of the 80 Hz. respectively correspond to the missing even harmonics of the lower octave square wave signal. Thus H_1, the fundamental of the 80 Hz. signal, is the second harmonic of the lower octave. Similarly, H_2, H_3 and H_4 are the fourth, sixth, and eighth harmonics of the lower octave square wave signal. Thus, by combining the signals and the several harmonics thereof, illustrated in FIGS. **2***a* and **2***b*, there is obtained a signal with the lower octave fundamental of 40 Hz. and all of its harmonics, both odd and even.

The relative amplitudes of the several odd harmonics (FIG. **2***b*) are substantially the same as the relative amplitudes of the harmonics of the higher octave signal. Accordingly, the even harmonics of the lower octave signal, obtained from the full harmonic content of the higher octave signal, may be directly added to the lower octave signal having only odd harmonic content, and any resultant distortion will be substantially minimal. Nevertheless, for those situations where even such minimal difference in relative intensities of the several harmonics cannot be tolerated, a simple circuit that is nonlinear with frequency, such as, for example, the combination of a single resistor and capacitor, may be inserted into one of the inputs to the resistive summing network to conform the relative intensities of the two groups of harmonics.

As is well known, the standard flip-flop or binary divider operates to provide at its output a signal of either of two possible levels, whereby the half cycles of the signal *f*/2 are of unvarying amplitude. In order to achieve a decaying amplitude envelope, modulator **44** having a modulation control signal input thereto from the originally generated signal of frequency *f*, is interposed between the summing network **46** and the binary divider **42**. Thus, the lower octave square wave having only odd harmonics is amplitude modulated before even harmonics are restored.

The output of summing network **46** on lead **48** is therefore a substantially accurate replica of the original input on lead **32**, but one octave lower. It contains all of the original harmonics and also has a substantially identical amplitude envelope. If deemed necessary or desirable, the lower octave signal on lead **48** may, itself, be processed in a second octave jumper **50**, identical to octave jumper **46**, to provide at the output thereof, a signal having a fundamental frequency *f*/4 with all of its harmonics and having an amplitude envelope substantially duplicating the original amplitude envelope.

Each of octave jumpers **34**, **36** and **38** is, as stated above, identical to octave jumper **40**, except for the fact that it receives its input signal from a different transducer which, in turn, is responsive to vibrations of a different one of the four strings of this four string bass guitar. Accordingly, each of the octave jumpers **34**, **36**, and **38** provides at its output a signal including all harmonics and amplitude envelope, and having a fundamental that is one octave lower than the input thereto. Collectively, the four lower octave signals then appear at leads **52**, **54**, **56**, and **58** of the several octave jumpers, when switches (described below) in the output circuits of octave jumpers **34**, **36**, **38** and **40** are in the positions illustrated.

The output of each of the octave jumpers **34**, **36**, and **38**, like the output of octave jumper **40**, may be fed to a second octave jumper respectively indicated at **60**, **62**, and **64**. The lower frequency output on output leads **52**, **54**, **56** and **58** is either lowered by one or two octaves depending upon the position of the several switches **66**, **68**, **70** and **72**. These switches may be moved individually or in unison from the illustrated position thereof, wherein the frequency is lowered by a single octave to the other positions thereof wherein the frequency is lowered two octaves. Still further octave jumping employing additional groups of the described circuits may be provided.

Each octave jumper, as illustrated in detail in FIG. **3**, responds to its individual pickup **82** from which a signal is sent through a pre-amplifier **84**, there being one such pre-amplifier for each pickup. This provides on lead **132** the normal harmonic content signal of the individual string. This signal is then fed through a low pass filter **134** that is designed with a pass band for the fundamental of the signal on lead **132** whereby all (or substantially all) harmonics are blocked. The fundamental at the higher octave frequency is then fed to a squaring circuit **136** which may be of any convenient type such as, for example, an overdriven amplifier. The squaring circuit **136** provides a signal having steeply rising and falling leading and trailing edges one of which is conveniently used for triggering the standard bi-stable multi-vibrator or binary divider **142**. The latter changes its state once for each full cycle of the square wave output of circuit **136** whereby the square wave output of the divide by two circuit **142** is at half frequency, that is, one octave lower.

In order to derive a suitable amplitude modulation control signal, the original signal at the higher octave on line **132** is fed to a full wave rectifier **138**, thence through a smoothing circuit or filter **140** at the output of which is provided the amplitude modulation control signal. This modulation signal is fed via a resistor **141** to control the bias on a diode **144** that comprises the amplitude modulator **44** employed in the illustrated embodiment of this invention.

Diode **144** is a linear clipping diode having its anode connected to the junction of series resistors **143**, **145**, and its cathode connected to the resistor **141**. The resistor **143** and **145** are series connected in the output of divider **142**. Accordingly, the diode effectively provides a shunt path to the internal ground connections of filter **140** and rectifier **138**. When the cathode of diode **144** is high, the diode is back biased and all of the square wave is passed to the summing network. AS the control signal at the diode cathode goes more negative (or less positive) some of the square wave is shunted. Thus, more or less of the square wave output of divider **142** is shunted in accordance with the amplitude modulation control signal provided at the diode cathode by filter **140**.

It is emphasized that linearity of the modulator **144** is no problem in the described arrangement since the modulation is imposed upon the square wave output of the binary divider. A modulator of this type could not be used without introducing serious distortion if employed for modulation of a sawtooth or a sine wave or for modulation of other complex wave shapes. Thus, it will be seen that the amplitude modulation of the square wave itself by a clipping diode before any further wave shaping is attempted, greatly simplifies the required circuitry.

The amplitude modulated square wave is fed through resistor **145** and is combined with the original higher octave signal, with its amplitude variation and all of its harmonics. This is achieved via a resistor **146** to provide at output lead **148** the lower octave signal of desired harmonic content and amplitude envelope.

Resistors **145** and **146** are summing network input resistors. Together with an output resistor **147**, connected between ground and a common junction of the three resistors, they form the summing network **46** of FIG. **1**.

Thus, the described circuit receives the 80 Hz. signal on lead **132** and divides this signal by two by means of filter **134**, squarer **136**, and divider **142** to obtain the 40 Hz. square wave having only odd harmonics. The square wave is amplitude modulated with the envelope of the original 80 Hz. signal by means of rectifier **138**, filter **140** and clipping diode **144**. The 80 Hz. signal on lead **132** and the modulated 40 Hz. square are then combined in resistive summing network **145**, **146**, and **147**. On output lead **148** appears the lower octave signal with all harmonics and proper modulation. It is fed either directly or through a second octave jumper **50** to a system output (power) amplifier **150** that is arranged to be connected to a standard speaker system (not shown).

As previously indicated, the fact that amplitude modulation is imposed upon a square wave, greatly simplifies the circuitry required for such modulation. Actually, all that is required is an impedance at the output of the binary divider **142**, either in shunt or in series with the output of this circuit, that can be varied in accordance with the amplitude envelope of the higher octave tone signal. Thus, a variable potentiometer or a gain controlled amplifier could be employed. Nevertheless, fully satisfactory results are obtained by the much simpler and inexpensive clipping diode illustrated, whereby the latter, of course, is preferred.

The preferred simplified form of clipping gate can be applied in several different circuit arrangements. A shunt arrangement is illustrated in FIG. **3** operating to decrease the reverse bias applied to the diode cathode as the control or modulating signal decreases. Accordingly, as the normal input tone decays in amplitude, greater proportions of the output of the divide by two circuit **142** are fed through the shunt diode **144**, whereby the output signal fed to the summing network is similarly caused to decay.

A series connected clipping diode modulator is illustrated in FIG. **4** for use with a square wave provided at the output of divide by two circuit **142**. This series modulator comprises a pair of series connected diodes **152**, **154**, poled as illustrated and having the junction therebetween grounded through a resistor **156**. The modulating or control signal provided from the filter **140** provides a positive forward bias at the anode of diode **154** that decreases as the original tone input decays. As this forward bias decays, decreasing proportions of the square wave are passed through the diodes whereby the output of the modulator diodes decays in accordance with decay of the input tone signal.

As illustrated in FIG. **1**, the pickups for the several strings are preferably placed on or immediately adjacent the bridge device **16** in order to enable the octave jumper to properly discriminate against second harmonics. A common placement of electrical pickups for a stringed instrument is at a considerable distance from the bridge structure. Components of vibration of the string due to the first harmonic or fundamental have maximum excursions at the midpoint of the string. Those vibrations of the string due to the second harmonic have maxima at a point one-quarter of the distance from the string end or, more specifically, one-quarter of the distance from the point at which the string passes over the bridge. Of course, the effective length of the string varies as different frets of the fingerboard are employed. Thus, where the transducers or pickups are placed a considerable distance from the bridge, the quarter-length point of the several strings for at least some of the notes that are played will be considerably closer to the particular pickup position than will be the half-length point. In such a situation, the filter of the octave jumper may select a second harmonic, instead of the fundamental, since the former may appear to be of considerably greater magnitude. The low pass filter of the octave jumper has a band pass width of approximately one octave in order to accommodate the different fret positions of a given string and further, does not and cannot have an ideally sharp cutoff. Accordingly, in situations where magnitude of the second harmonic as detected by the pickup is substantially equal to or greater than the magnitude of the first harmonic, the octave jumper filter may respond to the second harmonic instead of to the first. This undesirable result is prevented by the pickup location as set forth at the beginning of this paragraph.

As the location of the pickup becomes closer to the bridge, excursions of all harmonics become less whereby greater sensitivity and increased preamplification of pickup output are required. Nevertheless, as the pickup is positioned closer to the bridge, the second harmonic amplitude, as sensed by the pickup, drops considerably more rapidly than the decrease in magnitude of the sensed fundamental. Accordingly, with the pickup at or closely adjacent the bridge, the second harmonic amplitude sensed by the pickup will be less than the fundamental amplitude. Thus the system will always discriminate against the second harmonic and the multivibrator divide by two circuit will always be controlled by the fundamental and not by the second harmonic. In such an arrangement, where pickups are to be placed directly on the bridge, it is most convenient to employ piezoelectric type pickups of a construction well known to those skilled in the art. For pickups placed immediately adjacent the bridge, other types of transducers such as conventional magnetic devices may be employed.

Schematically illustrated in FIG. **5** is a preferred location of ceramic piezoelectric transducers. String **158** is secured at its opposite ends to mounting pins **160**, **162** that are carried by the instrument structure schematically depicted at **164**. Tension holds one end of the string against the final fret or "nut" **166**. The other end of the string is held against a piezoelectric pickup **168** that is fixed to and carried upon a bridge device **170**. This is a preferred arrangement.

For use with magnetic pickups or other devices wherein it is not feasible to mount the pickup directly upon the bridge, the arrangement of FIG. **6** may be employed. In this configuration, string **172**, mounting pins **174**, **176**, instrument structure **178**, and nut **180** are all constructed and arranged just like the corresponding elements illustrated in FIG. **5**. In the configuration of FIG. **6**, however, the string is held directly against the bridge **184** which carries no transducer. The magnetic pickup **182** is mounted directly upon or within the instrument structure **178**, but positioned closely adjacent bridge **184** for reasons described above.

Although the octave jumper of the present invention has been described specifically in connection with an electric bass guitar, it will be readily appreciated that principles described herein may equally well be applied to a variety of other types of stringed instruments and, further, to a variety of other types of instruments, including percussion, reed, etc.

There has been described an octave jumping circuit and method that are simple and inexpensive and yet provide a faithful reproduction of the input, including harmonic content and amplitude envelope. Although the apparatus and method of the invention have been specifically described in an application that enables decrease in size of various elements and components of an electric bass guitar, the invention will be widely applicable in a variety of systems and devices wherever faithful reproduction of an electrical signal at a lower octave is desired.

The foregoing detailed description is to be clearly understood as given by way of illustration and example only, the spirit and scope of this invention being limited solely by the appended claims.

I claim:

1. Apparatus for lowering by one octave the frequency of an input signal having fundamental and harmonic frequencies, said apparatus comprising:

first means responsive to said input signal for generating a first signal component having a fundamental frequency one octave lower than that of said input signal, and also having odd harmonics of said lower fundamental,

means for amplitude modulating said first signal component in accordance with amplitude variations of said input signal, and

second means responsive to said input signal for combining with said modulated first signal component a second signal component having even harmonics of said lower fundamental.

2. The apparatus of claim 1 wherein said second signal includes:

an amplitude modulation envelope in accordance with amplitude variation of said input signal.

3. The apparatus of claim 2 wherein said lower fundamental frequency is one-half the fundamental frequency of said input signal, and

wherein said amplitude modulation means are such that the relative amplitudes of the odd harmonics of said first signal component and of the even harmonics of said second signal component are substantially the same as the relative amplitudes of corresponding harmonics of said input signal.

4. The apparatus of claim 1 wherein said first means includes:

a frequency divider, and

wherein said second means comprises a summing network having a first input from said input signal and a second input from said divider.

5. The apparatus of claim 1 wherein said means for amplitude modulating comprises:

a variable impedance device connected to attenuate said first signal component, and

means for varying the impedance of said device in accordance with the amplitude envelope of said input signal.

6. The apparatus of claim 4 wherein said amplitude modulating means comprises:

a diode connected to receive said first signal component from said divider, and

means for biasing the diode in accordance with amplitude variation of said input signal.

7. The apparatus of claim 1 wherein said first means comprises:

a low pass filter responsive to said input signal,

a squaring circuit responsive to said filter, and

a divide by two circuit responsive to said squaring circuit, and

wherein said amplitude modulating means comprises:

a clipping diode connected with the output of said divide by two circuit, and

means for biasing the diode in accordance with amplitude variation of said input signal.

8. The method of generating a lower octave signal from an input signal of a higher octave comprising the steps of:

squaring said input signal,

halving the frequency of the fundamental of said squared input signal,

amplitude modulating the resulting half frequency signal to make the amplitude of said half frequency signal correspond to the amplitude of said input signal, and

combining said input signal with said modulated half frequency signal.

9. The method of lowering a varying amplitude tone by an octave comprising the steps of:

converting the fundamental of said tone into a square wave having the same frequency as said fundamental,

dividing said square wave fundamental by two to obtain a square wave signal one octave lower than said fundamental,

amplitude modulating said square wave signal in accordance with the amplitude envelope of said tone, and

combining said tone and all of its harmonics with said lower octave modulated square wave signal.

10. The method of claim 9 wherein said amplitude modulating step comprises:

biasing a diode in accordance with said envelope, and

causing said diode to attenuate said square wave signal.

11. Apparatus for lowering by one octave a musical tone produced by a tone generator, said apparatus comprising:

a low pass filter responsive to said tone generator,

a squaring circuit responsive to the filter,

a divide by two circuit responsive to the squaring circuit,

an amplitude modulator responsive to said divide by two circuit,

said modulator having a controlling input from said tone generator, and

a summing network having inputs from said tone generator and from said modulator.

12. The apparatus of claim 11 wherein said modulator comprises a diode.

13. A circuit for musical instruments, comprising:

means for receiving from a musical instrument a first varying amplitude tone signal of a fundamental frequency f and harmonics thereof, and

octave jumping means responsive to said tone signal for producing a second tone signal of a fundamental frequency $f/2$ and harmonics thereof,

said second tone signal having an amplitude that varies in accordance with the amplitude variation of said first tone signal,

said octave jumping means comprising:

means responsive to said first tone signal for generating a square wave signal at said frequency $f/2$,

means for amplitude modulating said square wave signal in accordance with the amplitude envelope of said first tone signal, and

means for combining said first tone signal with the amplitude modulated square wave signal.

14. The apparatus of claim 13 wherein said means for generating a square wave signal comprises a divide by two circuit, said means for amplitude modulating said square wave signal comprising:

first and second resistors series connected in the output of the divide by two circuit,

a rectifier having an input from said first tone signal,

a filter having an input from said rectifier, and

a diode having one side thereof connected to the junction of said first and second resistors and the other side thereof connected to the output of said filter,

said means for combining comprising:

a resistive summing network having a first input resistor connected to receive said first tone signal,

said second resistor comprising a second input resistor of said summing network.

15. The apparatus of claim 13 wherein said means responsive to said first tone signal comprises a binary dividing circuit, said means for amplitude modulating said square wave signal comprising:

first and second diodes,

said first diode having one side thereof connected to the output of said binary dividing circuit and the other side thereof connected to a first side of the second diode,

a resistor connected between the junction of said diodes and ground,

a rectifier having an input from said first tone signal,

a filter having an input from said rectifier, and

a resistor connecting the output of said filter to the other side of said second diode,

said means for combining comprising:

a resistive summing network having a first input from said first tone signal and a second input from the other side of said second diode.

16. The apparatus of claim 13 wherein said circuit is combined with a musical instrument comprising:

an instrument body,

a bridge on said body,

a string having one end thereof extended over said bridge, and

a transducer carried by said body closely adjacent said bridge for providing to said circuit said first varying amplitude tone signal.

17. The apparatus of claim 13 wherein said circuit is combined with a musical instrument comprising:

a vibratile member, and

a transducer responsive to motion of said member for producing said first tone signal as an electrical output thereof.

18. The apparatus of claim 17 including

a bridge, and

wherein said vibratile member is a string having an end portion supported on the bridge,

said transducer being mounted for response to motion of said string at a point closely adjacent said bridge.

19. The apparatus of claim 18 wherein said transducer is mounted directly to said bridge between the bridge and said string end portion.

20. The apparatus of claim 13 wherein said means for generating a square wave comprises:

a low pass filter having as an input said first tone signal,

a squaring circuit having an input from said filter, and

a binary divider having an input from said squaring circuit.

21. The apparatus of claim 13 wherein said means for amplitude modulating comprises:

means responsive to the first tone signal for generating a modulating signal indicative of the amplitude envelope of said first tone signal,

a diode connected with the output of said square wave signal generating means, and

means for biasing the diode in accordance with said modulating signal.

22. The apparatus of claim 21 wherein said circuit is combined with a musical instrument comprising:

a string, and

a pickup responsive to motion of the string for producing said first tone signal as an electrical output.

23. The apparatus of claim 22 including a bridge, and wherein said string has an end portion supported on said bridge, and wherein said pickup is mounted closely adjacent said end portion of the string.

24. A bass guitar comprising

a guitar body,

a plurality of strings mounted to the body,

a plurality of pickups each mounted to the body for individual response to a respective one of said strings, and

a plurality of octave jumpers each respectively responsive to an input signal from an individual one of said pickups,

each said octave jumper comprising:

means responsive to the input signal generated by its individual pickup for generating a first signal component having a lower fundamental frequency lower than that of the input signal, and also having odd harmonics of said lower fundamental,

means for amplitude modulating said first signal component in response to said input signal, and

second means responsive to the input signal from the pickup for combining with said modulated first signal component a second signal component having even harmonics of said lower fundamental.

25. The bass guitar of claim 24 wherein said means for generating a first signal component comprises:

a low pass filter responsive to the individual pickup,

a wave squaring circuit responsive to the filter, and

a binary dividing circuit responsive to the squaring circuit,

said means for combining first and second signal components comprising:

a summing network having a first input from the individual transducer and a second input from the output of said binary dividing circuit.

26. A bass guitar comprising:

a guitar body,

a plurality of strings mounted to the body,

a plurality of pickups each mounted to the body for individual response to a respective one of said strings, and

a plurality of octave jumpers each respectively responsive to an input signal from an individual one of said pickups,

each said octave jumper comprising:

means responsive to the input signal generated by its individual pickup for generating a first signal component having a lower fundamental frequency lower than that of the input signal, and also having odd harmonics of said lower fundamental, said means for generating a first signal component comprising:

a low pass filter responsive to the individual pickup,

a wave squaring circuit responsive to the filter, and

a binary dividing circuit responsive to the squaring circuit,

a diode modulator connected to attenuate the output of said binary dividing circuit,

means responsive to the input signal from said individual pickup for biasing said diode modulator, and

second means responsive to the input signal from the pickup for combining with said first signal component a second signal component having even harmonics of said lower fundamental, said means for combining first and second signal components comprising:

a summing network having a first input from the individual transducer and a second input from the output of said binary dividing circuit.

* * * * *