(12) STANDARD PATENT (11) Application No. **AU 2019202371 B1**
(19) AUSTRALIAN PATENT OFFICE

(54) Title
An adjustable glasses frame

(51) International Patent Classification(s)
G02C 5/04 (2006.01)

(21) Application No: **2019202371** (22) Date of Filing: **2019.04.04**

(30) Priority Data

(31) Number	(32) Date	(33) Country
2019102395889	**2019.03.27**	**CN**

(43) Publication Date: **2020.07.16**
(43) Publication Journal Date: **2020.07.16**
(44) Accepted Journal Date: **2020.07.16**

(71) Applicant(s)
Ningbo Jiatai Eyewear Co., Ltd.

(72) Inventor(s)
Mao, Danyang

(74) Agent / Attorney
Ningbo Jiatai Eyewear Co., Ltd., G29/21 Beissel St, Belconnen, ACT, 2617, AU

(56) Related Art
US 1340879 A
US 2005/0270478 A1
WO 2018/047912 A1

2019202371 04 Apr 2019

ABSTRACT

This invention discloses an adjustable glasses frame, including a nose bridge 15. When distances between telescopic plates 17 and glasses legs 16 need to be adjusted, buttons 42 are pressed to driven spring plates 41 to move, and moving plates 35 and moving rods 33 are driven to move, and limiting blocks 37 are disengaged from limiting holes 29, and the glasses legs 16 are pulled to adjust the distances between the glasses legs 16 and the telescopic plates 17. Angles of the glasses frames can be adjusted, so the glasses frames on both sides are kept on the same plane. In addition, lengths of the glasses legs can be adjusted by telescopic mechanisms 80, so that wearers are more comfortable. Moreover, the cooperation between the glasses frames and the cover plates facilitates the dismounting and mounting of the lenses.

2019202371 29 Jun 2020

AN ADJUSTABLE GLASSES FRAME

TECHNICAL FIELD

[0001] The present invention relates to the field of glasses frame, in particular to an adjustable glasses frame.

BACKGROUND OF THE INVENTION

[0002] Glasses are used by a lot of people. It is difficult to remove and install lenses on general glasses frames, which is very troublesome and sometimes will damage the frames. In addition, if the general glasses frame is not on the same plane, it cannot be adjusted. Moreover, f it is bent by hand, the frame may be broken, and the length of the glasses leg cannot be adjusted.

BRIEF SUMMARY OF THE INVENTION

[0003] The technical problem to be solved by the invention is to provide an adjustable glasses frame so as to overcome the above-mentioned problems existing in the prior art.

[0004] An adjustable glasses frame according to an embodiment of the present invention comprises a nose bridge, wherein glasses frames are disposed on left and right sides of the nose bridge, wherein first lens grooves are disposed in the glasses frames, and front end surfaces of the glasses frames are fixedly provided with limiting plates; first through holes are arranged in the first lens grooves; cover plates are slidably mounted between the limiting plates and the glasses frames; second lens grooves are arranged in the cover plates, wherein lenses can be placed between the second lens grooves and the first lens grooves; second through holes are disposed in and communicated with front inner walls of the second lens grooves; pushing grooves located within the external edge of each cover plate relative to the

2019202371 29 Jun 2020

nose bridge, wherein pushing plates are slidably mounted in the pushing grooves, wherein rear end surfaces of the pushing plates are fixedly mounted with clamping blocks, and the clamping blocks are slidably connected with the cover plates; first springs are fixedly mounted between front end surfaces of the pushing plates and front inner walls of the pushing grooves; clamping grooves opened upward are arranged on front end surfaces of the glasses frames, wherein the clamping blocks can be clamped into the clamping grooves; whereby when the lenses need to be dismounted and mounted, the pushing plates can be pushed to move forward, so that the clamping blocks are disengaged from the clamping grooves, and then the cover plates slide out so as to dismount and mount the lenses; an adjusting mechanism which can adjust angles of the glasses frames on both sides is arranged in the nose bridge; fixing blocks in longitudinal symmetry are fixedly arranged on rear end surfaces of the glasses frames, wherein fixing rods are rotatably mounted between the fixing blocks, wherein rotating blocks are fixedly mounted on the fixing rods, wherein telescopic plates are fixedly mounted on the rotating blocks, wherein the telescopic plates are internally provided with telescopic mechanisms, wherein rear end surfaces of the telescopic mechanisms are provided with sliding grooves, wherein sliding plates are slidably mounted in the sliding grooves, wherein rear end surfaces of the sliding plates are fixedly provided with glasses legs, and the telescopic mechanisms can adjust distances between the telescopic plates and the glasses legs.

[0005] In a further technical proposal, the telescopic mechanisms further comprise limiting holes arranged in the sliding plates; motion grooves are disposed in the sliding grooves in a communicating manner, wherein limiting blocks are slidably mounted in the motion grooves, and the limiting blocks can be locked into the limiting holes, wherein the limiting blocks are internally provided with auxiliary grooves, wherein auxiliary rods are rotatably mounted between front and rear inner walls of the auxiliary grooves, wherein connecting rods are fixedly mounted on the auxiliary rods; connecting grooves are disposed between and communicated with the motion grooves, wherein motion cavities are disposed on and communicated with front and rear sides of the connecting grooves; moving plates are slidably mounted in the motion cavities, wherein moving rods are rotatably mounted between

2019202371 29 Jun 2020

the moving plates, and the moving rods are fixedly connected with the connecting rods; spring cavities are communicated with the motion cavities, wherein spring plates are slidably mounted in the spring cavities, and the spring plates are fixedly connected with the moving plates; second springs are fixedly mounted between the spring plates and the spring cavities; button cavities are communicated with the spring cavities, wherein buttons are slidably mounted in the button cavities; spring rods are fixedly connected between the buttons and the spring plates; third springs are fixedly mounted between the buttons and the spring plates.

[0006] In a further technical proposal, the adjusting mechanism further comprises gear cavities disposed in the nose bridge in a bilateral symmetrical manner, wherein first gear rods which are penetrated through the gear cavities are fixedly mounted on the glasses frames, and the first gear rods are rotatably connected with the nose bridge; first bevel gears are fixedly mounted on the first gear rods; second gear rods are rotatably mounted in bottom walls of the gear cavities; second bevel gears are fixedly mounted on top end surfaces of the second gear rods, wherein the second bevel gears are engaged with the first bevel gears; adjustment cavities opened downward are disposed in top end surfaces of the second gear rods; whereby when the glasses frames on both sides are not in a plane, the second gear rods can be rotated by the adjustment cavities, and the first gear rods are driven to rotate through engagement of the second bevel gears and the first bevel gears, and thus, the glasses frames are rotated to adjust angles thereof.

[0007] The invention has the advantageous effects that the angles of the glasses frames on both sides can be adjusted, so that the glasses frames on both sides are kept on the same plane. In addition, the lengths of the glasses legs can be adjusted by the telescopic mechanisms, so that the wearer is more comfortable in wearing. What's more, the cooperation between the glasses frames and the cover plates facilitates the dismounting and mounting of the lenses. Therefore, the adjustable glasses frame is worth promoting.

BRIEF DESCRIPTION OF THE DRAWINGS

2019202371 29 Jun 2020

[0008] FIG.1 is a schematic structural diagram of an adjustable glasses frame in this invention.

[0009] FIG.2 is the top view of the adjustable glasses frame in this invention.

[0010] FIG.3 is a cross-sectional view along “A-A” direction in FIG.1.

[0011] FIG.4 is a cross-sectional view along “B-B” direction in FIG.1.

[0012] FIG.5 is a cross-sectional view along “C-C” direction in FIG.2.

[0013] FIG.6 is an enlarged schematic structural diagram of “D” in FIG.5.

[0014] FIG.7 is a cross-sectional view along “E-E” direction in FIG.6.

DETAILED DESCRIPTION OF THE INVENTION

[0015] Referring to Figures 1-7, an adjustable glasses frame according to an embodiment of the present invention comprises a nose bridge 15, wherein glasses frames 13 are disposed on left and right sides of the nose bridge 15, wherein first lens grooves 12 are disposed in the glasses frames 13, and front end surfaces of the glasses frames 13 are fixedly provided with limiting plates 11; first through holes 14 are arranged in the first lens grooves 12; cover plates 53 are slidably mounted between the limiting plates 11 and the glasses frames 13; second lens grooves 52 are arranged in the cover plates 53, wherein lenses can be placed between the second lens grooves 52 and the first lens grooves 12; second through holes 54 are disposed in and communicated with front inner walls of the second lens grooves 52; pushing grooves 50 located within the external edge of each cover plate 53 relative to the nose bridge 15, wherein pushing plates 49 are slidably mounted in the pushing grooves 50, wherein rear end surfaces of the pushing plates 49 are fixedly mounted with clamping blocks 47, and the clamping blocks 47 are slidably connected with the cover plates 53; first springs 51 are

2019202371 29 Jun 2020

fixedly mounted between front end surfaces of the pushing plates 49 and front inner walls of the pushing grooves 50; clamping grooves 46 opened upward are arranged on front end surfaces of the glasses frames 13, wherein the clamping blocks 47 can be clamped into the clamping grooves 46; whereby when the lenses need to be dismounted and mounted, the pushing plates 49 can be pushed to move forward, so that the clamping blocks 47 are disengaged from the clamping grooves 46, and then the cover plates 53 slide out so as to dismount and mount the lenses; an adjusting mechanism 70 which can adjust angles of the glasses frames 13 on both sides is arranged in the nose bridge 15; fixing blocks 18 in longitudinal symmetry are fixedly arranged on rear end surfaces of the glasses frames 13, wherein fixing rods 19 are rotatably mounted between the fixing blocks 18, wherein rotating blocks 20 are fixedly mounted on the fixing rods 19, wherein telescopic plates 17 are fixedly mounted on the rotating blocks 20, wherein the telescopic plates 17 are internally provided with telescopic mechanisms 80, wherein rear end surfaces of the telescopic mechanisms 80 are provided with sliding grooves 27, wherein sliding plates 28 are slidably mounted in the sliding grooves 27, wherein rear end surfaces of the sliding plates 28 are fixedly provided with glasses legs 16, and the telescopic mechanisms 80 can adjust distances between the telescopic plates 17 and the glasses legs 16.

[0016] The telescopic mechanisms 80 further comprise limiting holes 29 arranged in the sliding plates 28; motion grooves 36 are disposed in the sliding grooves 27 in a communicating manner, wherein limiting blocks 37 are slidably mounted in the motion grooves 36, and the limiting blocks 37 can be locked into the limiting holes 29, wherein the limiting blocks 37 are internally provided with auxiliary grooves 30, wherein auxiliary rods 31 are rotatably mounted between front and rear inner walls of the auxiliary grooves 30, wherein connecting rods 32 are fixedly mounted on the auxiliary rods 31; connecting grooves 34 are disposed between and communicated with the motion grooves 36, wherein motion cavities 40 are disposed on and communicated with front and rear sides of the connecting grooves 34; moving plates 35 are slidably mounted in the motion cavities 40, wherein moving rods 33 are rotatably mounted between the moving plates 35, and the moving rods 33 are fixedly connected with the connecting rods 32; spring cavities 38 are communicated with the

2019202371 29 Jun 2020

motion cavities 40, wherein spring plates 41 are slidably mounted in the spring cavities 38, and the spring plates 41 are fixedly connected with the moving plates 35; second springs 39 are fixedly mounted between the spring plates 41 and the spring cavities 38; button cavities 44 are communicated with the spring cavities 38, wherein buttons 42 are slidably mounted in the button cavities 44; spring rods 43 are fixedly connected between the buttons 42 and the spring plates 41; third springs 45 are fixedly mounted between the buttons 42 and the spring plates 41; whereby when distances between the telescopic plates 17 and the glasses legs 16 need to be adjusted, the buttons 42 are pressed to drive the spring plates 41 to move, and the moving plates 35 and the moving rods 33 are driven to move, and the moving rods 33 are moved to drive the connecting rods 32 to move close to each other, and then the limiting blocks 37 are disengaged from the limiting holes 29, and then the glasses legs 16 are pulled so as to adjust the distances between the glasses legs 16 and the telescopic plates 17.

[0017] The adjusting mechanism 70 further comprises gear cavities 26 disposed in the nose bridge 15 in a bilateral symmetrical manner, wherein first gear rods 22 which are penetrated through the gear cavities 26 are fixedly mounted on the glasses frames 13, and the first gear rods 22 are rotatably connected with the nose bridge 15; first bevel gears 21 are fixedly mounted on the first gear rods 22; second gear rods 24 are rotatably mounted in bottom walls of the gear cavities 26; second bevel gears 25 are fixedly mounted on top end surfaces of the second gear rods 24, wherein the second bevel gears 25 are engaged with the first bevel gears 21; adjustment cavities 23 opened downward are disposed in top end surfaces of the second gear rods 24; whereby when the glasses frames 13 on both sides are not in a plane, the second gear rods 24 can be rotated by the adjustment cavities 23, and the first gear rods 22 are driven to rotate through engagement of the second bevel gears 25 and the first bevel gears 21, and thus, the glasses frames 13 are rotated to adjust angles thereof.

[0018] In use, when the lenses need to be dismounted and mounted, the pushing plates 49 can be pushed to move forward, so that the clamping blocks 47 are disengaged from the clamping grooves 46, and then the cover plates 53 slide out so as to dismount and mount the lenses; when the distances between the telescopic plates 17 and the glasses legs 16 need to be

2019202371 29 Jun 2020

adjusted, the buttons 42 are pressed to driven the spring plates 41 to move, and the moving plates 35 and the moving rods 33 are driven to move, and the moving rods 33 are moved to drive the connecting rods 32 to move close to each other, and then the limiting blocks 37 are disengaged from the limiting holes 29, and then the glasses legs 16 are pulled so as to adjust the distances between the glasses legs 16 and the telescopic plates 17; and when the glasses frames 13 on both sides are not in a plane, the second gear rods 24 can be rotated by the adjustment cavities 23, and the first gear rods 22 are driven to rotate through engagement of the second bevel gears 25 and the first bevel gears 21, and thus, the glasses frames 13 are rotated to adjust the angles thereof.

[0019] The invention has the advantageous effects that the angles of the glasses frames on both sides can be adjusted, so that the glasses frames on both sides are kept on the same plane. In addition, the lengths of the glasses legs can be adjusted by the telescopic mechanisms, so that the wearer is more comfortable in wearing. What's more, the cooperation between the glasses frames and the cover plates facilitates the dismounting and mounting of the lenses. Therefore, the adjustable glasses frame is worth promoting.

[0020] Persons skilled in the art should understand that, the invention will be subject to modification and improvement based on its intention and extent, which will also fall into the claimed protection extent of this invention. The claimed protection extent of the invention shall be determined with reference to the appended claims.

2019202371 29 Jun 2020

CLAIMS

1. An adjustable glasses frame, comprising:

a nose bridge,

wherein glasses frames are disposed on left and right sides of the nose bridge,

wherein first lens grooves are disposed in the glasses frames, and front end surfaces of the glasses frames are fixedly provided with limiting plates;

first through holes arranged in the first lens grooves;

cover plates slidably mounted between the limiting plates and the glasses frames;

second lens grooves arranged in the cover plates,

wherein lenses can be placed between the second lens grooves and the first lens grooves;

second through holes disposed in and communicated with front inner walls of the second lens grooves;

pushing grooves located within the external edge of each cover plate relative to the nose bridge,

wherein pushing plates are slidably mounted in the pushing grooves,

wherein rear end surfaces of the pushing plates are fixedly mounted with clamping blocks, and the clamping blocks are slidably connected with the cover plates;

2019202371 29 Jun 2020

first springs fixedly mounted between front end surfaces of the pushing plates and front inner walls of the pushing grooves;

clamping grooves opened upward arranged on front end surfaces of the glasses frames,

wherein the clamping blocks can be clamped into the clamping grooves;

whereby when the lenses need to be dismounted and mounted, the pushing plates can be pushed to move forward, so that the clamping blocks are disengaged from the clamping grooves, and then the cover plates slide out so as to dismount and mount the lenses;

an adjusting mechanism, which can adjust angles of the glasses frames on both sides, arranged in the nose bridge;

fixing blocks in longitudinal symmetry fixedly arranged on rear end surfaces of the glasses frames,

wherein fixing rods are rotatably mounted between the fixing blocks,

wherein rotating blocks are fixedly mounted on the fixing rods, wherein telescopic plates are fixedly mounted on the rotating blocks,

wherein the telescopic plates are internally provided with telescopic mechanisms,

wherein rear end surfaces of the telescopic mechanisms are provided with sliding grooves,

wherein sliding plates are slidably mounted in the sliding grooves,

wherein rear end surfaces of the sliding plates are fixedly provided with glasses legs, and the telescopic mechanisms can adjust distances between the telescopic plates and the glasses legs.

2019202371 29 Jun 2020

2. The adjustable glasses frame according to claim 1, wherein the telescopic mechanisms further comprise:

limiting holes arranged in the sliding plates;

motion grooves disposed in the sliding grooves in a communicating manner,

wherein limiting blocks are slidably mounted in the motion grooves, and the limiting blocks can be locked into the limiting holes,

wherein the limiting blocks are internally provided with auxiliary grooves,

wherein auxiliary rods are rotatably mounted between front and rear inner walls of the auxiliary grooves,

wherein connecting rods are fixedly mounted on the auxiliary rods;

connecting grooves disposed between and communicated with the motion grooves,

wherein motion cavities are disposed on and communicated with front and rear sides of the connecting grooves;

moving plates slidably mounted in the motion cavities,

wherein moving rods are rotatably mounted between the moving plates, and the moving rods are fixedly connected with the connecting rods;

spring cavities communicated with the motion cavities,

wherein spring plates are slidably mounted in the spring cavities, and the spring plates are

2019202371 29 Jun 2020

fixedly connected with the moving plates;

second springs fixedly mounted between the spring plates and the spring cavities;

button cavities communicated with the spring cavities,

wherein buttons are slidably mounted in the button cavities;

spring rods fixedly connected between the buttons and the spring plates;

third springs fixedly mounted between the buttons and the spring plates;

whereby when distances between the telescopic plates and the glasses legs need to be adjusted, the buttons are pressed to drive the spring plates to move, and the moving plates and the moving rods are driven to move, and the moving rods are moved to drive the connecting rods to move close to each other, and then the limiting blocks are disengaged from the limiting holes, and then the glasses legs are pulled so as to adjust the distances between the glasses legs and the telescopic plates.

3. The adjustable glasses frame according to claim 1, wherein the adjusting mechanism further comprises:

gear cavities disposed in the nose bridge in a bilateral symmetrical manner,

wherein first gear rods which are penetrated through the gear cavities are fixedly mounted on the glasses frames, and the first gear rods are rotatably connected with the nose bridge,

wherein first bevel gears are fixedly mounted on the first gear rods;

second gear rods rotatably mounted in bottom walls of the gear cavities,

2019202371 29 Jun 2020

wherein second bevel gears are fixedly mounted on top end surfaces of the second gear rods,

wherein the second bevel gears are engaged with the first bevel gears, and adjustment cavities opened downward are disposed in top end surfaces of the second gear rods;

whereby when the glasses frames on both sides are not in a plane, the second gear rods can be rotated by the adjustment cavities, and the first gear rods are driven to rotate through engagement of the second bevel gears and the first bevel gears, and thus, the glasses frames are rotated to adjust angles thereof.

2019202371 04 Apr 2019

DRAWINGS

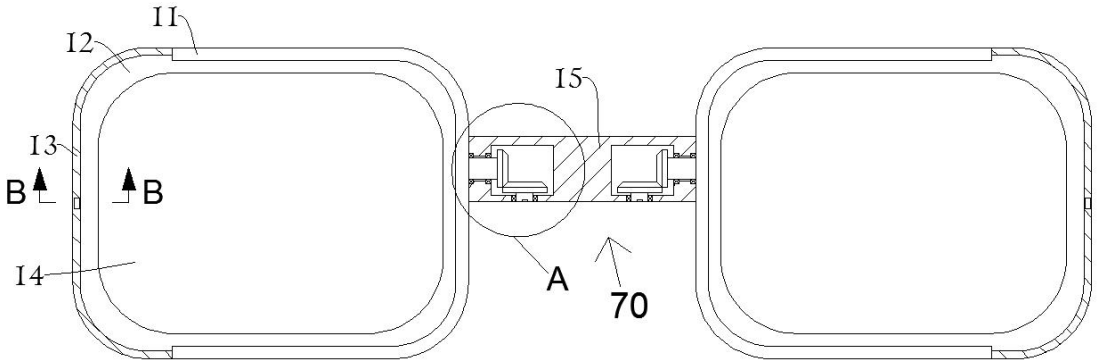

Figure 1

2019202371 04 Apr 2019

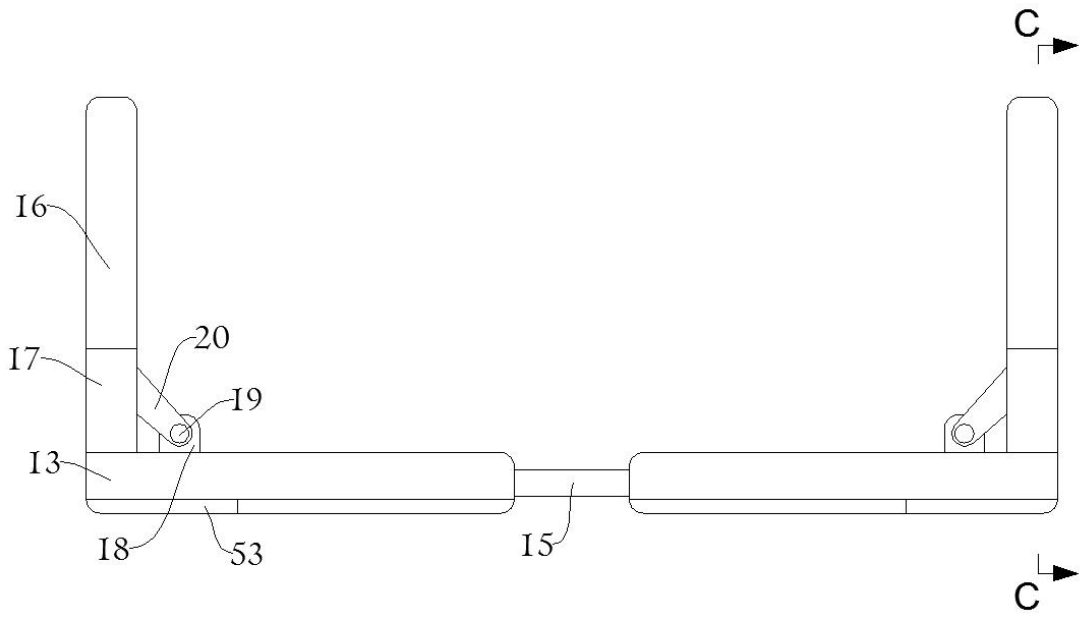

Figure 2

2019202371 04 Apr 2019

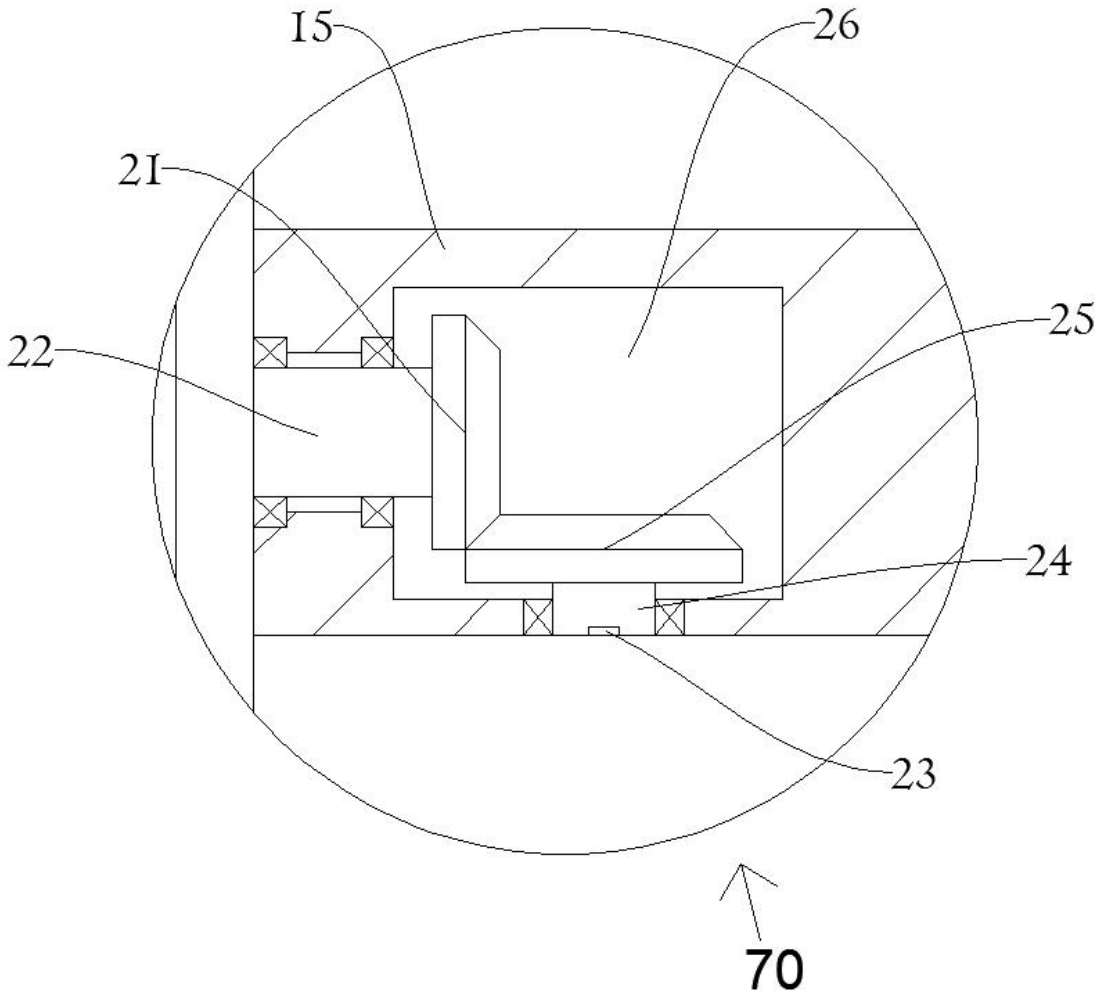

Figure 3

2019202371 04 Apr 2019

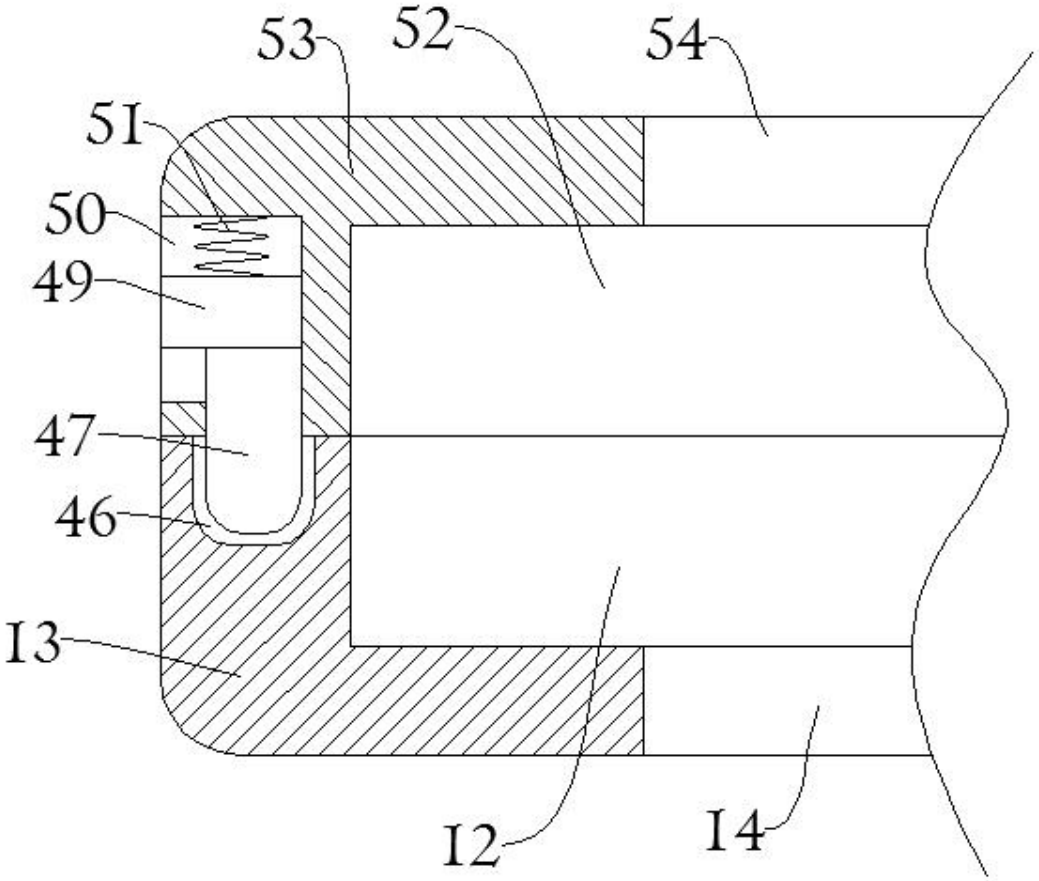

Figure 4

2019202371 04 Apr 2019

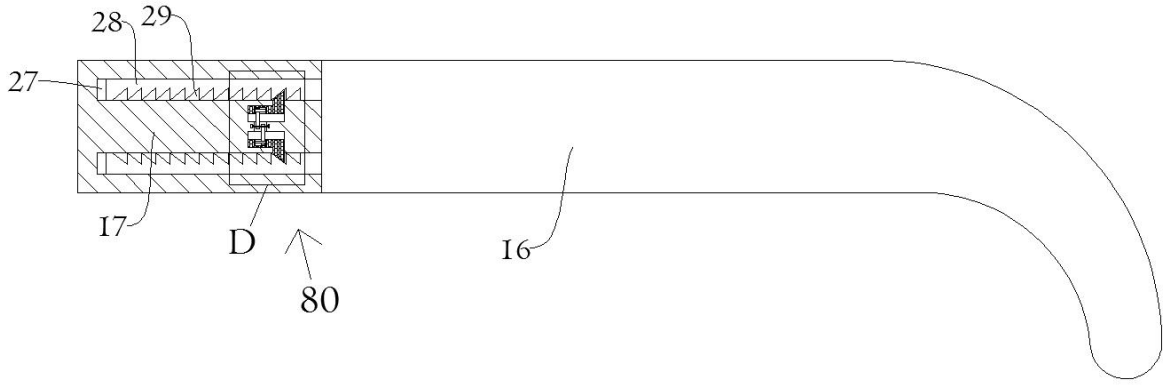

Figure 5

2019202371 04 Apr 2019

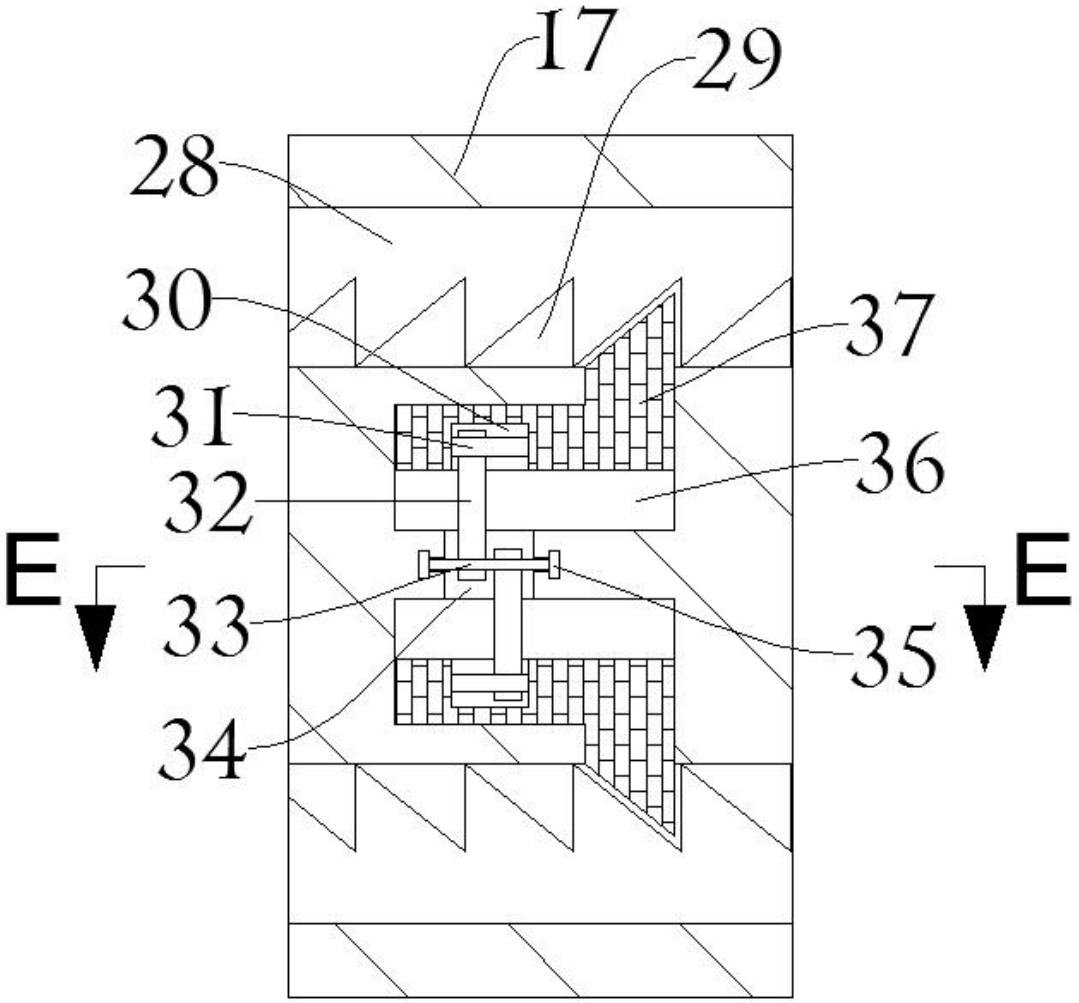

Figure 6

2019202371 04 Apr 2019

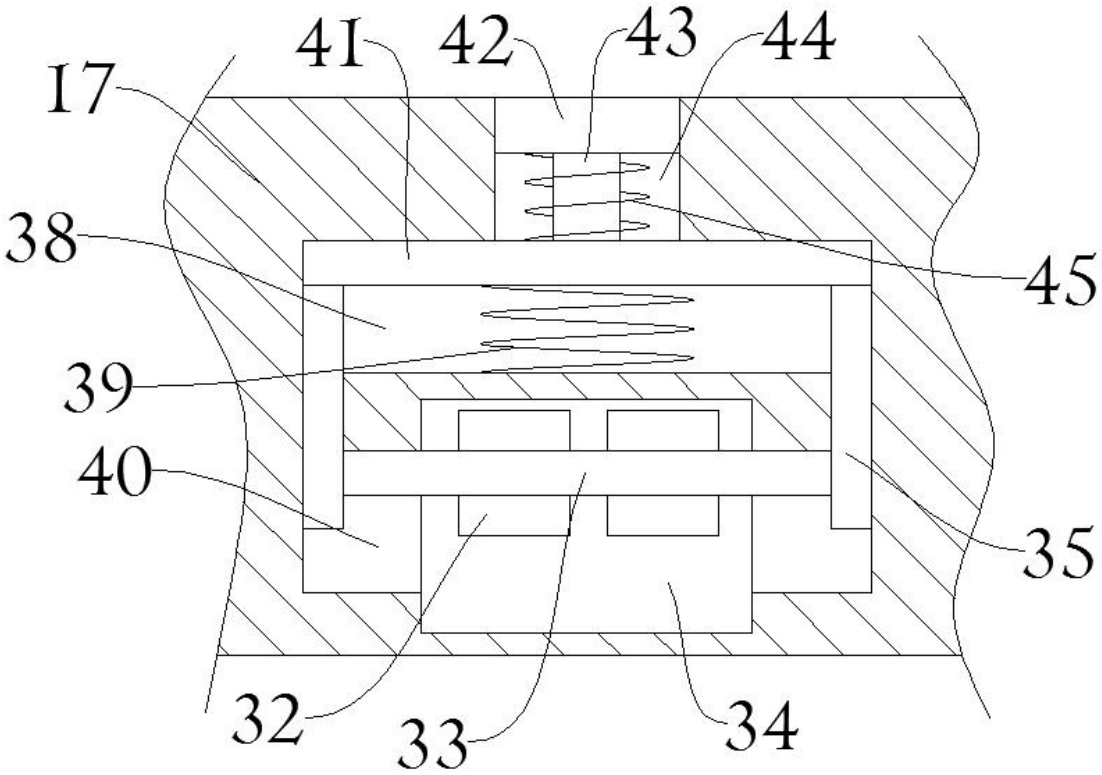

Figure 7