(12) INTERNATIONAL APPLICATION PUBLISHED UNDER THE PATENT COOPERATION TREATY (PCT)

(19) World Intellectual Property Organization
International Bureau

(43) International Publication Date
30 April 2020 (30.04.2020)

WIPO | PCT

(10) International Publication Number
WO 2020/085895 A1

(51) International Patent Classification:
B65D 3/10 (2006.01) *B65D 3/28* (2006.01)
B65D 3/14 (2006.01) *B65D 51/18* (2006.01)
B65D 3/22 (2006.01) *B65D 43/16* (2006.01)
B65D 3/26 (2006.01) *B65D 21/02* (2006.01)

(21) International Application Number:
PCT/NL2018/050696

(22) International Filing Date:
22 October 2018 (22.10.2018)

(25) Filing Language: English

(26) Publication Language: English

(71) Applicant: **N.V. NUTRICIA** [NL/NL]; Eerste Stationsstraat 186, 2712 HM Zoetermeer (NL).

(72) Inventor: **SCHOOT UITERKAMP, Andreus Johannes Maria**; Uppsalalaan 12, 3584 CT Utrecht (NL).

(74) Agent: **NEDERLANDSCH OCTROOIBUREAU (NLO)**; P.O. Box 29720, 2502 LS The Hague (NL).

(81) Designated States *(unless otherwise indicated, for every kind of national protection available)*: AE, AG, AL, AM, AO, AT, AU, AZ, BA, BB, BG, BH, BN, BR, BW, BY, BZ, CA, CH, CL, CN, CO, CR, CU, CZ, DE, DJ, DK, DM, DO, DZ, EC, EE, EG, ES, FI, GB, GD, GE, GH, GM, GT, HN, HR, HU, ID, IL, IN, IR, IS, JO, JP, KE, KG, KH, KN, KP, KR, KW, KZ, LA, LC, LK, LR, LS, LU, LY, MA, MD, ME, MG, MK, MN, MW, MX, MY, MZ, NA, NG, NI, NO, NZ, OM, PA, PE, PG, PH, PL, PT, QA, RO, RS, RU, RW, SA, SC, SD, SE, SG, SK, SL, SM, ST, SV, SY, TH, TJ, TM, TN, TR, TT, TZ, UA, UG, US, UZ, VC, VN, ZA, ZM, ZW.

(54) Title: RECYCLABLE PAPERBOARD CONTAINER

Fig. 1

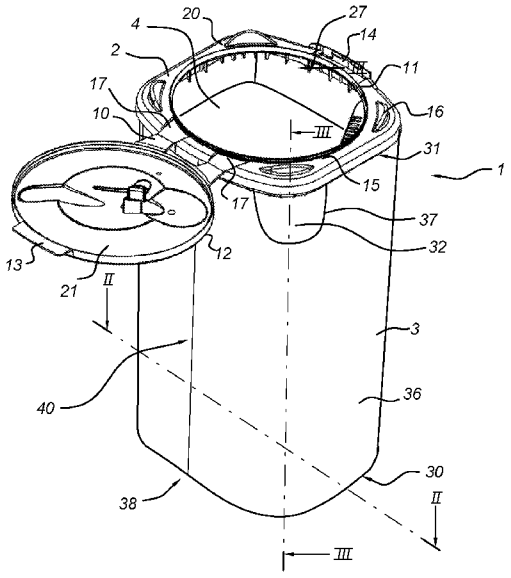

(57) Abstract: A package (1) for a powdered nutritional product. The package (1) includes a sidewall (36) of tubular shape having an upper end (31) and a lower end (30), made from a sheet of paperboard laminate. The laminate sheet has opposed edges (39A, 39) brought together and butt-jointed at a vertical seam (40) and comprises at least an innermost layer of heat-sealable polymer, an oxygen barrier layer (46) and a core layer (44) of paperboard, the sidewall (36) further comprising an outermost detection layer (50). A base (38) is joined to and closes the lower end (30) of the sidewall (36) to form a container (3) defining a product containing space in which a quantity of the powdered nutritional product is located. The product containing space is hermetically closed prior to use by a membrane seal (4) which is at least partially removable to gain access to the product. The package (1) also includes a closure (2). The closure (2) has a circumferential rim (20) connected to the upper end (31) of the sidewall (36) defining an access opening (27) and a lid (21),

WO 2020/085895 A1

[Continued on next page]

(84) Designated States *(unless otherwise indicated, for every kind of regional protection available)*: ARIPO (BW, GH, GM, KE, LR, LS, MW, MZ, NA, RW, SD, SL, ST, SZ, TZ, UG, ZM, ZW), Eurasian (AM, AZ, BY, KG, KZ, RU, TJ, TM), European (AL, AT, BE, BG, CH, CY, CZ, DE, DK, EE, ES, FI, FR, GB, GR, HR, HU, IE, IS, IT, LT, LU, LV, MC, MK, MT, NL, NO, PL, PT, RO, RS, SE, SI, SK, SM, TR), OAPI (BF, BJ, CF, CG, CI, CM, GA, GN, GQ, GW, KM, ML, MR, NE, SN, TD, TG).

Published:

— *with international search report (Art. 21(3))*

Recyclable Paperboard Container

BACKGROUND OF THE INVENTION

1. Field of the invention

The present invention relates to packages for the packaging and dispensing of products, in particular powdered products such as infant nutrition or milk formula. The invention relates in particular to constructions of such packages for the purpose of improving recycling.

2. Description of the related art

Powdered material, such as infant milk formula, has been sold in various forms of package for many years. Metal cans were initially the preferred container as they were relatively easy and cheap to produce and could be sealed for long term storage. The seal comprised an aluminium foil across the mouth of the container that was removed on first use. As a single container would be used for an extended period, the containers were provided with re-closable plastic lids which connected over the outer rim of the can. A measuring scoop was frequently included with the container, either packaged separately or within the can itself. Such cans are however relatively heavy and expensive to produce.

More recently, alternative packaging forms have become available which improve on the existing cans, including the Cekacan™ range from Å&R Carton Lund AB. These are based on plastic and foil laminate tubular container bodies and often include closures in the form of hinged lid assemblies having a facility to receive and retain a measuring scoop. One such package is described in WO 2010/123361. The container part may consist of a laminate of paperboard, metal foil and plastic material, while the lid assembly may consist of plastic.

While these materials allow the container to be produced relatively cheaply, the use of these materials in combination may be disadvantageous for recycling of the containers. In light of the above, it would be desirable to provide an improved package that at least partially overcomes some of the inconveniences of the prior art.

Other packages that are frequently encountered are the well-known brick packages such as those developed under the name TetraPak™. These packages are also based on plastic, paperboard and foil laminate bodies and it has already been recognised that such laminates represent a recycling challenge. Brick packages tend to be constructed with the laminate material either connected face-to-face or overlapped. Face-to-face connection, sometimes referred to as a fin-seal, relies upon a heat-sealable layer on the innermost surfaces engaging together. Overlapped connection requires a heat-sealable layer as both the inner and outermost layers. Some packages use a mixture of both e.g. with a longitudinal seam overlapped and the ends of the package joined face-to-face.

SUMMARY OF THE INVENTION

According to the invention there is provided a package for a powdered nutritional product. The package includes a sidewall of tubular shape having an upper end and a lower end, made from a sheet of paperboard laminate. The laminate sheet has opposed edges brought together and butt-jointed at a vertical seam and comprises at least an innermost layer of heat-sealable polymer, an oxygen barrier layer and a core layer of paperboard, the sidewall further comprising an outermost detection layer. A base is joined to and closes the lower end of the sidewall to form a container defining a product containing space in which a quantity of the powdered nutritional product is located. The product containing space is hermetically closed prior to use by a membrane seal which is at least partially removable to gain access to the product. The package also includes a closure, sometimes referred to as a finish or 'toptainer', which may be made of plastic material. The closure has a circumferential rim connected to the upper end of the sidewall defining an access opening and a lid, pivotably attached to the rim, for selectively closing the access opening.

As a result of the proposed construction, the package may be more efficiently recycled and sorted into separate recycle streams. In particular, the plastic closure may be separated from the remainder of the package – namely the sidewall and base. This remainder, also referred to below as the container, may then be included into the 'brick' recycle stream by identification of the detection layer and/or further layers of the laminate, using near infrared (NIR) sorting technology. NIR can identify paperboard laminates but cannot usually distinguish them from (non-laminate) paper or card. By providing a detection layer that identifies the particular laminate, sorting can be facilitated. A preferred form of detection layer is a polyolefin layer such as a polyethylene (PE) layer.

In an embodiment, the closure is of plastic material and can be recycled to fabricate new products. Such a closure may be formed by injection moulding and is a relatively expensive part of the total package due to the volume of plastic used. Clean separation, in which virtually no non-plastic components are attached to the closure, would be advantageous. It would also be advantageous for recycling purposes to end up with a container without any remainders of the closure.

As the packages are often used for milk powder for babies and infants, it is very important that the packages are sealed and remain sealed before first use. For reasons of durability, safety, insect-tightness and convenient transportation, the closure may thus be very tightly adhered to the container, preferably using an adhesive. In present designs, the adhesive and mechanical connection have been optimised with these reasons in mind. As a consequence, recycling of the different components is complicated because, due to the effectiveness of the connection, they cannot easily be separated by hand. In fact existing packages are so well constructed that it is almost impossible to separate the closure and container without some form of tool. In one embodiment, the package include a separation region for facilitating the separation of the closure from the sidewall after use, the separation region comprising a point or line of weakness where separation can be initiated or facilitated by a user.

The separation region facilitates the separation of the closure and the container, as will be further explained below and is defined as the region in which the point or line of weakness is located

at which separation of the closure from the container occurs. Depending upon the choice of location for the point or line of weakness, the separation region may be part of the closure, the sidewall adjacent to and below the closure or may comprise part of both the closure and the container. Similarly, the line of weakness may be formed in the circumferential rim of the plastic closure and/or the sidewall of the container located above the seal.

In this context, reference to carton is intended to denote paper or pulp based materials, sometimes referred to as cardboard, paperboard or fibreboard, for which a different recycling process is intended and/or desired than that for the plastic closure.

As the separation region comprises the point or line of weakness, it is important that this region is located above the seal that closes the container prior to use. This is of relevance since it should be ensured that the container contents remain sealed and unspoiled in a gas-tight manner. This is of particular interest where infant formula is concerned, as infants are vulnerable and, when breast feeding is not possible, may depend solely on intake of infant formula. By placing the separation region above the membrane seal, the contents of the sealed container are not jeopardized, even in case of unintended puncture or rupture of the point or line of weakness.

In the present context, the membrane seal is intended to denote a gas-tight seal, for hermetically closing the container prior to use. The contents of the package, namely the powdered nutritional product, may be packaged under a modified atmosphere e.g. with a high level of inert gas/depleted oxygen. The membrane seal is then intended to ensure the contents are kept under the modified atmosphere until the user breaks the seal, such as is the case with any infant formula.

In an embodiment, the membrane seal is made of barrier material or comprises a barrier layer that acts as a high barrier to passage of oxygen. The membrane seal may comprise an aluminium barrier layer In alternative embodiments, and in order to improve recycling, the membrane seal may be aluminium free. In the present context, aluminium fee is intended to denote that it is free of an aluminium metal layer. This does not mean that the membrane seal need be free of all aluminium, since at least aluminium oxide is known as a good barrier material, even when present in thicknesses below 1 micron. Other forms of barrier layer or layers may thus be provided, including ethylene vinyl alcohol (EVOH) and similar polymeric oxygen barriers, with or without scavengers. Alternatively, inorganic oxide layers may be used such as silicon oxide and aluminium oxide.

The membrane seal is connected to the inside of the peripheral wall, and must be at least partially removable to gain access to the product. In a preferred embodiment, the membrane seal is located below the separation region and connected to the inside of the sidewall at a distance below the upper end, such as between 15 and 50 mm or between 20 mm and 40 mm or between 25 and 35 mm. The membrane seal may be located at a distance below the upper end to allow accommodation of an infant formula dosing scoop in the void space between the closure and the membrane seal.

In an embodiment, the membrane seal is connected to the innermost layer of the sidewall by an appropriate sealing techniques, which may be e.g. heat-sealing, ultrasonic sealing or induction-sealing. It will be understood that the butt-joint construction of the sidewall is more easily joined to

the membrane seal in a hermetic manner than an overlap joint. Preferably, the membrane seal is partially removable in the sense that it comprises a tear-strip configured to be torn along a tear-path and to leave a part of the seal attached to the inside of the sidewall. With this opening mechanism, a part of the membrane seal is left in the container when the tear strip is torn, and the membrane seal is therefore not completely removed when opened but only a central panel thereof to gain access to the product. For the avoidance of doubt, the opening mechanism and tear path of the membrane seal is distinct from the separation region and point/line of weakness by which the closure and container are separated.

The detection layer may be any layer that allows positive identification by appropriate sorting and separation equipment. The most widely used such equipment presently relies upon NIR detection and the detection layer is preferably responsive to NIR radiation. Such a layer may be referred to as a NIR detection layer. A polymer layer may be preferred as NIR can uniquely distinguish most polymers. The detection layer may comprise the same polymer as used for conventional brick packages or may be distinct. In the latter case, the distinct layer may allow a specific treatment for the package e.g. removal and separation of the closure.

In a preferred embodiment, the detection layer can be present as the outermost layer of the laminate. It may have a thickness of that is appropriate to allow its detection by suitable equipment such as NIR. In some cases, it may be necessary to detect not only the detection layer but also the underlying layer or layers, such as the paperboard layer. For this reason, a maximum thickness of the detection layer may be required. The detection layer may be from 5 micron to 50 microns or from 10 microns to 25 microns or around 15 microns in thickness. In other embodiments, the detection layer may be added to the sidewall e.g. as an additional layer e.g. as a wrapper or label. A shrink fit wrapper may be contemplated or a label comprising an adhesively applied detection layer, which may overlay a paper layer.

It will be understood that for butt-jointed constructions i.e. without overlap, a polymer layer on the outermost surface is largely superfluous and in the present case is only applied for its function as a detection or identification layer. Nevertheless, in one embodiment, the detection layer may comprises a heat-sealable polymer material. This heat-sealable layer may then serve a double function as both a detection layer and as a heat seal layer as further described below. The heat-sealable layer may be a polyolefin, preferably polyethylene. It may be the same as the innermost layer of the laminate or may be distinct therefrom. Furthermore, although the invention is directed to butt-jointed constructions, packages constructed with overlap joined sidewalls may also benefit from the disclosed detection layer, allowing them to be separated during recycling as described further below.

With the exception of the outermost detection layer, the paperboard laminate may be of the type conventionally used for such packages. The above mentioned Cekacan™ range comprises a heat-sealable polyolefin layer as the innermost layer, with an aluminium barrier layer and a paperboard layer at the outside. The paperboard layer may be provided with appropriate printing and may have a varnish or gloss layer as desired. In preferred embodiments, the laminate may have a thickness of between 500 micron and 1 mm, preferably between 600 micron and 800 micron.

The paperboard layer may have a weight of between 300g/m2 and 500g/m2, preferably around 400 g/m2.

In an alternative embodiment and in order to improve recycling, the sidewall may be aluminium-free as defined above. In this case another form of barrier layer or layers may be provided within the laminate. Various possible layers may be contemplated, including ethylene vinyl alcohol (EVOH) and similar polymeric oxygen barriers, with or without scavengers. Alternatively, inorganic oxide layers may be used such as silicon oxide and aluminium oxide.

The base may be provided in different forms according to the intended construction. In a presently preferred embodiment the base also comprises a paperboard laminate having at least an innermost layer of heat-sealable polymer, an oxygen barrier layer and a core layer of paperboard. This allows the joint to the lower end of the sidewall to be created in a conventional manner, wherein a peripheral edge of the base is folded downwards and the innermost layer of the peripheral edge is adhered to the innermost layer of the sidewall in a face-to-face connection. The base is preferably recessed upwards with respect to the lower end of the sidewall, creating a cavity beneath the base that can be used for stacking. Such stacking is generally conventional and the upper surface of the closure may be provided with stacking arrangements that are complementary to the base. The stacking arrangements may be present on the rim or on the lid, depending on the form of the closure.

In an embodiment, the lower end of the sidewall is folded over inwards to partially cover the base. In this context, folded is intended to include both a tight fold and also a rolled edge. The rolled or folded lower end of the sidewall provides a more stable base on which the package may stand and can also facilitate stacking. It will be understood that such a rolled or folded construction may benefit from the use of a butt-joint to form the sidewall, since an overlap joint may be more difficult to fold.

In many cases, a detection layer on the sidewall may suffice for identification of the package within a recycling stream. In some cases however, it may be desirable that the base also comprises an outermost detection layer. This may further increase the accuracy of identification and separation. In an embodiment, the detection layer on the base also comprises a polyolefin and may also comprise a heat-sealable material. The base may be formed of the same laminate as the sidewall.

In the case that the outermost layer of the base is heat-sealable, the lower end of the sidewall may be folded over the peripheral edge of the base and can be adhered completely to the outermost detection layer of the peripheral edge such that no free end remains. Such a construction can be much more tightly folded than one in which no adhesion is applied to the rolled or folded lower end of the sidewall. The resulting seam has a double seal, namely a face-to-face seal between the inner layers of the base and sidewall and an overlap seal where the folded lower end of the sidewall overlaps the peripheral edge of the base and adheres to its outermost detection layer. For use in the context of infant formula, such a tight seam has considerable advantages in terms of tamper evidence. Because there is no free end of the sidewall available that is not adhered against the peripheral edge of the base, prising open of the fold or the seal is precluded. Any attempt at

fraudulent access through the base of the container would be almost impossible without leaving evidence of such tampering.

The connection between the closure and the sidewall is less critical in terms of sealing or fraudulent access since it is the membrane seal that ensures hermetic closure prior to use. Nevertheless, after opening, the closure must ensure that the contents are protected and for this reason, the engagement between the closure and the sidewall must be secure and at least insect tight to 70 microns. In an embodiment, the rim has an inverted U-shaped channel engaging the upper end of the sidewall and adhesively connected thereto. In this way, adequate sealing of the container/closure interface may be achieved and/or maintained to provide a barrier to keep insects out of the container and away from the nutritional contents. In an embodiment, substantially the full interface of the sidewall and the circumferential rim of the closure is sealed using an adhesive. The adhesive is preferably applied as an uninterrupted region completely surrounding the upper end of the sidewall, such that sidewall and rim are fully sealed together and insects cannot pass through.

The container may be of any suitable shape as defined by the sidewall, which forms a tube having a given cross-sectional shape. In an embodiment, a cross-section of the sidewall, parallel to the base, has the shape of a rounded rectangle or rounded square. In other words, the sidewall can be in the form of a tube of quasi-rectangular cross section. The above-mentioned point of weakness may be arranged in a corner of the sidewall. The corner is an advantageous place to initiate a pulling force, since it is easier to separate a corner of the rim than a part located in the middle between the corners. Alternatively, the point of weakness may be located on one of the sides, e.g. centrally on one of the shorter sides of the rectangle. For display purposes, it is more advantageous that the container has the shape of a rounded rectangle as this provides more display surface to communicate with the consumer.

In an embodiment, a line of weakness is arranged in the rim of the closure, e.g. extending from the outer edge of the rim towards the access opening, and adapted to break open the rim, to facilitate separating the rim from the container. Preferably, the line of weakness is formed by a local thinning of the rim, by frangible connections and/or by a partial cut. The line of weakness may be combined with a pull-tab as described above, wherein the pull-tab is connected to the rim adjacent to the line of weakness. In this way, the pull-tab provides a good grip on the rim at the position of the line of weakness to initiate tearing at the line of weakness. In this case, the line of weakness may be located at a location on the rim having a minimum dimension. It will be understood that the rim should remain strong enough to not break during transportation.

In an embodiment, the line of weakness is arranged in the laminate material of the sidewall. In this case, the line of weakness may be formed by a partial cut of the laminate material, a line of partial perforations or a strip enclosed in the laminate material from which a grip tab visibly protrudes.

In an embodiment, the separation region comprises a tear band substantially surrounding the sidewall and/or the rim. The tear band may surround the sidewall and/or the rim completely or partially. If it surrounds the sidewall and/or the rim partially, the remaining part of the circumference may be sufficiently small such that the closure and the container can easily be manually separated

when the tear band has been removed. Preferably, the tear band surrounds the sidewall and/or the rim for at least 70% of the circumference, more preferably at least 85% of the circumference or surrounds it completely.

As has been indicated above, the fact that the separation region and the line of weakness are located above the seal assures that the sealing of the package cannot be compromised due to the line of weakness. Nevertheless, during use of the package after initial opening, it is important that the line of weakness does not compromise the ability to reseal the package.

The invention further relates to a method of recycling a package after emptying of the contents as defined in the claims. The method may comprise: separating the closure from the container; disposing of the closure with plastic waste; disposing of the container into a general waste stream; identifying the detection layer using near infrared (NIR) detection: and separating the container from the general waste stream into a paperboard laminate waste stream. The method may be carried out in any particular sequence and is not limited to the sequence of steps given above.

It will be understood that the separation of the closure from the container may take place in the home. To this end, the package may include a separation region e.g. comprising a point or line of weakness, whereby a consumer may separate the closure at the point or line of weakness. The package may also be provided with a tear strip having a tab and the closure may be separated by engaging the tab to remove the tear strip. The identification and separation of the container from the general waste stream may take place at a waste treatment facility.

Alternatively, the closure may be separated at a waste facility. The closure may even be separated after the step of identifying the detection layer whereby the container and closure are subsequently disposed into their respective waste streams. The detection layer may be specific to such packages whereby an action to remove and separate the closure may be initiated once detection of the detection layer identifies the package as being of the type having a removable closure.

The invention also relates to a method of manufacturing a package as defined in the claims. The method may comprise providing a sheet of paperboard laminate material having opposed edges. The laminate may be as discussed above and hereinafter, comprising at least an innermost layer of heat-sealable polymer, an oxygen barrier layer, a core layer of paperboard and an outermost detection layer. The method may further comprise rolling or curving the sheet about an axis that is parallel to the opposed edges and joining the edges together in abutting relation to form a tubular sidewall having an upper end and a lower end. In this context, parallel is understood to be 'generally parallel' and containers that are slightly conical would also fall within the scope of the invention. Thereafter, a base is provided and inserted into the tubular sidewall and a peripheral edge of the base is sealed to the sidewall adjacent to the lower end to form a product containing space. The product containing space may subsequently be filled with a quantity of powdered nutritional product including removing air from the product containing space and replacing it with a volume of inert gas. Once filled, a membrane seal may be applied above the product to seal the product and the inert gas within the product containing space. As a final step a closure is applied to

the upper end of the sidewall. The closure may be of the type made of plastic material and including a circumferential rim connected to the peripheral edge and defining an access opening and a lid, pivotably attached to the rim for selectively closing the access opening.

In an embodiment, the opposed edges are joined together by a tape, heat sealed to the innermost layer of heat-sealable polymer.

In a further embodiment, the base may comprise a laminate having an innermost heat-sealable polymer layer and the base is sealed to the sidewall by folding a peripheral edge of the base downwards and heat-sealing the innermost layer of the peripheral edge to the innermost layer of the sidewall. An outermost layer of the base may further comprise a heat sealable polymer and the lower end of the sidewall may be folded over inwards to at least partially cover the peripheral edge of the base and heat-sealed to the outermost layer thereof.

BRIEF DESCRIPTION OF THE DRAWINGS

The features and advantages of the invention will be further appreciated upon reference to the following drawings of a number of exemplary embodiments, in which:

Figure 1 shows a perspective view of a package according to the invention;

Figure 2 shows a vertical cross-section through the package of Figure 1 in the direction II-II;

Figure 2A shows a detail of the seam in Figure 2; and

Figure 3 shows a vertical cross section through the package of Figure 1 in the direction III-III.

DESCRIPTION OF ILLUSTRATIVE EMBODIMENTS

Figure 1 shows a first embodiment of a package 1 for powdered infant nutrition according to the present invention, comprising a closure 2 and a container 3. The package 1 substantially corresponds to the commercially available Easypack package in which Nutrilon™ infant formula is marketed by Groupe Danone.

The container 3 comprises a base 38 and a sidewall 36 extending from a lower end 30 to an upper end 31. The sidewall 36 is in the form of a quasi-rectangular tube i.e. a rectangular cross-section tube with bowed sides and rounded corners. A vertical seam 40 extends up the sidewall 36. Inside the container 3, there is provided a membrane seal 4 which separates the content of the container 3, in this case infant milk formula, from the outside. Also visible is a point of weakness 32 at one corner of the sidewall 36 below the closure 2, delimited by a line of weakness 37.

The closure 2 is a one-piece injection-moulded component, comprising a circumferential rim 20, a hinge 10 and a lid 21 and is shown with opened lid 21. Lid 21 is thus pivotably connected to rim 20. The rim 20 defines an access opening 27. In this embodiment, a first flange 11 bounds the access opening 27. Lid 21 is provided with a lid flange 12 which fits on the first flange 11 to close off access opening 27 and to hermetically seal the package 1. In this embodiment, the access opening 27 is almost elliptic. The access opening 27 can also be round or even rectangular with rounded corners. For good sealing, the lid flange 12 fits closely around the flange 11 to hermetically seal the access opening 27.

The hinge 10 has a connection part connecting to the lower end of lid flange 12. Thus, the entire lid 21 can remain accessible for engaging it for opening lid 21. Furthermore lid 21 is provided with a lip 13 for opening the lid 21. In this embodiment, the lip 13 is also provided at the lower end of lid flange 12. Here, it is provided opposite the hinge 10. Thus, a user can engage the lip 13 to open lid 21 easily. The lip 13 further provides an end rim which can be covered or shielded with a tamper evident band 14. The connection of the hinge 10 and lip 13 to the lower end of the lid flange 12 ensures that these portions lie flush with the rim 20 and do not interfere with the stacking function discussed below.

Rim 20 further comprises a top wall 15 which is provided with said access opening 27. On the top wall 15, cam elements 16 are provided. The use of such cams 16 is further explained in WO2007/142522 of the current applicant. These cams 16 provide part of stacking means for closures 2 in production. Furthermore, these cams 16 provide part of stacking means for stacking complete packages 1 for instance in stores, whereby a base 38 of a first package stacks on the rim 20 of an underlying package.

In this embodiment, the cams 16 are provided on the rim 20. An advantage of this is that the lid 21 is not loaded by the supported packages and the quality of closure is not compromised. The height of the lid 21 in closed position is equal or substantially equal to the height of the cams 16. Thus, when packages are stacked, the load of the containers will keep the lids pressed closed, while preventing loads from other directions.

It was already discussed that hinge 10 has a connection part connecting to the lower end of lid flange 12. In fact, in order to improve stacking, the connection part of hinge 10 connects below the circumferential lower end of lid flange 12 and a lowered part 17 is provided in top wall 15.

Figure 2 shows a horizontal cross-section through the package of Figure 1, taken in the direction II-II. In this view, the quasi-rectangular cross-sectional shape of the sidewall 36 can be seen. On the inner side of the container 3, covering the vertical seam 40 there is a tape 42.

Figure 2A shows a detail of the sidewall 36 at the vertical seam 40, where opposed edges 39A, B of the sidewall are brought together in abutting relation. The sidewall 36 is made of a laminate comprising a number of layers. The thickest layer is a core layer 44 of paperboard. To the inside of the core layer 44 is a barrier layer 46 of aluminium and an innermost heat-seal layer 48 of polyethylene (LDPE). Outside the core layer 44 is an outermost detection layer 50, also of polyethylene. It will be understood that other layers or sub-layers such as tie layers, adhesive layers and printing and varnish layers may be present. The thickness of the sidewall 36 is about 700 microns and has a weight of between 250 g/m² and 500 g/m². The tape 42 covers the vertical seam 40 and keeps the opposed edges 39 A, B together. The tape 42 is generally conventional and comprises a laminate of OPET and aluminium with heat sealable LDPE on both surfaces. In the case that the sidewall is formed of an aluminium-free laminate, the tape 42 may also be provided with an alternative aluminium-free barrier layer.

Figure 3 shows a vertical cross-section through the package of Figure 1, taken in the direction III-III through a corner of the package. In this view, the construction of the rim 20 and the base 38 and their connection to the sidewall 36 can better be seen.

The rim 20 rim has an inverted U-shaped channel 60 that closely fits over the upper end 31 of the sidewall 36. The rim 20 and sidewall 36 are glued together using an adhesive 62 provided in the channel 60. The point of weakness 32 in the sidewall 36 is defined by the portion of the sidewall 36 above the line of weakness 37. This line of weakness 37 is a partial perforation through the sidewall 36. As can be seen in this view, the line of weakness 37 is provided in what may be referred to as the headspace of the container 3 between the membrane seal 4 and the upper end 31.

The point of weakness 32 also provides a gripping region by which a user can grip beneath the closure 2 in order to break the tight connection between the closure 2 and the container 3. The point of weakness 32 is provided in a corner of the sidewall 36 just below the rim 20, such that it can conveniently be pressed inwards to allow placement of a thumb. Subsequently, the closure 2 can be torn from the container 3 in order to allow separated recycling after use.

The base 38 of the container 3 is also made of the same laminate as the sidewall 36. It has a peripheral edge 64 that is folded downwards and that is heat sealed in a face-to-face seal to the innermost layer of the sidewall 36 adjacent to the lowed end 30. The lower end 30 is folded inwards over the peripheral edge 64 of the base 38 and sealed to the outermost layer thereof in an overlap seal. Since the entire surface area of the inwardly folded lower end 30 is sealed to the outermost layer of the base 38, no free end is visible at which unauthorised tampering could take place. In particular, the lower end 30 of the sidewall 36 faces towards the base 38 preventing insertion of a sharp object. The resulting seam is both sturdy and secure against tampering. The base 38 is recessed upwards with respect to the lower end 30 of the sidewall 36, creating a cavity 66 beneath the base 38. The cavity 66 is sized to fit over the cams 16 on the closure 2, allowing stable stacking of packages 1.

The illustrated package 1 is designed to contain 800 grams of powdered infant formula. It will be understood that such packages may alternatively contain between 100 and 2000 grams, preferably between 300 and 1200 grams, most preferably either about 450 grams or about 900 grams.

The sidewall 36 of the container 3 is provided with information leading the user to use the point of weakness 32 properly for separation of the closure 2 and the container 3 and providing additional information relating to correct recycling.

The invention has been described by reference to certain embodiments discussed above. It will be recognized that these embodiments are susceptible to various modifications and alternative forms well known to those of skill in the art. In particular, both the hinges and the container may be distinct from the schematically illustrated design.

Many modifications in addition to those described above may be made to the structures and techniques described herein without departing from the spirit and scope of the invention. Accordingly, although specific embodiments have been described, these are examples only and are not limiting upon the scope of the invention.

CLAIMS

1. A package for a powdered nutritional product comprising:

a sidewall of tubular shape, having an upper end and a lower end, the sidewall comprising a sheet of paperboard laminate with opposed edges brought together and butt-jointed at a vertical seam, wherein the laminate comprises at least an innermost layer of heat-sealable polymer, an oxygen barrier layer and a core layer of paperboard, the sidewall further comprising an outermost detection layer;

a base, joined to and closing the lower end of the sidewall to define a product containing space;

a quantity of the powdered nutritional product located in the product containing space;

a membrane seal, for closing the product containing space prior to use and being at least partially removable to gain access to the product; and

a closure, made of plastic material, including a circumferential rim connected to the upper end of the sidewall and defining an access opening and a lid, pivotably attached to the rim, for selectively closing the access opening.

2. The package according to claim 1, comprising a separation region for facilitating the separation of the closure from the sidewall after use, the separation region comprising a point or line of weakness where separation can be initiated or facilitated by a user.

3. The package according to claim 1 or claim 2, wherein the membrane seal is attached to the sidewall below the closure, adjacent to the upper end.

4. The package according to any one of the preceding claims, wherein the detection layer comprises a heat-sealable polymer material, preferably polyethylene and more particularly LDPE.

5. The package according to any one of the preceding claims, wherein the detection layer has a thickness of between 5 microns and 50 microns, alternatively between 10 microns and 25 microns and preferably around 15 microns.

6. The package according to any one of the preceding claims, wherein the base comprises a paperboard laminate comprising at least an innermost layer of heat-sealable polymer, an oxygen barrier layer and a core layer of paperboard.

7. The package according to claim 6, wherein a peripheral edge of the base is folded downwards and the innermost layer of the peripheral edge is adhered to the innermost layer of the sidewall.

8. The package according to claim 7, wherein the lower end of the sidewall is folded over inwards to partially cover the base.

9. The package according to claim 8, wherein the base also comprises an outermost detection layer and/or sealing layer.

10. The package according to claim 9, wherein the lower end of the sidewall is sealed to the outermost layer of the peripheral edge in an overlap seal.

11. The package according to any one of the preceding claims, wherein the rim has an inverted U-shaped channel engaging the upper end of the sidewall and adhesively connected thereto.

12. The package according to any one of the preceding claims, wherein the sidewall and/or the membrane seal is aluminium-free and/or the barrier layer comprises a polymeric layer or an oxide layer.

13. A method of recycling a package, after emptying of the contents, the package comprising a container of paperboard laminate material and a plastic closure, the laminate material comprising at least an innermost layer of heat-sealable polymer, an oxygen barrier layer and a core layer of paperboard, the sidewall further comprising an outermost detection layer the method comprising:

separating the closure from the container;

disposing of the closure with plastic waste;

disposing of the container into a general waste stream;

identifying the detection layer using near infrared (NIR) detection: and

separating the container from the general waste stream into a paperboard laminate waste stream.

14. The method according to claim 13, wherein the package comprises a separation region comprising a point or line of weakness and the closure is separated at the point or line of weakness.

15. The method according to claim 13 or claim 14, wherein the package is provided with a tear strip having a tab and the closure is separated by engaging the tab to remove the tear strip.

16. The method of any one of clams 13 to 15, wherein the package is a package according to any of claims 1 to 11.

17. A method of manufacturing a package, comprising

providing a sheet of paperboard laminate material having opposed edges, wherein the laminate comprises at least an innermost layer of heat-sealable polymer, an oxygen barrier layer and a core layer of paperboard, the sidewall further comprising an outermost detection layer;

rolling the sheet about an axis that is parallel to the opposed edges and joining the edges together in abutting relation to form a tubular sidewall having an upper end and a lower end;

providing a base and inserting the base into the tubular sidewall;

sealing a peripheral edge of the base to the sidewall adjacent to the lower end to form a product containing space;

filling the product containing space with a quantity of powdered nutritional product;

removing air from the product containing space and replacing it with a volume of inert gas;

applying a membrane seal above the product to seal the product and the inert gas within the product containing space; and

applying a closure to the upper end of the sidewall, the closure including a circumferential rim connected to the peripheral edge and defining an access opening and a lid, pivotably attached to the rim for selectively closing the access opening.

18. The method according to claim 17, wherein the opposed edges are joined together by a tape, heat sealed to the innermost layer of heat-sealable polymer.

19. The method according to claim 17 or claim 18, wherein the base comprises a laminate having an innermost heat-sealable polymer layer and the base is sealed to the sidewall by folding a peripheral edge of the base downwards and heat-sealing the innermost layer of the peripheral edge to the innermost layer of the sidewall.

20. The method according to claim 19, wherein an outermost layer of the base comprises a heat sealable polymer and the lower end of the sidewall is folded over inwards to at least partially cover the peripheral edge of the base and heat-sealed to the outermost layer thereof.

21. The package of any of claims 1 to 12 or the method according to any of claims 13 to 20, wherein the powdered nutritional product is infant formula.

Fig. 1

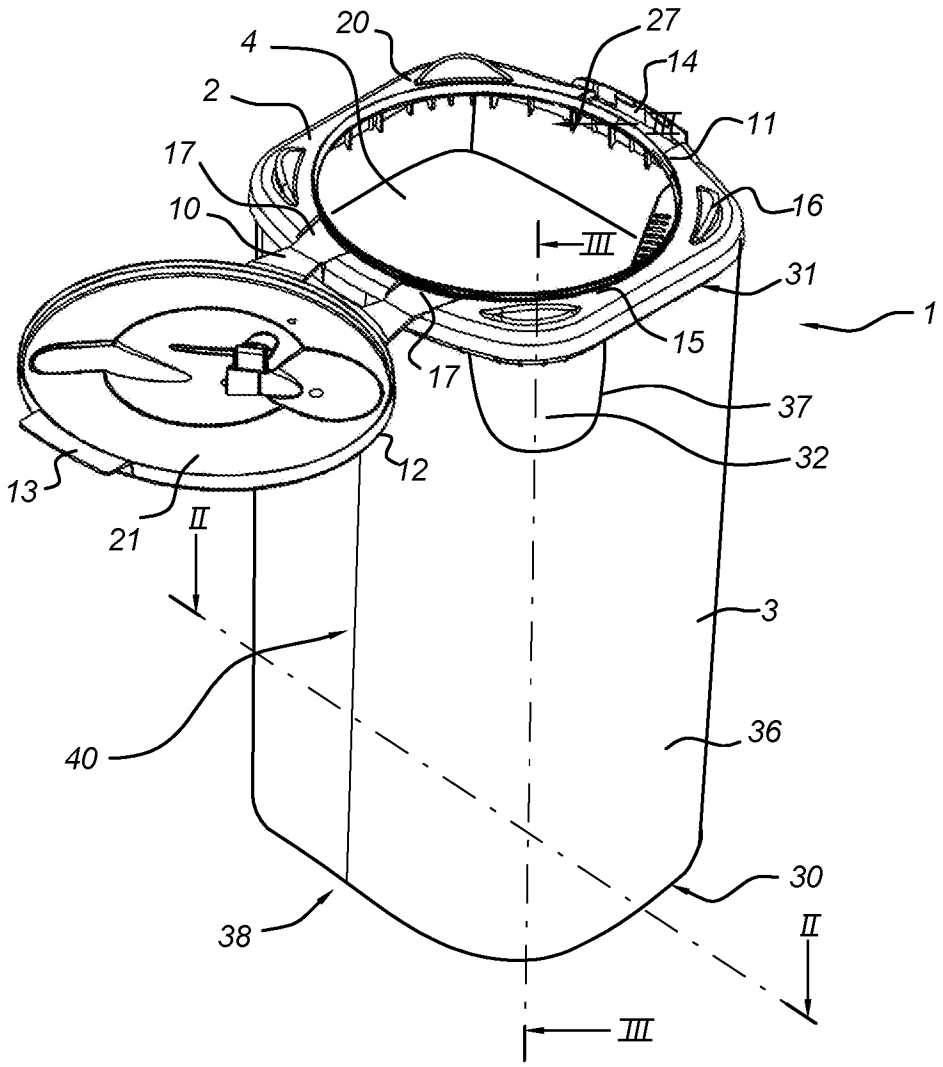
20
27
4
14
2
11
17
16
10
III
31
1
15
17
37
32
12
13
21
II
3
40
36
30
38
II
III

Fig. 2

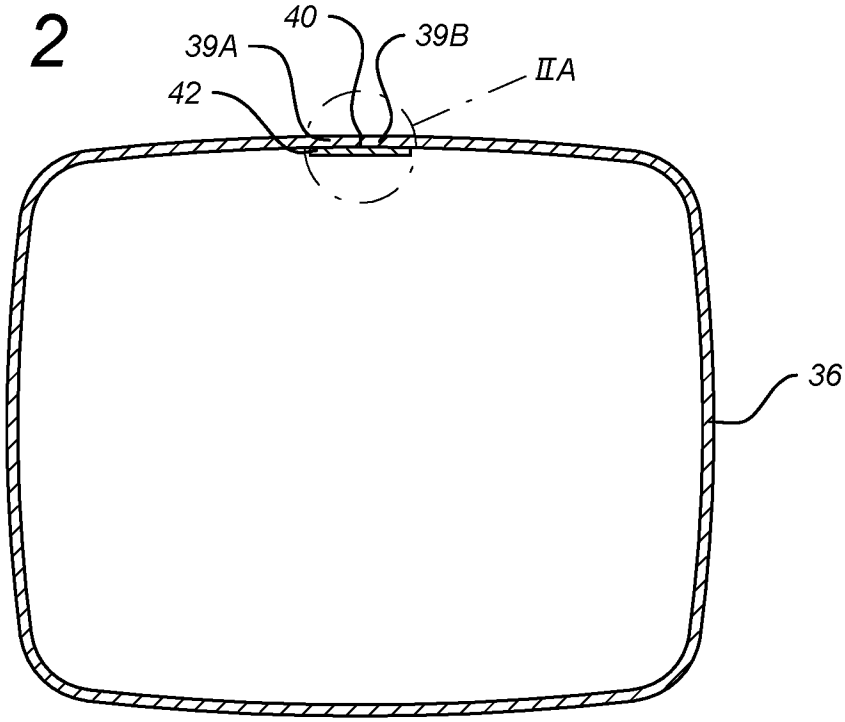

Fig. 2A

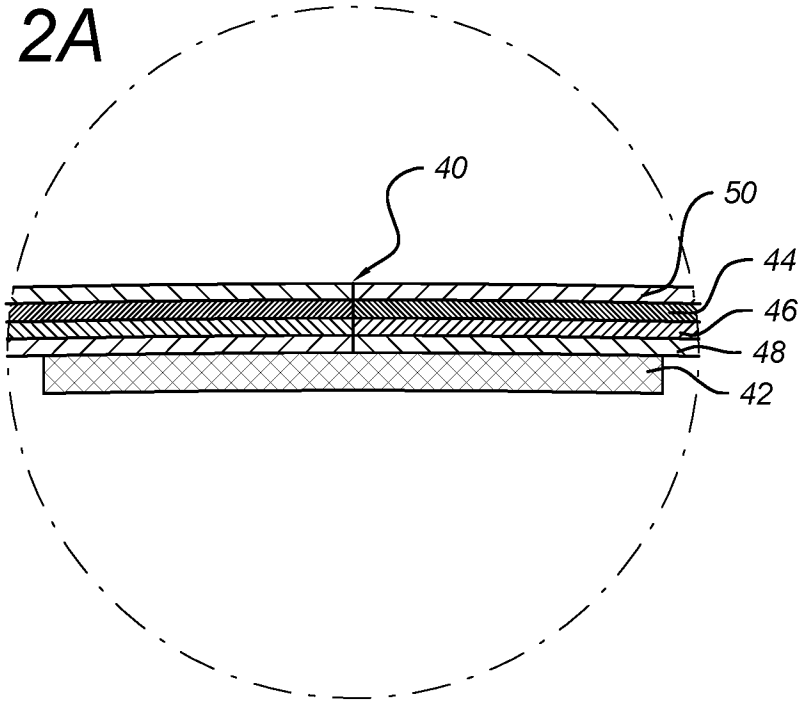

Fig. 3

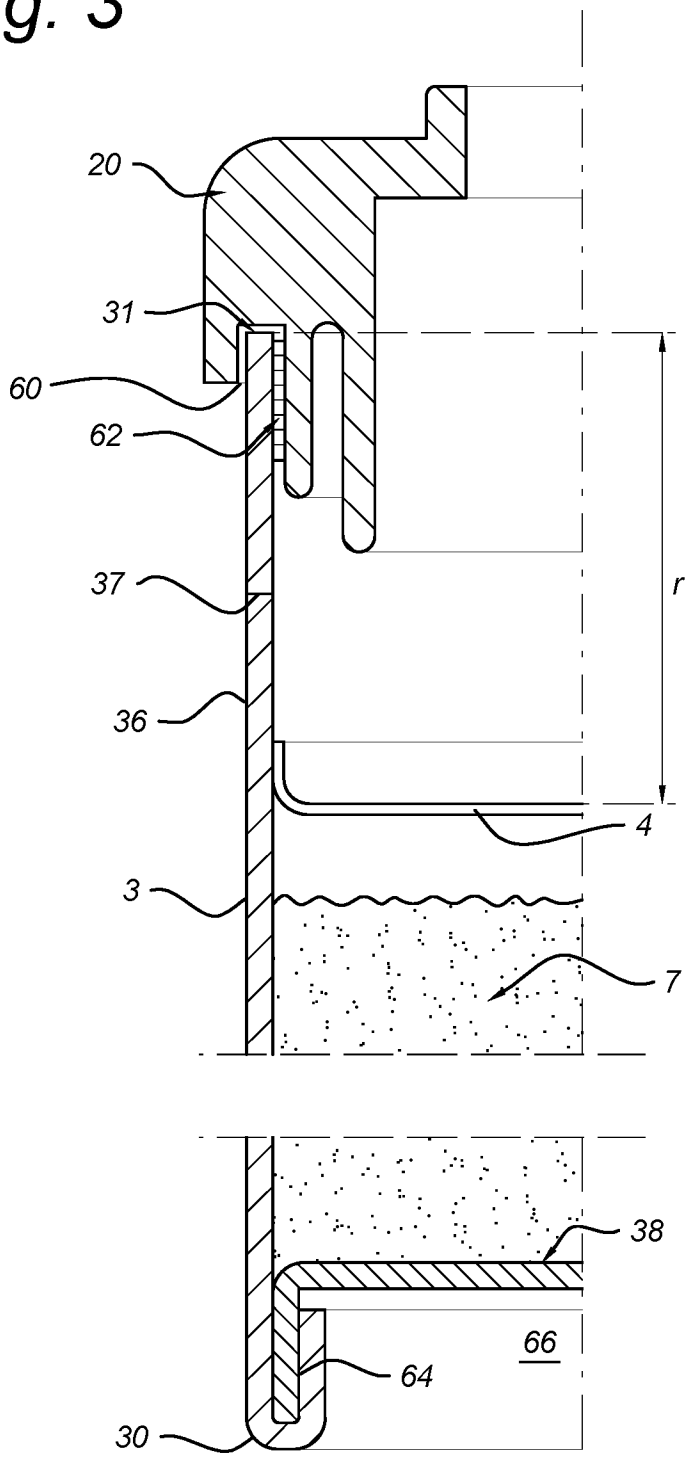

INTERNATIONAL SEARCH REPORT

International application No
PCT/NL2018/050696

A. CLASSIFICATION OF SUBJECT MATTER
INV. B65D3/10 B65D3/14 B65D3/22 B65D3/26 B65D3/28
B65D51/18 B65D43/16 B65D21/02
ADD.
According to International Patent Classification (IPC) or to both national classification and IPC

B. FIELDS SEARCHED

Minimum documentation searched (classification system followed by classification symbols)
B65D B29B

Documentation searched other than minimum documentation to the extent that such documents are included in the fields searched

Electronic data base consulted during the international search (name of data base and, where practicable, search terms used)
EPO-Internal, WPI Data

C. DOCUMENTS CONSIDERED TO BE RELEVANT

Category*	Citation of document, with indication, where appropriate, of the relevant passages	Relevant to claim No.
X	US 4 736 870 A (CHRISTENSSON LARS [SE]) 12 April 1988 (1988-04-12)	1,3-7, 11,12, 17-19,21
Y	column 1, line 54	8-10,20
A	column 6, line 40 - line 41; figure 7 column 3, line 54 - line 55 column 3, line 59 - line 60 column 6, line 48 - line 49 column 6, line 55 - line 58 column 6, last line column 7, line 33 - line 42	2

A	US 6 544 613 B1 (VARADARAJAN KRISHNARAJU [US]) 8 April 2003 (2003-04-08) column 3, line 48 - line 50; figure 2 column 5, line 14 - line 15 column 5, line 55 - line 57 column 9, line 23 - line 25	1-12, 17-21

	-/--	

[X] Further documents are listed in the continuation of Box C.

[X] See patent family annex.

* Special categories of cited documents :

"A" document defining the general state of the art which is not considered to be of particular relevance

"E" earlier application or patent but published on or after the international filing date

"L" document which may throw doubts on priority claim(s) or which is cited to establish the publication date of another citation or other special reason (as specified)

"O" document referring to an oral disclosure, use, exhibition or other means

"P" document published prior to the international filing date but later than the priority date claimed

"T" later document published after the international filing date or priority date and not in conflict with the application but cited to understand the principle or theory underlying the invention

"X" document of particular relevance; the claimed invention cannot be considered novel or cannot be considered to involve an inventive step when the document is taken alone

"Y" document of particular relevance; the claimed invention cannot be considered to involve an inventive step when the document is combined with one or more other such documents, such combination being obvious to a person skilled in the art

"&" document member of the same patent family

Date of the actual completion of the international search	Date of mailing of the international search report
11 July 2019	19/09/2019

Name and mailing address of the ISA/	Authorized officer
European Patent Office, P.B. 5818 Patentlaan 2 NL - 2280 HV Rijswijk Tel. (+31-70) 340-2040, Fax: (+31-70) 340-3016	Sundell, Olli

1

Form PCT/ISA/210 (second sheet) (April 2005)

INTERNATIONAL SEARCH REPORT

International application No
PCT/NL2018/050696

C(Continuation). DOCUMENTS CONSIDERED TO BE RELEVANT

Category*	Citation of document, with indication, where appropriate, of the relevant passages	Relevant to claim No.
Y	US 5 476 213 A (SUSKI WILLIAM C [US]) 19 December 1995 (1995-12-19) column 4, line 4 - line 11; figures 1-3	8-10
Y	US 2014/366490 A1 (SAITO TAKESHI [JP] ET AL) 18 December 2014 (2014-12-18)	20
A	paragraphs [0069], [0107], [0136]; figures 19,21	12
A	US 5 025 981 A (SCHELLENBERG WALTER [CH]) 25 June 1991 (1991-06-25) figures 1,2	2

1

INTERNATIONAL SEARCH REPORT

International application No.
PCT/NL2018/050696

Box No. II Observations where certain claims were found unsearchable (Continuation of item 2 of first sheet)

This international search report has not been established in respect of certain claims under Article 17(2)(a) for the following reasons:

1. ☐ Claims Nos.:
because they relate to subject matter not required to be searched by this Authority, namely:

2. ☐ Claims Nos.:
because they relate to parts of the international application that do not comply with the prescribed requirements to such an extent that no meaningful international search can be carried out, specifically:

3. ☐ Claims Nos.:
because they are dependent claims and are not drafted in accordance with the second and third sentences of Rule 6.4(a).

Box No. III Observations where unity of invention is lacking (Continuation of item 3 of first sheet)

This International Searching Authority found multiple inventions in this international application, as follows:

see additional sheet

1. ☐ As all required additional search fees were timely paid by the applicant, this international search report covers all searchable claims.

2. ☐ As all searchable claims could be searched without effort justifying an additional fees, this Authority did not invite payment of additional fees.

3. ☐ As only some of the required additional search fees were timely paid by the applicant, this international search report covers only those claims for which fees were paid, specifically claims Nos.:

4. ☒ No required additional search fees were timely paid by the applicant. Consequently, this international search report is restricted to the invention first mentioned in the claims; it is covered by claims Nos.:

1-12, 17-20(completely); 21(partially)

Remark on Protest

☐ The additional search fees were accompanied by the applicant's protest and, where applicable, the payment of a protest fee.

☐ The additional search fees were accompanied by the applicant's protest but the applicable protest fee was not paid within the time limit specified in the invitation.

☐ No protest accompanied the payment of additional search fees.

INTERNATIONAL SEARCH REPORT

Information on patent family members

International application No
PCT/NL2018/050696

Patent document cited in search report	Publication date	Patent family member(s)	Publication date
US 4736870 A	12-04-1988	AT 70800 T	15-01-1992
		AU 7332087 A	10-12-1987
		BR 8702855 A	01-03-1988
		DE 3775476 D1	06-02-1992
		DE 3781903 D1	29-10-1992
		DE 3781903 T2	11-02-1993
		DK 276687 A	06-12-1987
		EP 0252039 A2	07-01-1988
		EP 0442433 A1	21-08-1991
		ES 2003826 A6	16-11-1988
		FI 872482 A	06-12-1987
		SU 1628850 A3	15-02-1991
		US 4736870 A	12-04-1988
US 6544613 B1	08-04-2003	CA 2324754 A1	08-05-2001
		DE 60003622 T2	15-04-2004
		EP 1104744 A2	06-06-2001
		MX PA00010932 A	25-04-2003
		US 6544613 B1	08-04-2003
US 5476213 A	19-12-1995	CA 2154499 A1	28-01-1996
		JP 2724294 B2	09-03-1998
		JP H0880935 A	26-03-1996
		US 5476213 A	19-12-1995
US 2014366490 A1	18-12-2014	AU 2012368754 A1	04-09-2014
		CA 2862590 A1	08-08-2013
		CN 104080716 A	01-10-2014
		EP 2810896 A1	10-12-2014
		KR 20140120349 A	13-10-2014
		MX 349490 B	01-08-2017
		PH 12014501709 A1	13-10-2014
		RU 2014135225 A	27-03-2016
		SG 11201404494W A	30-10-2014
		TW 201345804 A	16-11-2013
		US 2014366490 A1	18-12-2014
		WO 2013114516 A1	08-08-2013
		ZA 201406199 B	29-06-2016
US 5025981 A	25-06-1991	AT 94828 T	15-10-1993
		CA 2021035 A1	15-01-1991
		CH 678938 A5	29-11-1991
		DE 59002814 D1	28-10-1993
		DK 0408515 T3	07-02-1994
		EP 0408515 A1	16-01-1991
		ES 2045882 T3	16-01-1994
		JP 2509655 Y2	04-09-1996
		JP H0323014 U	11-03-1991
		US 5025981 A	25-06-1991

FURTHER INFORMATION CONTINUED FROM PCT/ISA/ 210

This International Searching Authority found multiple (groups of) inventions in this international application, as follows:

1. claims: 1-12, 17-20(completely); 21(partially)

   A package containing a powdered product, the package comprising a tubular sidewall with a butt-joint; a method of producing the same

   ---

2. claims: 13-16(completely); 21(partially)

   A method of recycling a package using near infrared detection

   ---