No. 679,749. Patented Aug. 6, 1901.

L. J. HIRT.

COKE OVEN.

(No Model.) (Application filed Mar. 12, 1901.)

2 Sheets—Sheet 1.

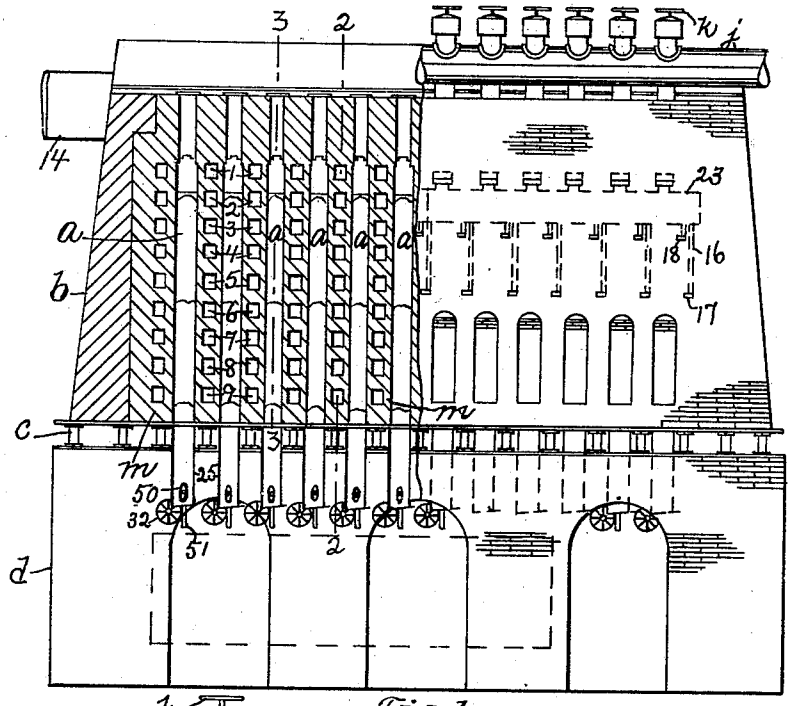

Fig. 1.

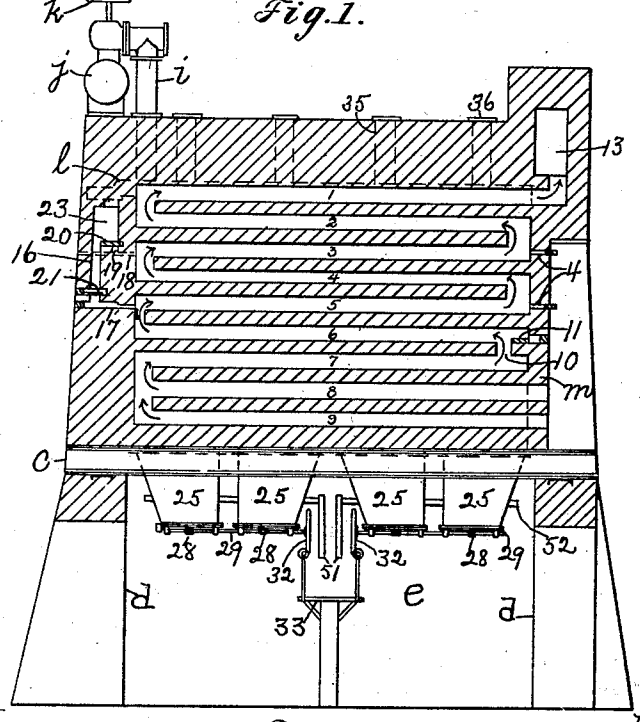

Fig. 2.

Witnesses.
C. H. Garnett
J. Murphy.

Inventor:
Louis J. Hirt
by Jas. H. Churchill
atty.

THE NORRIS PETERS CO., PHOTO-LITHO., WASHINGTON, D. C.

No. 679,749. Patented Aug. 6, 1901.

L. J. HIRT.

COKE OVEN.

(Application filed Mar. 12, 1901.)

(No Model.) 2 Sheets—Sheet 2.

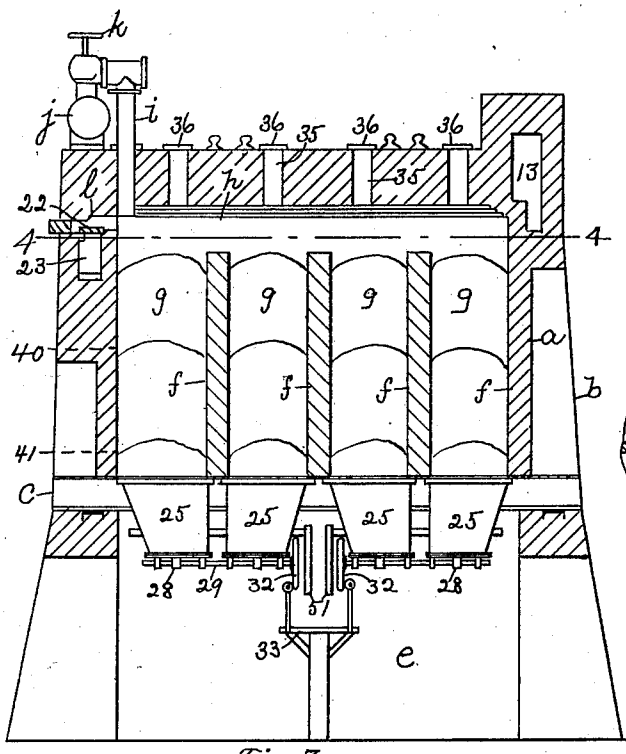

Fig. 3.

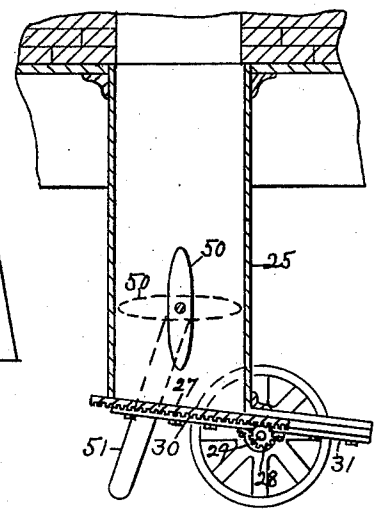

Fig. 5.

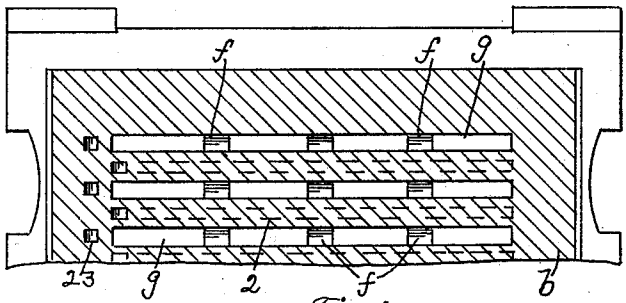

Fig. 4.

Witnesses.
C. K. Garnett
J. Murphy.

Inventor.
Louis J. Hirt
by Jas. H. Churchill
atty.

THE NORRIS PETERS CO., PHOTO-LITHO., WASHINGTON, D. C

UNITED STATES PATENT OFFICE.

LOUIS J. HIRT, OF BROOKLINE, MASSACHUSETTS.

COKE-OVEN.

SPECIFICATION forming part of Letters Patent No. 679,749, dated August 6, 1901.

Application filed March 12, 1901. Serial No. 50,773. (No model.)

To all whom it may concern:

Be it known that I, LOUIS J. HIRT, a citizen of the United States, residing in Brookline, in the county of Norfolk and State of Massachusetts, have invented an Improvement in Coking-Ovens, of which the following description, in connection with the accompanying drawings, is a specification, like letters and figures on the drawings representing like parts.

This invention relates to a novel construction of coking oven or apparatus with which coal or refuse coal from coal-washing plants, oil-shale, or other suitable material may be converted into coke at a minimum expense.

In accordance with this invention the coking apparatus is composed of a plurality of individual ovens arranged side by side to form a bank or series of ovens, and each is separated into a plurality of vertical chambers which communicate with a common outlet-passage extended longitudinally of the individual oven above said chambers. The side walls of the individual ovens are provided with a series of flues or passages which extend horizontally and are connected at their opposite ends to form a substantially long continuous passage composed of a plurality or series of superimposed sections, some of which communicate at one level with the atmosphere or with a source of cold air and others of which communicate at a higher level with suitable burners or gas-inlets. The lower portion of the chambers may extend below the level of the lowermost section of the continuous passage, if desired. The walls of the oven may be made of brick or other suitable material, and the structure thus formed may be supported upon girders or I-beams, which are supported at their ends upon foundation-walls, which form a space or chamber below the oven for a purpose, as will be described. The individual ovens may be provided with separate gas-outlets, one of which communicates with a suitable gas-main and the other of which communicates with the gas-inlets for the heating-flues, so that the poor gas driven off from the ovens may be utilized in heating the upper portion of the oven. The vertical chambers in each oven may be thus separated into three zones, which are heated to different temperatures and which may be designated as the "coking" zone, the "cooling" zone, and the "cold" zone. These and other features of this invention will be pointed out in the claim at the end of this specification.

Figure 1 is a side elevation and section of a coking apparatus embodying this invention; Fig. 2, a vertical section on the line 2 2, Fig. 1; Fig. 3, a vertical section on the line 3 3, Fig. 1; Fig. 4, a horizontal section on the line 4 4, Fig. 3; and Fig. 5, a sectional detail to be referred to.

In the present instance I have shown one form of apparatus embodying this invention.

The apparatus herein shown comprises a series of individual vertical ovens *a*, arranged side by side and having their walls forming part of a single structure *b*, which is supported upon metal girders or I-beams *c*, having their ends resting upon foundation-walls *d*, thus leaving an open space *e* below the coking-ovens.

The individual ovens *a* are preferably separated by vertical walls *f* into a plurality of chambers *g*, (see Fig. 3,) which communicate at their upper ends with a common passage *h*, extended across the tops of the chambers *g* and communicating with a gas-outlet pipe or passage *i*, which is connected to a gas-main *j*, the communication between said pipe and gas-main being controlled by a valve *k*. The passage *g* may and preferably will also be provided with a second outlet *l* for a purpose as will be described.

The side walls *m* of the individual ovens are provided with a series of superimposed flues extended substantially the width of the ovens *a* and connected at their opposite ends, as represented in Fig. 2, so as to form a continuous but irregular passage, the lowermost section or sections of said flues communicating with the atmosphere or with a suitable supply for cold or cool air and the upper sections communicating with a suitable supply for gas. In the present instance I have represented the side walls *m* as provided with nine superimposed flues and numbered 1 to 9, inclusive, and I have also represented the two lowermost flues 8 and 9 as extended through one end wall of the oven and communicating with the atmosphere. The cool air admitted into the lowermost flues 8 9

passes across the oven into the flue 7, which it traverses in the opposite direction and passes into the flue 6, through the port 10, which is adapted to be closed by a valve 11, operated from outside of the oven. The air traverses the flue 6 and enters the flue 5, where it meets a supply of gas, which becomes ignited, and the hot products of combustion traverse back and forth through the flues 5, 4, 3, 2, and 1 and pass into a gas-exit flue or passage 13, extended longitudinally of the apparatus and connected by a pipe 14 with a chimney. (Not shown.) The gaseous products admitted into the flue 5 may be taken from a separate gas-supply; but I prefer to take the gas from the coking-oven itself, and for this purpose the gas-outlet *l* is connected by a vertical passage 16 in the end wall of the oven with a horizontal passage 17, communicating with the flue 5, as shown in Fig. 2. I prefer also to admit gas from the passage 16 into the flue 3 through the horizontal passage 18, which is connected with the vertical passage 16 by the port or passage 19, with which may coöperate a valve 20, adapted to be operated from outside of the oven. The supply of gas to the flue 5 may be controlled by a similar valve 21. The vertical passage 16 may be closed by a valve 22, (see Fig. 3,) which is adapted to be operated from outside of the oven. The vertical passage 16 for each oven may be enlarged at its upper end and the enlarged portions connected or formed into a continuous flue 23, extended longitudinally of the ovens, as represented by dotted lines, Fig. 1.

The individual chambers *g* may and preferably will be provided with an extension 25, which projects below the brickwork of the structure *d* and into the space *e* between the foundation-walls. The extension 25 may be made of iron and provided with a movable bottom or door 27, (see Fig. 5,) which may be opened and closed by a pinion 28 on a shaft 29, engaging with a rack-bar 30, attached to the bottom or door 27. The movable bottom or door 27 is supported to move on suitable guides 31, and the shaft may be turned by a hand-wheel 32 or in any other suitable manner. The space *e* may have located in it a suitable platform 33, from which the operator may open the door or movable bottom 27.

The chambers *g* of each oven may be charged through suitable passages 35 in the top of the oven, which are provided with suitable covers 36.

From the above description it will be observed that the chambers *g* are practically separated into three parts or zones, the upper zone being in the present instance that part of the said chamber between the top of the oven and the line 40, Fig. 3, the middle zone between the lines 40 and 41, and the lower zone being the extension 25. The upper zone is subjected to extraneous heat, produced by the combustion of the gases passing through the flues 5 to 1, inclusive, and forms the coking zone in which the fresh charge of coal, which may be the refuse coal from coal-washing plants, oil-shale, or other suitable material, is subjected to distillation and converted into coke, which is hot or in a highly-heated condition. The middle zone is subjected to the cooling effect of air passing through the flues 9 to 6, inclusive, and forms the cooling zone, in which the hot coke is materially reduced in temperature by the cold air passing through the flues 9 to 6, inclusive, with a corresponding increase in the temperature of said air, so that when the said air passes into the flue 5 and meets the gases admitted therein it is in condition to effectively promote combustion. The third zone is also subjected to the cooling effect of the surrounding air, and the coke is still further reduced in temperature and brought to a substantially cold state, in which condition the said coke may be handled and used directly, without the necessity of quenching it with water, as now commonly practiced; or, if desired, the extension may be provided with a water-jacket, through which water may be circulated to remove any heat which may remain in the coke. When the coal or other material in the coking zone has been subjected to the extraneous heat for a sufficient length of time to properly coke the same, which may be determined by means of sight or peep holes 4, (see Fig. 2,) the door or bottom 27 is opened for a sufficient length of time to permit the cold or substantially cold coke in the cold zone to be discharged therefrom, after which the said door is closed. The coke in the cooling zone and that in the coking zone descends by gravity one step and leaves the coking zone empty, whereupon a fresh charge is fed into said zone through the feed-passages 35.

The extension 25 of each chamber may and preferably will be provided with a movable support 50, which is normally in a vertical position, (see Fig. 5,) so as not to obstruct the passage of the coke out from the extension, but which may be turned into a substantially horizontal position (indicated by dotted lines) at or about the time the cold coke has been discharged from the oven, thereby supporting the hotter coke until the operator has had an opportunity to close the door 27, whereupon the said support will be turned again into its vertical position and the hot coke allowed to move down to the bottom and rest upon the movable door. The support 50 may be operated by a crank or arm 51, mounted on the shaft 52 of said support outside of the extension 25.

The charge within the coking zone is subjected to extraneous heat produced by the combustion of gases supplied through the passages 17 18 from an outside source of supply until the richer volatile products have been distilled off, which products pass to the main *j* through the pipe *i*, the valve *k* being open and the valve 22 being closed to cut off the

passage 23 from the oven. The connections between the passages 17 18 and the outside source of supply are not herein shown, as they may be of any suitable construction. When the richer gases have been driven off, the valve *k* is closed and the valve 22 opened, and the poorer gases driven off from the partially-coked charge may be conducted into the heating-flues to furnish the heat necessary to complete the coking of the charge. When the poorer gases are used for heating the coking zone, as described, the auxiliary supply of gas may be cut off. It will be observed that the charge of fresh material is supported by the hot coke in the cooling zone, and this body is supported by the cold coke. Consequently when the discharge-door 27 is opened the temperature of the coking-zone is not reduced by cold air, as the entrance of air is prohibited by the bodies of cooling coke and hot coke. Furthermore, the interposition of the bodies of cold coke and cooling coke between the discharge door or valve and the cooling-chamber while the coking operation is going on obviates the necessity of luting or sealing said discharge-door. So, also, the use of pushers, levelers, loaders, and water for quenching are avoided, therefore materially reducing the cost of plant, maintenance, and operation of the same, and consequently enabling coke to be produced at a minimum expense.

I may prefer to construct the apparatus, as herein shown, with the cold zone below the cooling zone; but I do not desire to limit my invention in this respect, as the said zone might in some instances be located outside of the brick structure in front of the cooling zone, but in communication therewith.

I claim—

In a coking-oven, the combination with a vertically-arranged oven provided with vertically-arranged partition-walls separating the said oven into a series of chambers which communicate at their upper ends with a common passage extended across the tops of said chambers, a fuel-inlet for said chambers, and a coke-outlet for said chambers at their lower ends, substantially horizontal superimposed flues in the opposite side walls of said oven connected at their opposite ends to form a continuous passage, which communicates with the atmosphere at the lower end of said passage, a gas-inlet communicating with the said flues at an intermediate point and with the gas-outlet for said oven, and means to control the communication of said gas-inlet with said gas-outlet, substantially as described.

In testimony whereof I have signed my name to this specification in the presence of two subscribing witnesses.

LOUIS J. HIRT.

Witnesses:
JAS. H. CHURCHILL,
J. MURPHY.