Feb. 8, 1927. 1,616,605

E. D. CAMPBELL

GLASS CONTAINER BOX CAR

Filed Dec. 12, 1924 4 Sheets-Sheet 1

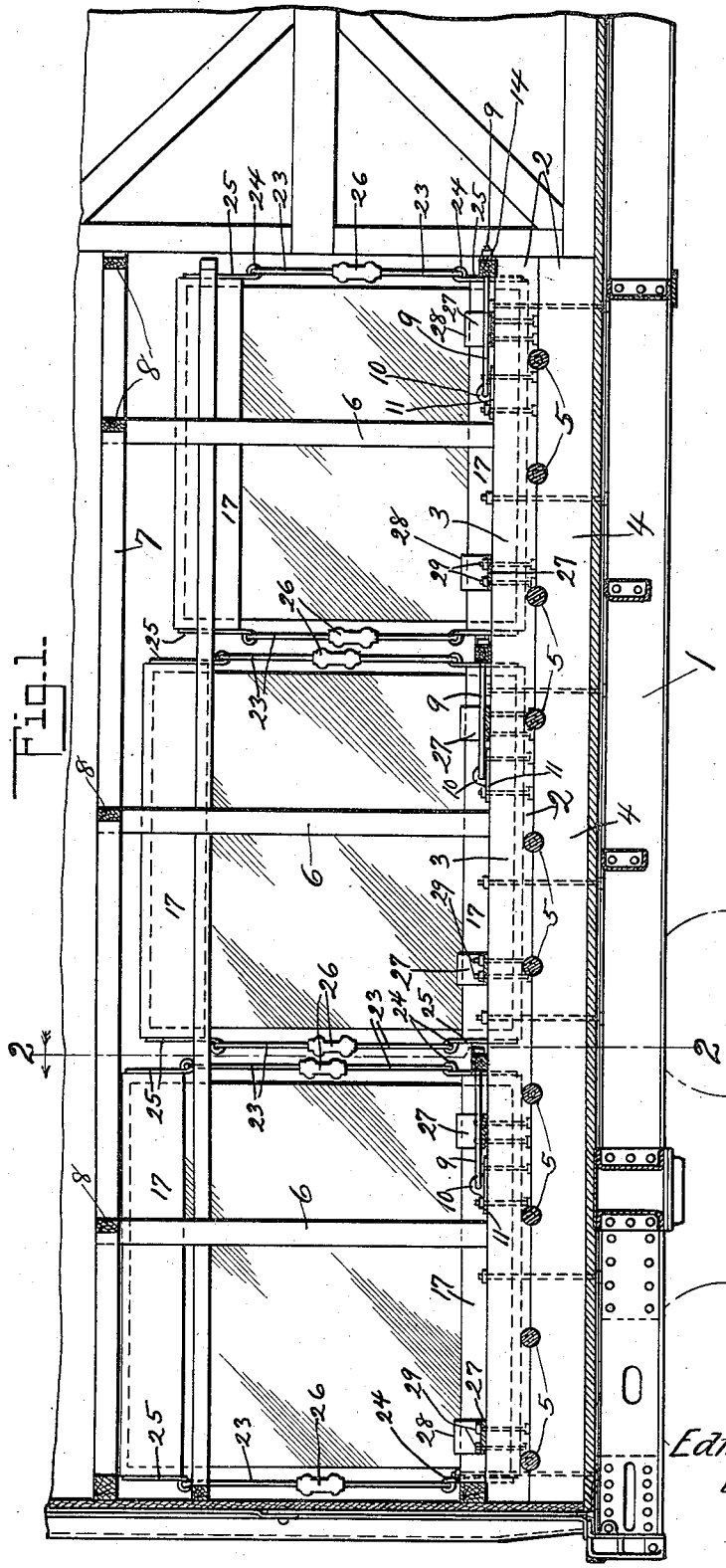

Fig. 1.

INVENTOR
Edmund D. Campbell
BY F. H. Gibbs
ATTORNEY

Feb. 8, 1927. 1,616,605

E. D. CAMPBELL

GLASS CONTAINER BOX CAR

Filed Dec. 12, 1924 4 Sheets-Sheet 2

Fig. 2.

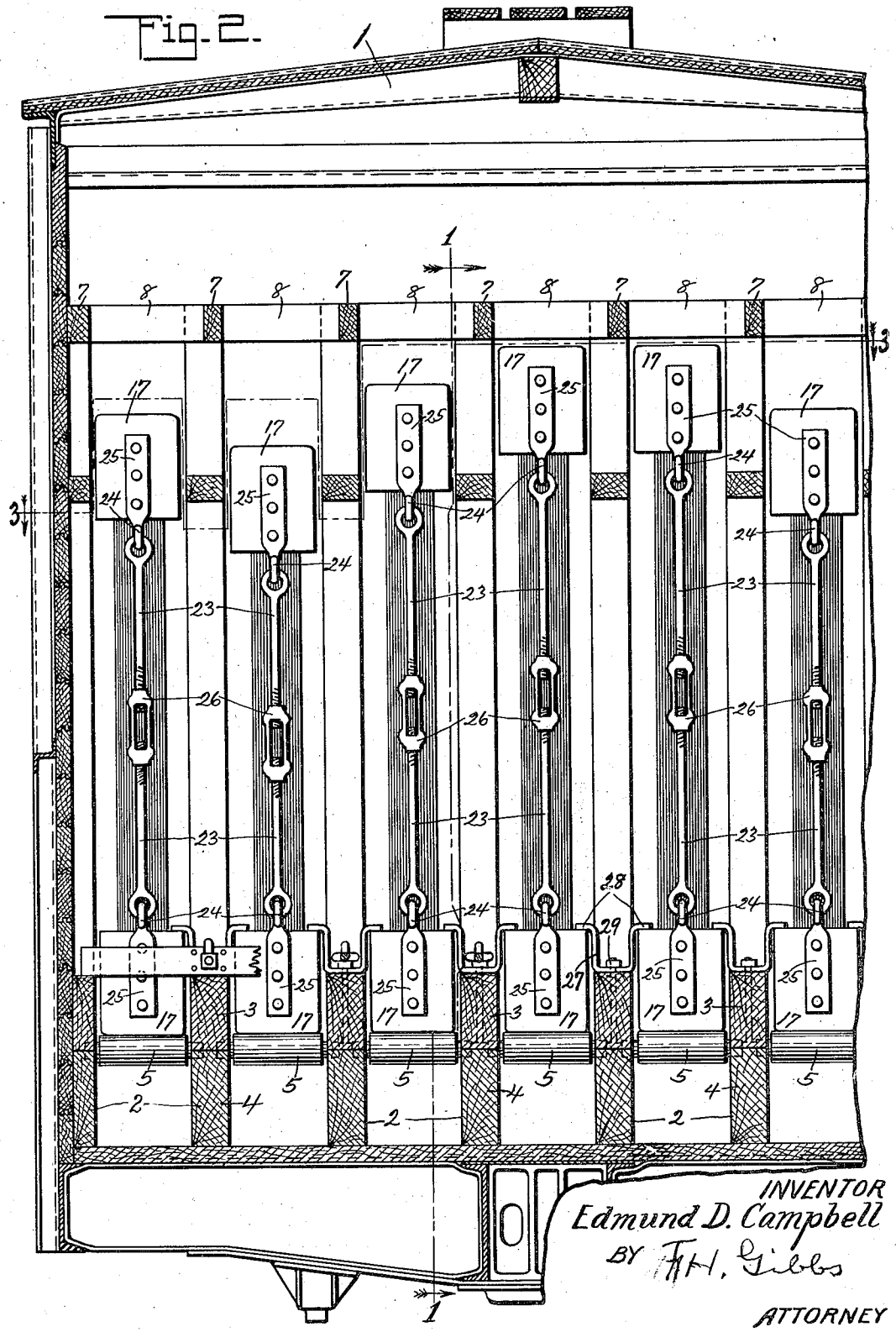

INVENTOR
Edmund D. Campbell
BY F. H. Gibbs
ATTORNEY

Feb. 8, 1927. 1,616,605

E. D. CAMPBELL

GLASS CONTAINER BOX CAR

Filed Dec. 12, 1924 4 Sheets-Sheet 3

Fig. 3.

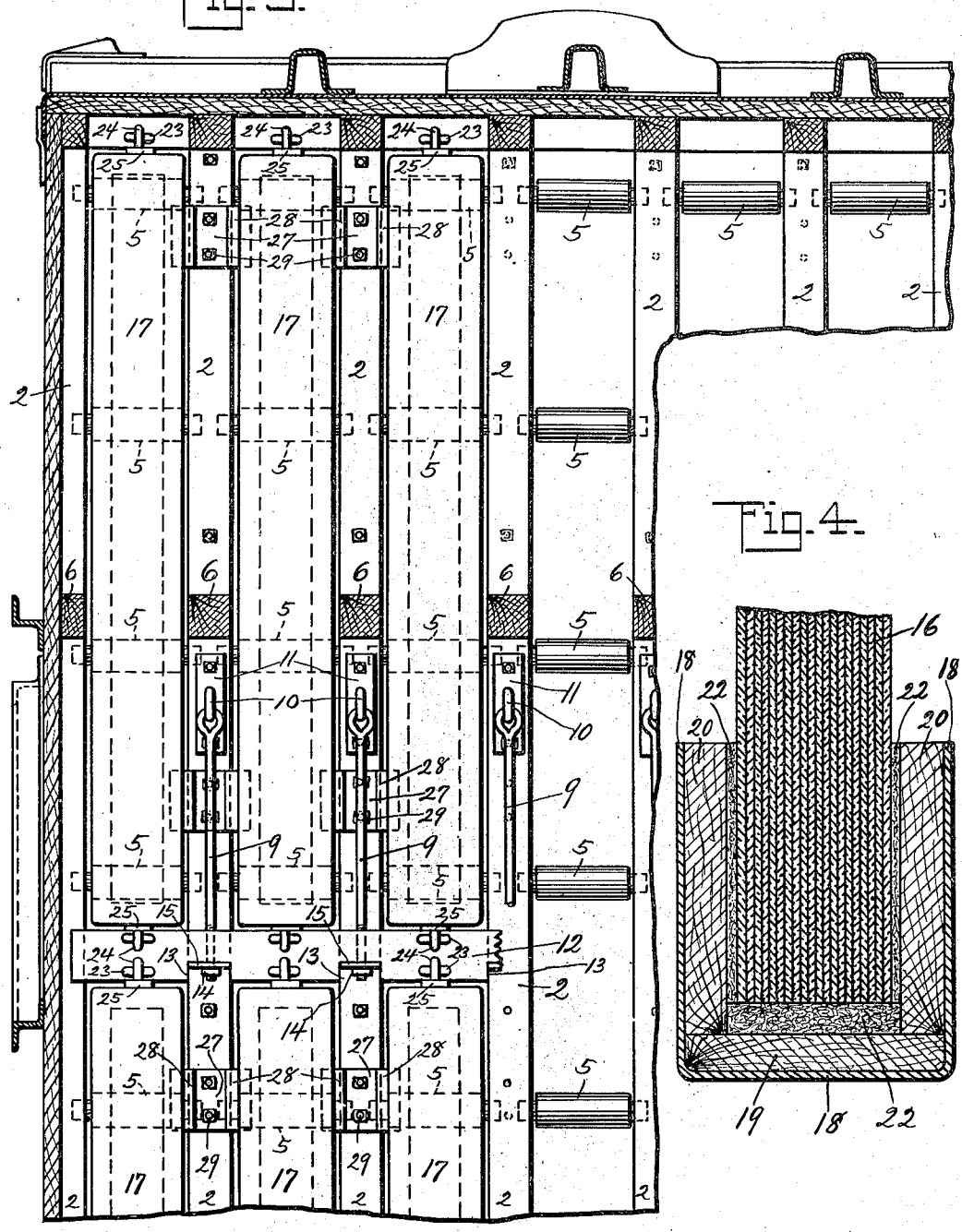

Fig. 4.

INVENTOR
Edmund D. Campbell
BY F. H. Gibbs
ATTORNEY

Feb. 8, 1927. 1,616,605

E. D. CAMPBELL

GLASS CONTAINER BOX CAR

Filed Dec. 12, 1924 4 Sheets-Sheet 4

Fig. 5.

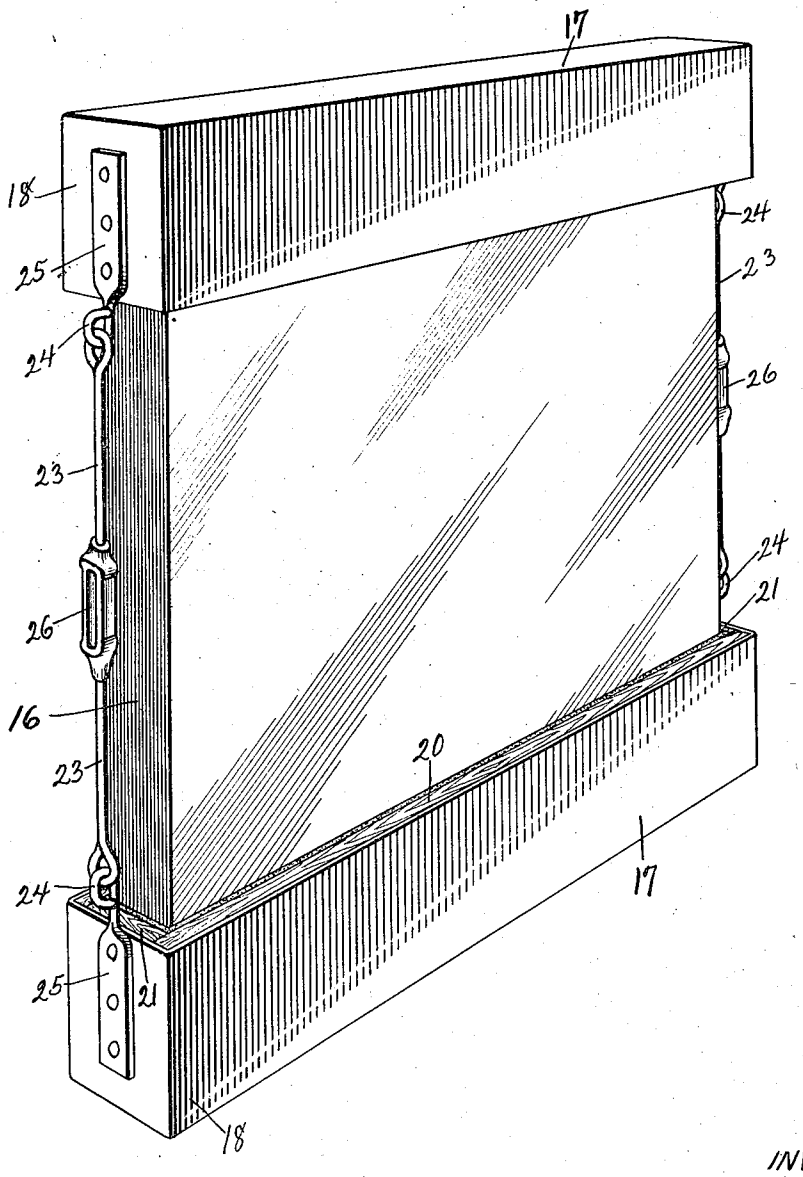

INVENTOR
Edmund D. Campbell
BY F. H. Gibbs
ATTORNEY

Patented Feb. 8, 1927. 1,616,605

UNITED STATES PATENT OFFICE.

EDMUND D. CAMPBELL, OF ST. LOUIS, MISSOURI, ASSIGNOR TO AMERICAN CAR AND FOUNDRY COMPANY, OF NEW YORK, N. Y., A CORPORATION OF NEW JERSEY.

GLASS-CONTAINER BOX CAR.

Application filed December 12, 1924. Serial No. 755,491.

In the drawings:

Fig. 1 is a longitudinal vertical sectional view taken through a box car along the line 1—1 of Fig. 2 and showing the improved glass containers mounted in a box car;

Fig. 2 is a transverse sectional view taken along line 2—2 of Fig. 1;

Fig. 3 is a fragmentary horizontal sectional view taken along the line 3—3 of Fig. 2;

Fig. 4 is an enlarged fragmentary sectional view taken through a lower protecting pocket and showing the manner in which the sheets of glass fit into the pocket, and

Fig. 5 is a perspective view showing sheets of glass protected by the improved pockets.

An object of this invention is to provide an improved construction whereby plate glass may be safely packed and shipped from one point to another in a freight car without danger of the glass becoming broken when the freight car is passing over rough roads or is suddenly brought to a stop or started with a jolt.

Another object of the invention is to so construct the rack which forms a portion of this invention that a number of packages of plate glass or other breakable substance may be placed in this rack and securely held against vertical or longitudinal movement in the rack.

Another object of the invention is to so construct the rack that the frames containing the glass may be easily slid longitudinally into or out of the rack and these frames of glass securely held in place by cross bars which extend in front of the frames and will be drawn into tight engagement with the frames.

Another object of the invention is to so construct the rack that it may be built into a box car of an ordinary construction and divided into a plurality of compartments extending longitudinally of the box car for receiving the glass containing frames.

Another object of the invention is to provide an improved type of frame for receiving a number of sheets of glass and retaining these sheets of glass in close face to face contact with each other, with protecting pockets placed upon the upper and lower end portions of the glass and drawn tightly into place so that the glass will be well protected and permitted of being handled without danger of being broken.

It has been found difficult to ship plate glass in freight cars without the glass becoming broken and therefore there has been provided an improved rack which will be built into a freight car of an ordinary construction and an improved frame to be fitted upon sheets of glass which are assembled in block formation and will be securely held in the rack built in the freight car. This freight car which is indicated in general by the numeral 1 is of a conventional construction and will preferably be of the side door type but may be of the end door type. In the form specifically illustrated the freight car is of the side door type and between the side door and each end of the car a rack will be built. These racks will be of identical construction and therefore only one has been illustrated. This rack is provided with lower beams 2 which extend longitudinally of the box car and will rest upon the floor of the box car. Each beam is formed of upper and lower sections 3 and 4 which have their meeting edge faces recessed to provide sockets for rotatably receiving the trunnions at the ends of the rollers 5. These rollers are disposed in spaced relation to each other longitudinally of the rack, as shown in Figs. 1 and 3 so that the glass containing frames may be easily slid into and out of the compartments or slideways of the rack. Standards 6 extend upwardly from the lower beams 2 in spaced relation to each other longitudinally of the rack and have their upper ends suitably secured to longitudinally extending bars 7 between which extend cross bars 8 which serve to brace the rack transversely of the box car. It will therefore be seen that this improved rack may be easily built into a box car of the ordinary construction and each rack will extend from an end of the box car to a point adjacent the center door and will occupy the box car for the full distance between the side walls of the car. The packages of glass are to be slid into the compartments of the rack and securely held against sliding movement longitudinally in the box car and therefore there have been provided draw bolts 9 which are loosely connected with the eyes 10 of the bearing plates 11. These bearing plates are secured upon the upper edge faces of the floor engaging beams 2 so that the draw bolts 9 may extend longitudinally of the beams 2 with their threaded

free ends extending through openings formed in the cross bars or clamping bars 12 which will be disposed transversely in the frame and will rest upon the upper edges of the floor engaging beams. Recesses 13 are provided in these cross bars 12 to receive the extended ends of the bolts 9 and securing nuts 14, and bearing plates 15 are provided in these recesses for engagement by the securing nuts 14 to prevent danger of the securing nuts wearing the cross bar and possibly working through the cross bar.

The sheets of glass 16 which are to be shipped will be placed in face to face contact, as shown in Fig. 4, thereby providing a stack of glass sheets which when secured together, at any rate, will present a block formation, as shown in Fig. 5. This stack or block of glass is to be protected against danger of being easily broken when handled and during the time that the glass is being shipped from one point to another. Therefore there has been provided a protecting packing frame which includes as principal structural members upper and lower pockets or caps 17 which fit upon the upper and lower end portions of the stack of glass and will be drawn tightly into place and secured by adjustable connecting means. Each of these pockets is of the same construction and therefore only one will be described in detail. Referring to Figs. 4 and 5 and particularly to Fig. 4, it will be seen that each pocket is provided with an outer casing 18 which is formed of heavy sheet metal. This casing is formed as a rectangular box which is open at one side so that the pocket may be moved onto the stack of glass. In order to reinforce this casing 18 there has been provided a lining. This lining is formed of thick strips of wood and includes a strip 19 fitting against the head of the casing, side strips 20 which fit against the side walls of the casing and end strips 21 which fit against the end walls of the casing and between the side strips 20. These strips of wood serve to greatly reinforce the metal casing 18 but must be covered with a soft material so that the glass may fit snugly in the pockets and be prevented from contacting with a hard surface which might cause the sheets of glass to be broken. Therefore the lining strips have been covered with padding 22 formed of leather, felt or any other suitable material. The padding which is provided against the strip 19 will be thicker than the padding provided against the strips 20 and 21 as the stack of glass will rest upon the padding provided upon the head of the lower pocket and these edges of the sheets of glass must be well protected. It will readily be seen that if a thick pad were not provided at this point the weight of the glass might cause the sheets to cut through the padding. The glass would then have direct contact with the wooden lining strip 19 and would be liable to be broken.

After the pockets are put in place they are to be drawn towards each other so that they will be held tightly upon the stack of glass and in order to do so there has been provided connecting means at each end of the stack of glass. Each of these connecting means consists of a pair of rods 23 which are loosely connected with the eyes 24 of the bracket 25. These brackets 25 are secured upon the ends of the casing 18 and the rods 23 which are in the form of elongated eye bolts will be extended towards each other and engaged by the turn buckle 26 so that by rotating the turn buckles in the proper direction, the two pockets may be drawn towards each other and firmly seated upon the stack of glass and held in place. The stack of glass will therefore be protected by a frame formed of the pockets and connection means. The stacks of glass can therefore be readily handled and moved into the compartments of the rack built in the box car. After the glass has been put in place the U-shaped clamp strips 27 will be put in place upon the upper edges of the lower floor engaging beams 2 with the end portions 28 of their arms extending in overhanging relation to the lower pockets. The securing bolts 29 will then be tightened so that the clamps 27 will be drawn downwardly into tight engagement with the lower pockets of the glass receiving frames. Therefore the glass receiving frames will be securely held clamped down in place as against vertical movement. Before the nuts of the securing bolts 29 are tightened the cross bars 12 will be put in place with the eye bolts 9 extending through the cross bars and the nuts 14 of these eye bolts will then be tightened so that the cross bars will be drawn into tight engagement with the forward ends of the lower pockets. This will cause the packages of glass to be moved rearwardly as far as possible in the box car and securely held against return movement. It will thus be seen that when the clamps 27 and cross bars are tightened the packages of glass will be securely held in place and cannot be jolted as a car moves over a rough road or by jolts received when a car is brought to a sudden stop or started with a jolt. From an inspection of Fig. 1 it will be seen that a number of packages of glass may be placed in the rack and while these may be made up of sheets of glass which will form packages of varying dimensions, this variation in size will not prevent all of the packages from being securely held in place. It is essential, however, that all the packages in a row transversely of the car be of the same length so that they may all be engaged at their forward ends by a single cross bar, as shown in Fig. 3.

While it is stated that this structure is to be used for packing and shipping sheets of plate glass and the like it is obvious that the same method could be employed in packing and shipping other material of a block formation. This material could be formed of a number of sheets or thin slabs placed in face to face contact in the same manner that the plates of glass are positioned in engagement with each other, or could consist of a single slab or block such as marble and the like which is liable to have the corner portions broken if it is not properly packed and is roughly handled.

Therefore it is to be understood that the right is reserved to make use of this apparatus in packing and shipping any material which may be assembled in a block like formation or of itself have a block like contour.

What is claimed is:

1. Apparatus for shipping material in block formation comprising packing frames for the several blocks, and a rack with means for securing the several packing frames.

2. Apparatus for shipping material in block formation comprising packing frames for the several blocks, a rack affording slideways for the several packed blocks, and clamp means for engaging structural members of said frames and thereby clamping the blocks down in place in the slideways.

3. In a structure of the character described, a rack, a material receiving frame fitting in said rack in a vertical position and movable longitudinally into and out of the frame, a cross bar for extending transversely in the rack in front of said frame, and means for clamping said cross bar against said frame and preventing movement of the frame longitudinally in the rack.

4. In a structure of the character described, a rack, a material receiving frame fitting in said rack in a vertical position and movable longitudinally into and out of the frame, a cross bar for extending transversely in the rack in front of said frame, and securing bolts carried by said rack and passing through said cross bar for drawing the cross bar into engagement with the frame to prevent longitudinal movement of the frame.

5. In a structure of the character described, a rack having vertical partitions dividing the rack into compartments for receiving material in block formation and supporting the material in an upright position, and means carried by said partitions for preventing movement of the material lengthwise of the compartments.

6. In a structure of the character described, a rack having vertical partitions dividing the rack into compartments for receiving material in block formation and supporting the material in an upright position, and means carried by said partitions for securing the block formations by their lower portions against vertical movement of the material in the compartments.

7. In a structure of the character described, a rack having vertical partitions dividing the rack into compartments for receiving material in block formation and supporting the material in an upright position, and clamp means disposed transversely upon said partitions and extending into the compartments for engaging material placed therein and preventing vertical movement of the material.

8. In a structure of the character described, a rack having vertical partitions dividing the rack into compartments for receiving material in block formation and supporting the material in an upright position, and U-shaped clamps adjustably secured upon said partitions in upright transverse relation thereto and having their arms provided with angularly disposed end portions extending into the compartments for engaging material placed therein and preventing vertical movement of the material.

9. In a structure of the character described, a rack having vertical partitions dividing the rack into compartments for receiving material in block formation and supporting the material in an upright position, and means carried by said partitions for preventing longitudinal movement of the material when placed in the compartments in a set position.

10. In a structure of the character described, a rack having vertical partitions dividing the rack into compartments for receiving material in block formation and supporting the material in an upright position, a cross bar for extending transversely through said rack in front of material placed in said compartments, and means carried by said partitions for moving said cross bar into position for engaging the material and preventing longitudinal movement of the material out of a set position in the compartments.

11. In a structure of the character described, a rack having vertical partitions dividing the rack into compartments for receiving material in block formation and supporting the material in an upright position, a cross bar for extending transversely through said rack in front of material placed in said compartments, and draw bolts carried by said partitions and passing through said cross bar for drawing the cross bar into engagement with material in the compartments and preventing longitudinal movement of the material.

12. In a structure of the character described, a rack having vertical partitions dividing the rack into compartments for re-

ceiving material in block formation and supporting the material in an upright position, a cross bar for extending transversely through said rack in front of material placed in said compartments, and draw bolts pivotally connected with said partitions and adapted to be disposed longitudinally of the partitions and projected through said cross bar for drawing the cross bar into engagement with material and preventing movement of the material longitudinally in the compartments.

13. Apparatus for shipping material in block formation comprising protective caps and means for securing them together on opposite ends of the blocks, a rack affording slideways for the capped blocks, and means for engaging the caps and thereby holding the blocks in place in the slideways.

14. Apparatus for shipping material in block formation comprising protective caps and means for securing them on the lower ends of the blocks, a rack affording slideways for the capped blocks, and securing means for engaging said caps and thereby holding the blocks down as well as against displacement along the slideways.

In witness whereof I have hereunto set my hand.

EDMUND D. CAMPBELL.