Dec. 22, 1964 J. P. DZIEKONSKI 3,162,243

COMBINED RADIATOR AND CONVECTOR HEAT EXCHANGER

Filed May 1, 1961 2 Sheets-Sheet 1

Fig. 1.

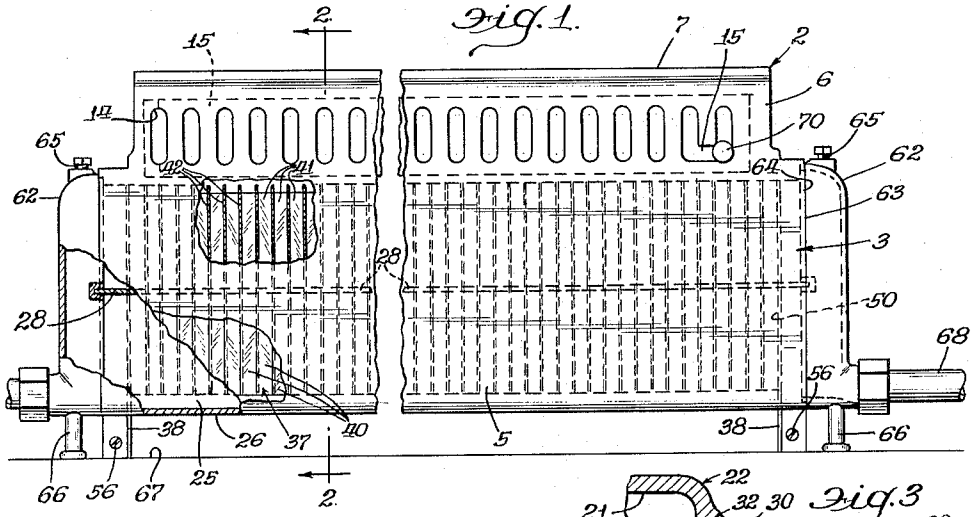

Fig. 3.

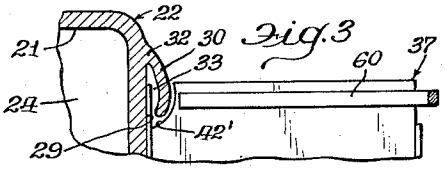

Fig. 2.

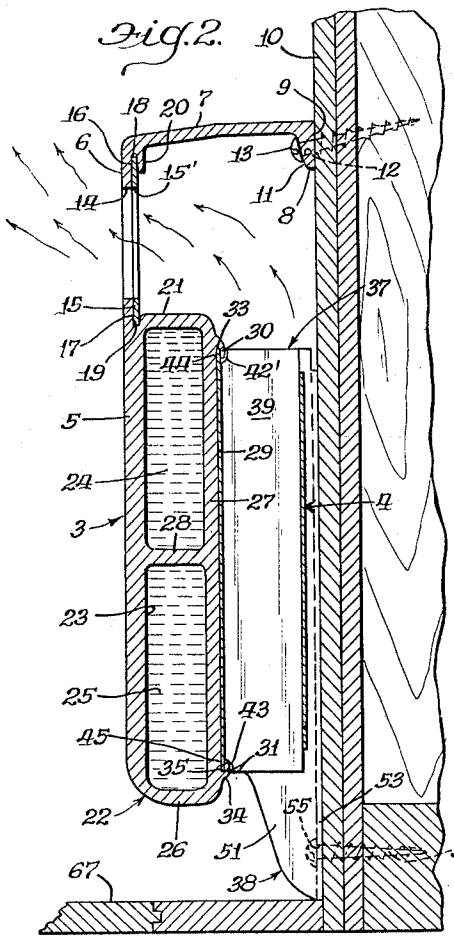

Fig. 4.

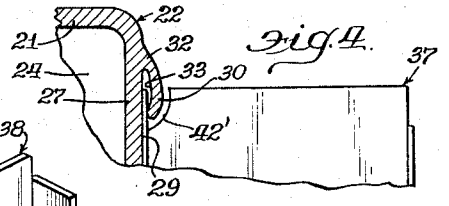

Fig. 6.

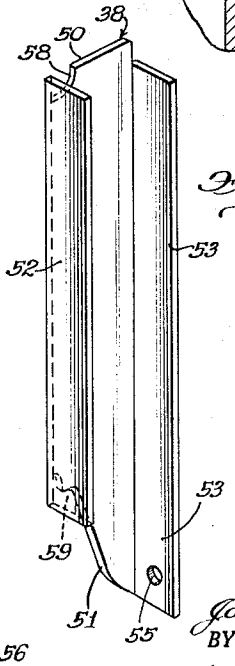

Fig. 5.

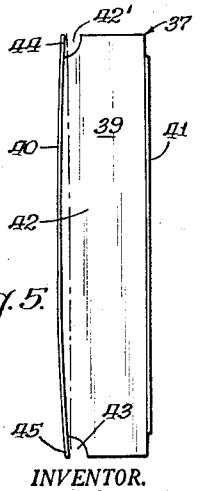

INVENTOR.
James P. Dziekonski
BY
John J. Kowalik
Atty.

Dec. 22, 1964 J. P. DZIEKONSKI 3,162,243

COMBINED RADIATOR AND CONVECTOR HEAT EXCHANGER

Filed May 1, 1961 2 Sheets-Sheet 2

Fig. 8.

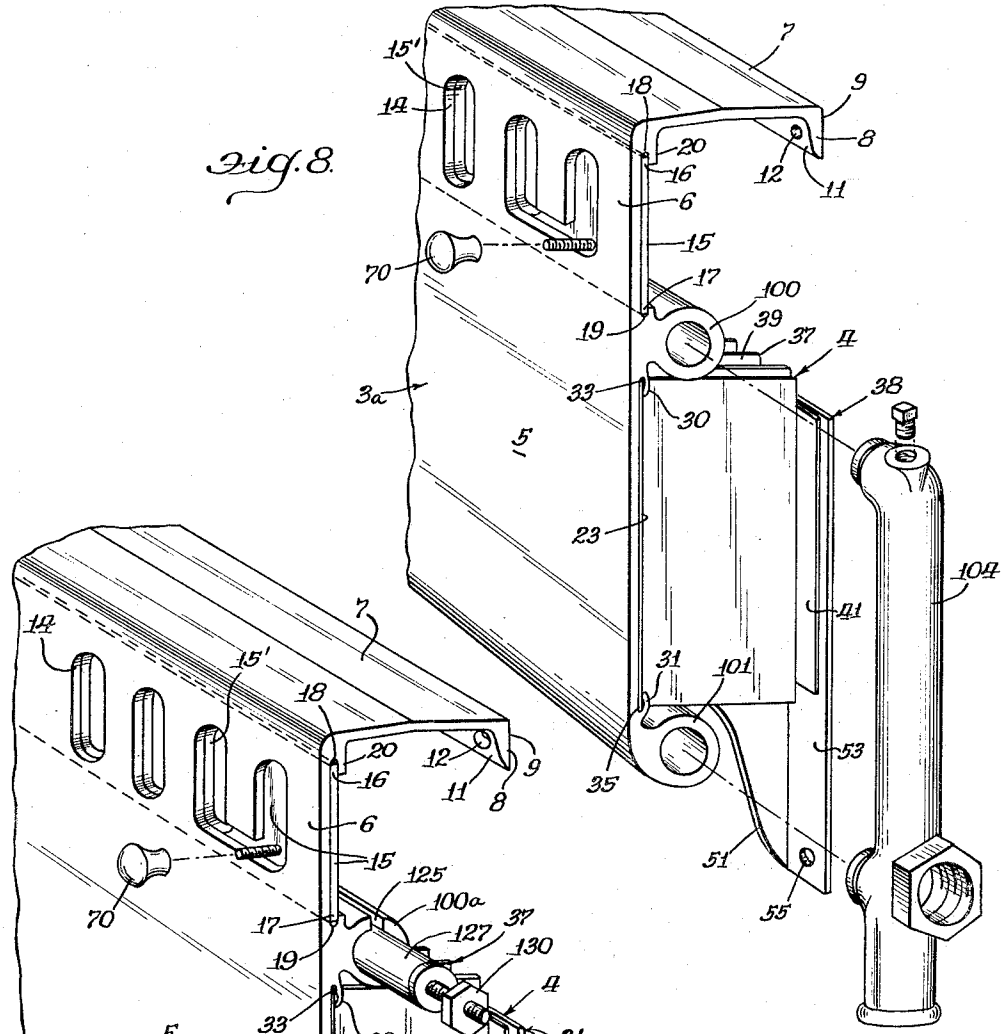

Fig. 9.

Fig. 7.

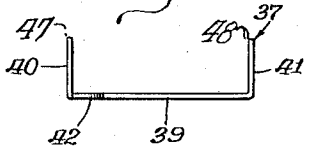

INVENTOR.
James P. Dziekonski
BY
John J. Kowalik
Attys.

United States Patent Office 3,162,243 Patented Dec. 22, 1964

3,162,243

COMBINED RADIATOR AND CONVECTOR HEAT EXCHANGER

James P. Dziekonski, 5407 W. Sunnyside, Chicago, Ill.

Filed May 1, 1961, Ser. No. 106,820
4 Claims. (Cl. 165—55)

This invention relates to heating apparatus.

In general, heat exchangers are classed as radiators or convectors. Each possesses obvious advantages as well as disadvantages.

Inherently radiators are bulky heavy structures of high initial cost and practical considerations have dictated that radiators, particularly for home heating installations, be made of iron castings. Of necessity these castings are standardized dimensionally to obtain mass production. Installation is usually burdensome and lengths must be compromised to multiples of the lengths of the individual sections. Joining of the sections together entails excessive labor costs and frequently obtains leaking joints. On the other hand, radiant heat is prolonged and gives more comfort.

Convectors, of course, are relatively less expensive than radiators. They provide fast heat but must be operated at higher temperatures than radiators. Because they must chimney to effect air movement they are more susceptible to malfunctioning if not properly installed. The heating is akin to hot air systems and must be cycled more frequently than radiators. Fluctuations in temperature are noticeably more pronounced than with radiant heating which has a more stabilizing effect upon the human body.

A general object of the invention is to provide a novel heat exchanger comprising a combination radiator and convector.

The invention comprehends a radiator-convector unit having a novel structural arrangement of parts which lend themselves to easy manufacture as by extrusion from metallic billets such as aluminum alloys.

A further object of the invention is to provide the aforesaid unit which is easily cut and measured to any size and in which the joints in the main span are entirely eliminated.

Another object of the invention is to provide a novel extrusion wherein the main section comprises a longitudinal radiant panel or flaskformed with integral means affording novel and simple thermal connections to convector elements which are fashioned to stack behind the panel and form vertical air passageways therebetween.

The invention contemplates the provision of a basic fin arrangement to provide a convector section for different front radiant panel sections.

A further object of the invention is to devise a novel heat exchange structure comprising a radiant panel segment and a convector fin segment wherein the panel segment incorporates a heat conducting medium in heat exchange relation to the panel section as well as the convector section, said sections incorporating means for stacking the fins of the convector in side by side relation against the back side of the panel between a pair of longitudinal interlocking flanges which are adapted to be clinched over mounting flanges on the fins which are in intimate contact with the panel.

Another object of the invention is to provide a novel contact arrangement between the convector fins and panel wherein either the panel or fin or both are formed with slightly convexed abutting surface areas which, upon the fin and panel being drawn up tightly to each other, are sprung to conforming contours effecting thermal conductivity therebetween whereby minimizing creep and substantially eliminating thermal creaking and optimizing the efficiency of the structure.

A still further object is to provide a novel lightweight structure which is easily handled and molds to any wall and which may be cut to any reasonable increment of length.

It will be understood that although this invention is described in application to the exchange of heat it is applicable as well to carry refrigerant or coolant fluid with suitable blowers to function as air conditioning apparatus.

These and other objects and advantages inherent in and encompassed by the invention will become more readily apparent from the specification and the drawings, wherein:

FIGURE 1 is a broken apart fragmentary side elevational view partially in vertical longitudinal section of one embodiment of the invention;

FIGURE 2 is an enlarged cross-sectional view taken substantially on line 2—2 of FIGURE 1;

FIGURE 3 is a fragmentary section similar to FIGURE 2 illustrating the parts in unsecured position and the clinching tool placed preparatory to bending the securing flange;

FIGURE 4 illustrates the structure of FIGURE 3 in clinched position;

FIGURE 5 is a side elevational view of a convector fin structure;

FIGURE 6 is a perspective view of one of the combination convector fin mounting bracket structures;

FIGURE 7 is an end view of a convector fin structure;

FIGURE 8 is an exploded fragmentary perspective view of another modification of the invention; and

FIGURE 9 is a fragmentary perspective view of a further embodiment of the invention.

Embodiment of FIGURES 1–7

Describing the invention in detail and having particular reference to FIGURES 1–7 of the drawings, there is shown a heat exchanger generally designated 2 comprising a radiator section 3 and a convector section 4.

The radiator section is formed as a metal extrusion of preferably aluminum or aluminum alloy and comprises a vertical substantially flat front panel or wall 5 which has an upper portion 6 which along its upper edge merges into the front edge of a substantially horizontal cover or deflector wall 7, the rear edge of wall 7 being provided with a dependent mounting flange 8 having a rear substantially flat mounting surface 9 adapted to seat against a wall 10. The forward side 11 of flange 8 is beveled downwardly and rearwardly and is apertured at 12 substantially normal to surface 11 at a plurality of points to admit fastening screws 13 therethrough which extend angularly upwardly and rearwardly so as to be readily screwed in by a screw driving tool which may be admitted beneath wall 7 through any of a series of vertically elongated air slots 14 which are formed in the upper portion 6 of the front panel.

The air flow through the slots 14 is controlled by a damper plate 15 which is provided with a corresponding series of complementary openings 15' adapted to be registered with respective slots 14 in the open position of the damper. The openings 14 are adapted to be incrementally closed by longitudinal movement of the damper plate 15 which at its upper and lower edges 16 and 17 projects into longitudinal slots 18 and 19, the slot 18 being defined between the upper edge segment of the portion 6 and an adjacent flange 20 depending from the underside of the baffle wall 7. The lower groove is formed in a top web 21 of a heating medium container or enclosure adjacent to its juncture with the back side 23 of panel 5.

The enclosure or radiating means 22 in the present in-

stance comprises upper and lower sections 24 and 25 in the form of chambers defined by the aforementioned top web 21, a bottom web 26, a rear web 27 and an intermediate web 28. It will be noted that webs 21, 26, 27 and 28 run longitudinally of the unit so that the structure is easily fabricated by extrusion. The webs 21, 26 and 28 are integrally joined to back side 23 of panel 5 and to the web 27.

The back side 29 of the rear web 27 of the enclosure 22 is provided with fastening means in the form of longitudinal substantially coplanar upper and lower flanges 30 and 31. The upper flange 30 is connected along its upper edge 32 to the back side 29 of web 27 and depends therefrom in slightly rearwardly spaced relation thereto and provides a downwardly open admittance groove 33 with the back side 29 of web 27. The lower flange 31 is directed upwardly and is integrally united along its lower edge 34 with the back side 29 of web 27 and projects upwardly in rearwardly spaced relation thereto and defining an admittance groove 35 therewith.

The convector section 4 is comprised of a plurality of fin members 37 and 38. The members 37 are channel shaped in plan and have a vertical transverse wall 39 and front and rear flanges 40 and 41 integral with wall 39. The wall 39 is recessed at its upper and lower edges as at 42' and 43 (FIG. 5) to expose the upper and lower lug portions 44 and 45 of each flange 40 so that they may be easily inserted endwise of flanges 30 and 31 from the ends of the unit 2 into the grooves 33 and 35 in a side by side stacked relation as best seen in FIGURE 1 with the members 38 intervening. The free edges 47 and 48 of flanges 40 and 41 seat against the external side 42 of the next member 37 except that each member 37 adjacent member 38 has its edges 47 and 48 seated against the back side 50 of the transverse web 51 of the channel shaped member 38 which has integral front and rear flanges 52 and 53 which at their free edges seat against the back side 42 of the next member 37. Each member 38 in addition to being a convector or chimney or air passage forming fin structure has a foot extrusion of web 51 and flange 53, the flange 53 being apertured at 55 and admitting a screw 56 therethrough to fasten the bracket 38 to the wall 10.

A feature of the present invention is in convexing the flanges 40 and 52 and/or the surface 29 so that upon clinching by tool 60 (FIG. 3) of the upper and lower flanges or securing ribs 30 and 31 against the upper and lower portions of the front flanges of the members 37 and 38 (web 51 being recessed at 58 and 59 (FIG. 6) to develop such upper and lower portions of web 51) the fins and the radiator portion along their contacting areas will be tightly engaged with each other under a distorting stress. It will be seen that the flanges 30 and 31 are bent forwardly from the position in FIGURE 3 to that shown in FIGURE 4 with attendant straightening of the front flanges of the fins and/or the back side 29 of wall 27.

Each end of the exchanger is provided with a manifold 62 which may be a hollow casting having a free edge portion 63 complemental to the edge 64 of the enclosure section 22 and suitably connected thereto as by brazing or the like. The manifold 62 may have a vent with plug 65 threaded thereinto which may provide a means for connection to a venting device as well known to those skilled in the art. The manifold may have a foot 66 to seat upon a floor 67. The fluid connection 68 extends from the bottom end of the connection and the web 28 extends outwardly beyond webs 21 and 26 and is recessed into the manifold intermediately of the top and bottom ends of the manifold.

It will be understood that by providing an effective connection between the fins and the radiator section good thermal conductivity is obtained. Inasmuch as the fin sections are individual and the entire unit is made of aluminum or the like the fin members are are adapted to accordion while the front section is flexed so as to conform the structure to a supporting wall.

The water or heating medium is carried in the upper and lower tubes or passages 24, 25 and flows from one end to the other. The damper is operated by the handle 70 in obvious manner to control air flow from the inlet defined between the web 26 (FIG. 2), floor 67 and attachment wall 10 through the air passages between members 37 and 38 as best seen at 41 in FIGURE 1 and out of the outlet at the upper end of the heat exchanger as defined by the upper portion of the wall 6 and opposing wall portion 10 below the top wall 7. The outflow of the air is shown by arrows in FIGURE 2.

Embodiment of FIGURE 8

It will be noted that this modification in essence is similar to that of FIGURES 1–7 and like parts are identified with corresponding numerals. In the present instance the radiator portion identified *3a* is modified to the extent that the fluid conduits are formed as cylindrical top and bottom tubes or pipes 100 and 101 and the securing flanges 30 and 31 are integral with the rear side 23 of panel 5 and the members 37 and 38 extend at their forward portions therebetween. The manifold 104 is suitably modified to provide upper and lower nipples which connect to the pipes 100 and 101.

Embodiment of FIGURE 9

The structure of FIGURE 9 is similar to the previous embodiments and parts corresponding thereto are identified by identical numerals. In the present instance the structure is adapted to electrical heating and the upper and lower tubes *100a* and *101a* are split longitudinally as at 125 and 126 and admit and mount the heating elements such as calrods 127 and 128 respectively. Elements 127 and 128 have nut and bolt means 130, 131 to connect to associated electrical conduits.

In essence in each embodiment the front portion of the unit functions as a radiator and the rear portion as a convector. The arrangement of the various parts is such that the structure is particularly adaptable to extrusion which provides the necessary connecting and mounting means so that the parts of the unit may be easily assembled by stacking the fins endwise into the front portion. Various lengths as required are easily made by cutting off the excess. The structure is comformable to uneven walls and can easily be adapted around minor obstructions. A novel interlocking arrangement of the fins with the radiator panel is afforded and the nature of the interlock provides a stiffening beading for the front panel and is highly adaptable to extrusion.

Having described several embodiments of the invention it will be understood that these variations are not disclosed by way of limitation but that various other forms of the invention will become readily apparent to those skilled in the art within the scope of the appended claims.

What is claimed is:

1. An extruded metal baseboard heater for mounting on an attachment wall and having longitudinally elongated radiator portion including integral longitudinal front and rear walls and interconnecting top, bottom and intermediate webs defining longitudinal fluid chambers, means providing fluid inlets and outlets for said chambers, and said intermediate web providing rigidity to said walls of the radiator portion in an area contiguous thereto, said rear wall having vertically spaced bendable longitudinal flanges integral therewith, a plurality of convector fins disposed in laterally spaced relation against said rear wall, said rear wall and fins having contacting surfaces for establishing thermal conductance therebetween, one of the surfaces being flat and the other being convex, and means including said flanges holding said fins edgewise under tension along its edges remote from the rear wall and under compression against the rear wall with the surfaces on the fins in conformance with the surface on the

rear wall and in complementary engagement between said surfaces with a fulcrum reaction against said intermediate web to provide good thermal contact therebetween, said fins defining convection air passages therebetween having air inlets at their lower ends defined between said attachment wall and the lower end of said radiator portion, said front wall having an apertured upper section extending above said radiator portion and defining with said attachment wall an air outlet space for said air passages, and a top wall integral with said upper section and extending toward said attachment wall above said air outlet space and having means thereon for attachment to said attachment wall.

2. An extruded metal heat exchanger for attachment to a building wall and having a radiant portion comprising an elongate structure presenting inner and outer surfaces, means providing a conduction for a heating medium in said radiant portion and having inlet and outlet ends, and said radiant portion having a pair of transversely spaced integral securing flanges projecting outwardly from said inner surface, and convector elements positioned against said inner side of the elongate structure and defining vertical convector passages, with an air inlet extending from below said radiant portion rearwardly to said building wall and an air outlet above the passages extending above said radiant portion in front of said building wall, each element having an abutment flange with end portions adjacent respective securing flanges, said abutment flange engaging said inner surface of the elongate structure, each said element further having a wall connected to said abutment flange and projecting away from said structure, said wall being notched adjacent said end portions of the abutment flange whereby said securing flanges being bendable are adapted to be bent over said end portions by entering into respective notches.

3. An extruded metal baseboard heating structure comprising a radiator portion for attachment to a wall, said radiator portion including conduit means having fluid inlet and outlet means at opposite ends, said radiator portion presenting vertical spaced back and front surfaces, a convector structure behind the radiator portion and comprising a plurality of plates spaced side by side in laterally aligned relation and defining vertical air passages therebetween with an air inlet therebelow and an air outlet thereabove, said plates having top and bottom ends with notches and vertical surfaces therebetween opposing the back surface of the radiator portion, said surfaces on the plates and said back surface on the radiator portion in preassembly having non-mating contours, and bendable flange means projecting from said back surface of the radiator portion and embracing the ends of the plates, said flanges being bent over said ends of the plates and extending into said notches and securing said plates against said radiator portion under stress mating said surfaces on the plates with the surface on the radiator portion.

4. An extruded metal thermal unit comprising a front horizontally elongated radiant section having front and rear sides and a rear convector section, said radiant section having means providing inlets and outlets for associated heating medium, said radiant section having a rear surface with convector connecting means including extruded longitudinal bendable flanges, said convector section comprising a plurality of fin elements stacked side by side each having an edge portion presenting a surface in abutment with said rear surface of the radiant section for establishing thermal conductance therebetween, one of said surfaces being flat and the other being convex, and means including said flanges holding said fin elements edgewise under tension along their edges remote from the rear surface and under compression along their edges against the rear surface with the surfaces on said elements in conformance with the rear surface and in complementary engagement therewith, said elements having a fulcrum reaction against the convector section to provide good thermal contact therebetween, said elements defining convection air passages therebetween having air inlets at their lower ends and air outlets at their upper ends.

References Cited by the Examiner

UNITED STATES PATENTS

1,788,201	1/31	Murray et al.	219—38
1,907,527	5/33	Erskine	165—55
2,516,871	8/50	Haugen	165—67
2,525,371	10/50	Reynolds	98—41
2,576,848	11/51	Mercier et al.	98—41
2,733,049	1/56	Carter	219—34
2,782,007	2/57	Glatt	219—34
2,793,007	5/57	Reynolds	165—67 X
2,892,065	1/59	Persak	219—38
2,967,225	3/61	Carrier et al.	219—38

CHARLES SUKALO, *Primary Examiner.*

HERBERT L. MARTIN, PERCY L. PATRICK, *Examiners.*