(12) INTERNATIONAL APPLICATION PUBLISHED UNDER THE PATENT COOPERATION TREATY (PCT)

(19) World Intellectual Property Organization
International Bureau

(43) International Publication Date
18 November 2021 (18.11.2021)

WIPO | PCT

(10) International Publication Number
WO 2021/232027 A1

(51) International Patent Classification:
H02G 15/06 (2006.01) *H01R 11/12* (2006.01)
H02G 7/05 (2006.01) *H01B 7/18* (2006.01)
H01R 13/627 (2006.01)

(21) International Application Number:
PCT/US2021/033499

(22) International Filing Date:
20 May 2021 (20.05.2021)

(25) Filing Language: English

(26) Publication Language: English

(30) Priority Data:
62/704,516 14 May 2020 (14.05.2020) US

(71) Applicant: **CTC GLOBAL CORPORATION** [US/US]; 2026 McGaw Avenue, Irvine, California 92614 (US).

(72) Inventors: **WEBB, William**; 2026 McGaw Avenue, Irvine, California 92614 (US). **WONG, Christopher**; 2026 McGaw Avenue, Irvine, California 92614 (US).

(74) Agent: **DOCKERY, David F.**; The Navitas Intellectual Property Group LLC, 4600 South Syracuse Street, Suite 900, Denver, Colorado 80237 (US).

(81) Designated States *(unless otherwise indicated, for every kind of national protection available)*: AE, AG, AL, AM, AO, AT, AU, AZ, BA, BB, BG, BH, BN, BR, BW, BY, BZ, CA, CH, CL, CN, CO, CR, CU, CZ, DE, DJ, DK, DM, DO, DZ, EC, EE, EG, ES, FI, GB, GD, GE, GH, GM, GT, HN, HR, HU, ID, IL, IN, IR, IS, IT, JO, JP, KE, KG, KH, KN, KP, KR, KW, KZ, LA, LC, LK, LR, LS, LU, LY, MA, MD, ME, MG, MK, MN, MW, MX, MY, MZ, NA, NG, NI, NO, NZ, OM, PA, PE, PG, PH, PL, PT, QA, RO, RS, RU, RW, SA, SC, SD, SE, SG, SK, SL, ST, SV, SY, TH, TJ, TM, TN, TR, TT, TZ, UA, UG, US, UZ, VC, VN, WS, ZA, ZM, ZW.

(84) Designated States *(unless otherwise indicated, for every kind of regional protection available)*: ARIPO (BW, GH, GM, KE, LR, LS, MW, MZ, NA, RW, SD, SL, ST, SZ, TZ, UG, ZM, ZW), Eurasian (AM, AZ, BY, KG, KZ, RU, TJ, TM), European (AL, AT, BE, BG, CH, CY, CZ, DE, DK, EE, ES, FI, FR, GB, GR, HR, HU, IE, IS, IT, LT, LU, LV, MC, MK, MT, NL, NO, PL, PT, RO, RS, SE, SI, SK, SM, TR), OAPI (BF, BJ, CF, CG, CI, CM, GA, GN, GQ, GW, KM, ML, MR, NE, SN, TD, TG).

Declarations under Rule 4.17:
— *of inventorship (Rule 4.17(iv))*

Published:
— *with international search report (Art. 21(3))*
— *before the expiration of the time limit for amending the claims and to be republished in the event of receipt of amendments (Rule 48.2(h))*
— *with information concerning request for restoration of the right of priority in respect of one or more priority claims (Rules 26bis.3 and 48.2(b)(vii))*

(54) **Title:** TERMINATION ARRANGEMENT FOR AN OVERHEAD ELECTRICAL CABLE INCLUDING A TENSILE STRAIN SHEATH

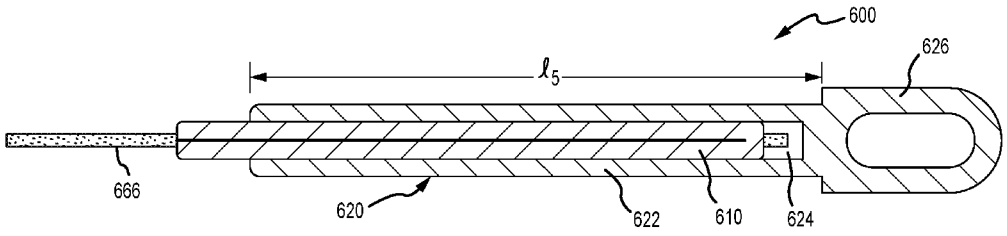

FIG.6A

(57) **Abstract:** A termination arrangement for securing an overhead electrical cable and a method for securing an overhead electrical cable. The termination arrangement includes a longitudinally-extending sheath having a high tensile modulus that is configured to receive a strength member of the overhead electrical cable therein. When a connector body is crimped over the strength member, the sheath substantially reduces the tensile strain experienced by the strength member and reduces the risk of fracturing the strength member.

WO 2021/232027 A1

TERMINATION ARRANGEMENT FOR AN OVERHEAD ELECTRICAL CABLE INCLUDING A TENSILE STRAIN SHEATH

CROSS-REFERENCE TO RELATED APPLICATIONS

[0001] This application claims the priority benefit of US Provisional Patent Application No. 62/704,516 by Webb et al. and filed on May 14, 2020, which is incorporated herein by reference in its entirety.

FIELD

[0002] This disclosure relates to the field of termination arrangements, including dead ends and splices, for use with overhead electrical cables having composite strength members.

SUMMARY

[0003] In one embodiment a termination arrangement is disclosed. The termination arrangement is configured for securing an overhead electrical cable comprising a strength member and an electrical conductor disposed around the strength member. The termination arrangement includes: a connector comprising a fastener disposed at a first end of the connector and a connector body extending from the fastener toward an end of the connector that lies opposite the fastener; a longitudinally-extending sheath having a central bore extending therethrough that is configured to receive a strength member within the central bore; and a conductive sleeve configured to be disposed over: (i) an end of the electrical cable, (ii) the sheath, and (iii) at least a portion of the connector body when the termination arrangement is operatively assembled.

[0004] In another embodiment, a termination arrangement that is secured to an overhead electrical cable comprising a strength member and an electrical conductor disposed around the strength member is disclosed. The termination arrangement includes: a connector comprising a fastener disposed at a first end of the connector and a connector body extending from the fastener toward an end of the connector that lies opposite the fastener; a longitudinally-extending sheath having a central bore extending therethrough that is operatively disposed over and compressed onto a portion of the

strength member to operatively grip the strength member; and a conductive sleeve that is disposed over (i) an end of the electrical cable, (ii) the sheath, and (iii) at least a portion of the connector body. The sheath is operatively attached to the connector body by one of (i) being disposed within a chamber in the connector body and having the connector body crimped onto the sheath, or (ii) being disposed within the conductive sleeve and having the conductive sleeve crimped onto the sheath.

[0005] In another embodiment, a method for the termination of an overhead electrical cable including a strength member and an electrical conductor disposed around the strength member is disclosed. The method includes the steps of comprising the steps of: removing the electrical conductor from a termination end of the electrical cable to expose an end portion of the strength member; placing the exposed end portion of the strength member through a central bore disposed within a longitudinally extending sheath; operatively attaching the sheath to a connector, the connector comprising a fastener disposed at a first end of the connector and a connector body extending from the fastener toward an end of the connector that lies opposite the fastener, the attaching comprising one of (i) disposing the sheath within a chamber in the connector body and crimping the connector body onto the steel sheath, or disposing the sheath within a conduit of a conductive sleeve and crimping the conductive sleeve onto the sheath.

DESCRIPTION OF THE DRAWINGS

[0006] **FIGS. 1A** and **1B** illustrate two examples of an overhead electrical cable having a composite strength member according to the prior art.

[0007] **FIG. 2** illustrates a partial cross-section of a termination arrangement for an overhead electrical cable having a composite strength member according to the prior art.

[0008] **FIG. 3** illustrates a perspective view of a termination arrangement for an overhead electrical cable having a composite strength member according to the prior art.

[0009] **FIGS. 4A** and **4B** illustrate a partial cross-section of a termination arrangement for an overhead electrical cable having a composite strength member according to the prior art.

[0010] **FIGS. 5A** and **5B** illustrate an embodiment of a termination arrangement according to the present disclosure.

[0011] **FIGS. 6A** and **6B** illustrate an embodiment of a termination arrangement according to the present disclosure.

[0012] **FIGS. 7A** to **7E** illustrate an embodiment of a steel sheath according to the present disclosure.

[0013] **FIGS. 8A to 8D** illustrate an embodiment of a termination arrangement according to the present disclosure.

[0014] **FIGS. 9A** to **9D** illustrate an embodiment of a termination arrangement according to the present disclosure.

[0015] **FIG. 10** schematically illustrates a method for measuring the strain placed on a composite strength member during crimping.

DESCRIPTION OF THE EMBODIMENTS

[0016] Overhead electrical transmission and distribution lines are constructed by elevating electrical cables (e.g., bare, non-insulated electrical cables) above the terrain using support towers (e.g., pylons). The transmission and distribution lines may span many miles, requiring extremely long lengths of electrical cable and many support towers. Some of the support towers are referred to as dead-end towers or anchor towers, and are placed at termination points, e.g., power substations or locations where the electrical line is routed underground. Dead-end towers may also be required where the electrical line changes direction (e.g., makes a turn), or at regular intervals in a long, straight line path. Another type of termination arrangement is a splice, which is used to make a mechanical and electrical connection between the ends of two adjacent electrical cables in an electrical line.

[0017] Overhead electrical cables have traditionally been constructed using an inner steel strength member surrounded by a plurality of conductive aluminum strands that are helically wrapped around the steel strength member, a configuration referred to as “aluminum conductor steel reinforced” (ACSR). Recently, overhead electrical cables

having a fiber-reinforced composite strength member have been manufactured and deployed in many electrical lines. As compared to steel, the fiber-reinforced composite materials used for the strength member have a lighter weight, lower thermal expansion and higher specific stiffness. However, fiber-reinforced materials do not reach a yield point where plastic deformation occurs when the materials are stressed.

[0018] Such fiber-reinforced composite strength members may include a single fiber-reinforced composite strength element (e.g., a single rod) as illustrated in **FIG. 1A**. An example of such a configuration is disclosed in U.S. Pat. No. 7,368,162 by Hiel et al., which is incorporated herein by reference in it is entirety. Alternatively, the composite strength member may be comprised of a plurality of individual fiber-reinforced composite strength elements (e.g., individual rods) that are operatively combined (e.g., twisted or stranded together) to form the strength member, as is illustrated in **FIG. 1B**. Examples of such multi-element composite strength members include, but are not limited to: the multi-element aluminum matrix composite strength member illustrated in U.S. Patent No. 6,245,425 by McCullough et al.; the multi-element carbon fiber strength member illustrated in U.S. Patent No. 6,015,953 by Tosaka et al.; and the multi-element strength member illustrated in U.S. Patent No. 9,685,257 by Daniel et al. Each of these U.S. patents is incorporated herein by reference in its entirety. Other configurations for the fiber-reinforced composite strength member may be implemented as is known to those skilled in the art.

[0019] Referring to the overhead electrical cable illustrated in **FIG. 1A**, the cable **160A** includes an electrical conductor **162A** that includes a first conductive layer **164a** and a second conductive layer **164b**, each comprising a plurality of individual conductive strands that are helically wrapped around a fiber-reinforced composite strength member **166A**. It will be appreciated that such overhead electrical cables may include a single conductive layer, or more than two conductive layers, depending upon the desired use of the overhead electrical cable. The conductive strands may be fabricated from conductive metals such as copper or aluminum, and for use in bare overhead electrical cables are typically fabricated from aluminum, e.g., hardened aluminum, annealed aluminum, and/or aluminum alloys. As illustrated in **FIG. 1A**, the conductive strands have a substantially trapezoidal cross-section, although other configurations may be employed, such as

circular cross-sections. The use of polygonal cross-sections such as the trapezoidal cross-section advantageously increases the cross-sectional area of conductive metal for the same effective cable diameter, e.g., as compared to strands having a circular cross-section.

[0020] The conductive materials, e.g., aluminum, do not have sufficient mechanical properties (e.g., sufficient tensile strength) to be self-supporting when strung between support towers to form an overhead electrical line for transmission and/or distribution of electricity. Therefore, the overhead electrical cable **160A** includes the strength member **166A** to support the conductive layers **164a/164b** when the overhead electrical cable **160A** is strung between the support towers under high mechanical tension. In the embodiment illustrated in **FIG. 1A**, the strength member **166A** includes a single (e.g., only one) strength element **168A**. The strength element **168A** includes a core **170A** of high strength carbon reinforcing fibers in a binding matrix and a galvanic layer **172A**, e.g., comprised of glass fibers, to prevent contact between the carbon fibers and the first conductive layer **164A**, which may lead to corrosion of the aluminum.

[0021] **FIG. 1B** illustrates an embodiment of an overhead electrical cable **160B** that is similar to the electrical cable illustrated in **FIG. 1A**, wherein the strength member **166B** comprises a plurality of individual strength elements (e.g., strength element **168B**) that are stranded or twisted together to form the strength member **166B**. Although illustrated in **FIG. 1B** as including seven individual strength elements, it will be appreciated that a multi-element strength member may include any number of strength elements that is suitable for a particular application.

[0022] As noted above, the fiber-reinforced composite material from which the strength elements are constructed may include reinforcing fibers that are operatively disposed in a binding matrix. The reinforcing fibers may be substantially continuous reinforcing fibers that extend along the length of the fiber-reinforced composite, and/or may be short reinforcing fibers (e.g., fiber whiskers or chopped fibers) that are dispersed through the binding matrix. The reinforcing fibers may be selected from a wide range of materials including, but not limited to, carbon, glass, boron, metal oxides, metal carbides, high-strength polymers such as aramid fibers or fluoropolymer fibers, basalt fibers and

the like. Carbon fibers are particularly advantageous in many applications due to their very high tensile strength, and/or due to their relatively low coefficient of thermal expansion (CTE).

[0023] The binding matrix may include, for example, a plastic (e.g., polymer) such as a thermoplastic polymer or a thermoset polymer. For example, the binding matrix may include a thermoplastic polymer, including semi-crystalline thermoplastics. Specific examples of useful thermoplastics include, but are not limited to, polyether ether ketone (PEEK), polypropylene (PP), polyphenylene sulfide (PPS), polyetherimide (PEI), liquid crystal polymer (LCP), polyoxymethylene (POM, or acetal), polyamide (PA, or nylon), polyethylene (PE), fluoropolymers and thermoplastic polyesters.

[0024] The binding matrix may also include a thermosetting polymer. Examples of useful thermosetting polymers include, but are not limited to, benzoxazine, thermosetting polyimides (PI), polyether amide resin (PEAR), phenolic resins, epoxy-based vinyl ester resins, polycyanate resins and cyanate ester resins. In one exemplary embodiment, a vinyl ester resin is used in the binding matrix. Another embodiment includes the use of an epoxy resin, such as an epoxy resin that is a reaction product of epichlorohydrin and bisphenol A, bisphenol A diglycidyl ether (DGEBA). Curing agents (*e.g.*, hardeners) for epoxy resins may be selected according to the desired properties of the fiber-reinforced composite strength member and the processing method. For example, curing agents may be selected from aliphatic polyamines, polyamides and modified versions of these compounds. Anhydrides and isocyanates may also be used as curing agents. Other examples of polymeric materials useful for a binding matrix may include addition cured phenolic resins, *e.g.*, bismaleimides (BMI), polyetheramides, various anhydrides, or imides.

[0025] The binding matrix may also be a metallic matrix, such as an aluminum matrix. One example of an aluminum matrix fiber-reinforced composite is illustrated in U.S. Patent No. 6,245,425 by McCullough et al., noted above.

[0026] One configuration of a composite strength member for an overhead electrical cable that is particularly advantageous is the ACCC® composite configuration that is available from CTC Global Corporation of Irvine, CA and is illustrated in U.S. Pat. No.

7,368,162 by Hiel et al., noted above. In the commercial embodiment of the ACCC® electrical cable, the strength member is a single element strength member of substantially circular cross-section that includes an inner core of substantially continuous reinforcing carbon fibers disposed in a polymer matrix. The core of carbon fibers is surrounded by a robust insulating layer of glass fibers that are also disposed in a polymer matrix and insulate the carbon fibers from the surrounding conductive aluminum strands. See **FIG. 1A**. The glass fibers also have a higher compressive strain capability than the carbon fibers and provide bendability so that the strength member and the electrical cable can be wrapped upon a spool for storage and transportation.

[0027] During installation of the electrical line, the overhead electrical cable must be terminated and secured to the dead-end tower under high tension. Overhead electrical cables utilizing a steel or other ductile metal strength members can be attached to a termination arrangement by crimping the components surrounding the strength member using high compressive forces since the underlying strength member is ductile and will not fracture under the compressive stresses. Fiber-reinforced composite strength members, having a lower ductility and elongation to break than steel, are susceptible to being fractured under high compressive forces, and termination arrangements for such strength members are typically designed to reduce the compressive force on the strength member. **FIGS. 2** to **4** illustrate two different termination arrangements that are particularly useful for overhead electrical cables having a fiber-reinforced composite strength member. **FIG. 2** illustrates a cross-section of a termination arrangement (e.g., a dead-end) for use with a bare overhead electrical cable, i.e., to terminate an electrical cable while maintaining the cable under high tension. The termination arrangement **200** illustrated in **FIG. 2** is similar to that illustrated and described in PCT Publication No. WO 2005/041358 by Bryant and in U.S. Patent No. 8,022,301 by Bryant et al., each of which is incorporated herein by reference in its entirety.

[0028] Broadly characterized, the termination arrangement **200** illustrated in **FIG. 2** includes a gripping element **210** that is secured to a connector **220**, which anchors the termination arrangement **200** to a dead-end structure (e.g., to a tower), not illustrated, e.g., with a fastener **226** (e.g., an eyebolt). At the end of the termination arrangement **200**, opposite the fastener **226**, the termination arrangement **200** is operatively connected

to a bare overhead electrical cable **260** that includes an electrical conductor **262** (e.g., comprising conductive strands) that surrounds and is supported by a strength member **266**, e.g., a fiber-reinforced composite strength member.

[0029] The gripping element **210** tightly grips the strength member **266** to secure the overhead electrical cable **260** to the termination arrangement **200**. As illustrated in **FIG. 2**, the gripping element **210** includes a compression-type fitting, specifically a collet **212** having a lumen **216** (e.g., a bore) that surrounds and grips onto the strength member **266**. The collet **212** is disposed in a collet housing **214**, and as the electrical cable **260** is tensioned (e.g., is pulled onto support towers), friction develops between the strength member **266** and the collet **212** as the collet **212** is pulled further into the collet housing **214**. The conical (outer) shape of the collet **212** and the mating inner funnel shape of the collet housing **214** increase the compression on the strength member **266**, ensuring that the strength member **264** does not slip out of the collet **212** and therefore that the overhead electrical cable **260** is secured to the termination arrangement **200**.

[0030] As illustrated in **FIG. 2**, a conductive outer sleeve **240** is disposed over the gripping element **210** that includes a conductive body **244** to facilitate electrical conduction between the electrical conductor **262** and a jumper plate **246**. An inner sleeve **248** (e.g., a conductive inner sleeve) may be placed between the conductor **262** and the conductive body **244** to facilitate the electrical connection between the conductor **262** and the conductive body **244**. The inner sleeve **248** and the conductive body **244** may be fabricated from aluminum, for example. The jumper plate **246** is attached (e.g., welded) to the conductive body **244** and is configured to attach to a connection plate **276** to facilitate electrical conduction between the electrical conductor **262** and another conductor, e.g., another electrical cable (not illustrated) that is in electrical communication with the connector plate **276**.

[0031] The connector **220** includes a fastener **226** and gripping element mating threads **228** disposed at a gripping element end of the connector **220**, with a connector body **222** disposed between the fastener **226** and the gripping element mating threads **228**. The gripping element mating threads **228** are configured to operatively mate with connector mating threads **218** on the collet housing **214** to facilitate movement of the

connector **220** toward the collet **212** when the threads **218** and **228** are engaged and the connector **220** is rotated relative to the collet housing **214**, pushing the collet **212** into the collet housing **214**. This strengthens the grip of the collet **212** onto the strength member **266**, securing the overhead electrical cable **260** to the termination arrangement **200**. The fastener **226** is configured to be attached to a dead-end structure, e.g., to a dead-end tower, to secure the termination arrangement **200** and the electrical cable **260**, to the dead-end structure.

[0032] After assembly of the termination arrangement, the outer sleeve may then be crimped (e.g., compressed, swaged) onto portions of the underlying structure to prevent movement of the outer sleeve and/or to enhance the connection between the conductive body and the electrical conductor. **FIG. 3** illustrates a perspective view of a termination arrangement similar to that shown in **FIG. 2** that has been crimped onto an overhead electrical cable. The termination arrangement **300** includes a connector having a fastener **326** that extends outwardly from a proximal end of an outer sleeve **340**. A jumper plate **346** is integrally formed with the conductive body **342** for electrical connection to a connection plate (e.g., see **FIG. 2**). As illustrated in **FIG. 3**, the outer sleeve **340** is crimped over (e.g., onto) two regions of the underlying structure, namely crimped sleeve region **340b** and crimped sleeve region **340a**. Crimped sleeve region **340b** is generally situated over the connector body (e.g., see **222** in **FIG. 2**), and the crimped sleeve region **340a** is generally situated over a portion of the overhead electrical cable **360**, e.g., to enhance the electrical connection to the electrical cable. The compressive forces placed onto the outer sleeve **340** during the crimping operation are transferred to the underlying components, i.e., to the connector body under the crimped region **340b** and to the overhead electrical cable **360** under the crimped region **340a**.

[0033] The foregoing termination arrangement utilizes a smooth surfaced collet **214** to grip onto the composite strength over a sufficient length such that points of high stress are generally avoided and the composite strength member is unlikely to fracture under the collet.

[0034] **FIGS. 4A** and **4B** illustrate an alternative prior art termination arrangement **400** for use with composite strength members. For the sake of clarity, **FIGS. 4A** and **4B**

illustrate the relevant components of the termination arrangement, omitting the outer sleeve, jumper plate, etc. illustrated in **FIGS. 2** and **3**. Rather than using a tapered collet to grip the strength member, the termination arrangement illustrated in **FIGS. 4A** and **4B** is secured to the strength member by radial compression (e.g., crimping, swaging) of the connector body onto the strength member using a crimping tool, e.g., using a hydraulic press. The arrangement **400** includes a steel connector **420** having a connector body **422** and a fastener **426** (e.g., an eyebolt). An inner sleeve **432** of aluminum, which is softer than the surrounding steel connector body **422**, is placed between the composite strength member **466** and the connector body **422**. The crimping operation typically includes sequentially crimping the connector body with a crimping tool beginning at the proximal end. i.e., near the fastener **426**, and working toward the distal end. The crimping tool may apply up to about 100 tons of compressive force to the connector body **422** to secure the connector body to the strength member **466**. The inner aluminum sleeve **432** is intended to redistribute a portion of this radial crimping force so that the force on the strength member **466** is reduced.

[0035] When the connector body **422** is crimped onto the underlying inner aluminum sleeve **432** and strength member **466** as illustrated in **FIG. 4B**, the sleeve **432** and body **422** elongate due to the crimping force, e.g., from initial length l_1 (**FIG. 4A**) to an expanded length l_2 (**FIG. 4B**). When this elongation occurs, the aluminum sleeve **432** is expected to slide over the strength member **466** as the sleeve **432** elongates, imparting little to no elongation strain onto the strength member. For example, crimping the connector body **422** may elongate the aluminum sleeve **432** by up to about 5%, substantially higher than the strain to failure limit of the underlying composite strength member **466**, which is typically less than 2%. However, it has been found that the aluminum sleeve **432** may "pull" the underlying strength member **466**, e.g., due to frictional forces, such that the strength member **466** elongates with the sleeve **432**, which subjects the strength member to a high elongation (e.g., tensile) strain. If the elongation strain is too high, the strength member **466** may fracture (e.g., fracture **466f**) due to the lower elongation properties of the composite strength member **466**.

[0036] It is an objective to provide a termination arrangement that reduces the amount of elongation strain on the strength member caused by the crimping of the surrounding

components. In the embodiments of this disclosure, the elongation strain on the strength member is reduced or substantially eliminated by placing a high tensile modulus sheath, e.g., a hard steel sheath, over the strength member. The steel sheath is then compressed onto the strength member by crimping a connector body and/or crimping a conductive sleeve onto the steel sheath. The properties of the sheath, e.g., the material from which the sheath is fabricated and/or the wall thickness of the sheath, protects the strength member from being subjected to tensile strains that may damage the strength member, and the sheath may be referred to as a tensile strain sheath. Although generally described herein as a steel sheath, the tensile strain sheath may be fabricated from other high tensile modulus materials, e.g., materials having a higher tensile modulus than aluminum. In addition to steel (e.g., hardened steel), the sheath may also be fabricated from materials such as high tensile modulus composites, e.g., carbon fiber, boron fiber or ceramic fiber in a matrix such as a thermosetting polymer matrix, a thermoplastic polymer matrix, or a metal matrix. In one characterization, the tensile strain sheath is fabricated from a material having a tensile modulus of at least about 125 GPa, such as at least about 150 GPa, or even at least about 175 GPa.

[0037] **FIGS. 5A** and **5B** illustrate one embodiment of a termination arrangement according to the present disclosure. The termination arrangement **500** is configured for securing an overhead electrical cable that includes a strength member and an electrical conductor (e.g., conductive strands) disposed around the strength member. Broadly characterized, the termination arrangement includes a sheath (e.g., a steel sheath) that operatively surrounds the strength member of the overhead electrical cable to reduce elongation strain on the strength member.

[0038] Referring to **FIGS. 5A** and **5B**, the termination arrangement **500** includes a connector **520** having a connector body **522** and a fastener **526**. The connector body **522** defines an internal cylindrical chamber **524** for receiving the strength member **566** therein. A steel sheath **510**, optionally having one or more slits **514**, is placed over the strength member **566** so that the sheath **510** is disposed between the strength member **566** and the connector body **522**. In the embodiment illustrated in **FIGS. 5A** and **5B**, an inner sleeve **532**, e.g., an aluminum sleeve that is softer than the connector body **522** and the sheath **510**, is placed between the steel sheath **510** and the connector body **522**.

[0039] **FIG. 5A** illustrates the termination arrangement **500** in an uncrimped state, e.g., before the connector body **522** is crimped onto the underlying aluminum inner sleeve **532**, steel sheath **510** having one or more slits **514**, and strength member **566**. Before crimping, the connector body has an initial length l_3. **FIG. 5B** illustrates the termination arrangement **500** after crimping the connector body **522** onto the underlying components. The crimping process involves using a crimping tool to compress a portion of the connector body **522**, working from the distal end of the connector body **522**, i.e., adjacent to the fastener **526,** toward the opposite end until the connector body **522** is crimped along its length overlying the sleeve **532** and sheath **510**, e.g., as illustrated in **FIG. 5B**. As with the embodiment shown in **FIG. 4B** above, the connector body elongates due to the crimping strain to an expanded length l_4, as does the aluminum sleeve **532**. However, the underlying steel sheath **510** substantially resists elongation and therefore limits the elongation of the strength member **566**, e.g., to a point substantially below that required to fracture the strength member **566**. In one characterization, the steel sheath **510** is formed from a steel that is harder than the steel used to form the connector body **522**. In this configuration, the harder steel sheath will be less likely to elongate during the crimping procedure. In another characterization, additional resistance to elongation can be achieved by increasing the cross-sectional area, e.g., the wall thickness, of the steel sheath.

[0040] **FIGS. 6A** and **6B** illustrate another configuration of a termination arrangement **600** according to the present disclosure. The termination arrangement includes a connector **620** having a connector body **622** and a fastener **626**. The connector body **622** defines a cylindrical space **624** for receiving the strength member **666** therein. A steel sheath **610** having one or more slits **614** is placed over the strength member **666** so that it is disposed between the strength member **666** and the connector body **622**.

[0041] **FIG. 6A** illustrates the termination arrangement **600** in an uncrimped state, e.g., before the connector body **622** is crimped onto the underlying steel sheath **610** and strength member **666**. Before crimping, the connector body has an initial length l_5. **FIG. 6B** illustrates the termination arrangement **600** after crimping the connector body **622** onto the underlying components as is described above. The connector body **622** elongates due to the crimping strain to an expanded length l_6. However, the underlying

steel sheath **610** does not elongate to a substantial degree and therefore does not cause the strength member **666** to elongate to a point that would fracture the strength member **666**. The embodiment illustrated in **FIGS. 6A** and **6B** show that an inner aluminum sleeve (e.g., sleeve **532** in **FIG. 5A**) is not necessary to adequately protect the strength member **666** from the crimping forces and from elongation forces.

[0042] Referring to **FIGS. 7A** to **7E**, one embodiment of a steel sheath **710** is illustrated, e.g., a sheath that may be utilized in the termination arrangements illustrated in **FIGS. 5** and **6**. The sheath **710** has an outer diameter (d_o) and a length (l_7) and includes a bore **712** having an inner diameter (d_i). The inner diameter of the bore **712** is configured (e.g., shaped and sized) to enable a strength member to be inserted into the bore **712**, e.g., to be inserted into the bore **712** through a first end **716a** of the sheath and out a second end **716b** of the sheath. The inner diameter should be sufficiently large to enable the strength member to be inserted through the bore **712** (e.g., with only moderate friction against the sidewall of the bore). However, the diameter of the bore **712** should not be so great that the strength member is able to move axially within the bore when the one or more slits are approaching contact, e.g., are closing. In one characterization, bore **712** has a diameter of at least about 2.5 mm. In another characterization, the bore has a diameter of not greater than about 15 mm.

[0043] The outer diameter d_o of the sheath **710** should be sufficiently large that the sheath may be fit within the cylindrical space defined by the connector body without a significant gap between the sheath and the inner wall of the connector body (**FIG. 6A**), or within the aluminum sleeve (**FIG. 5A**). In one characterization, the outer diameter d_o is at least about 5 mm. In another characterization, the outer diameter d_o is not greater than about 46 mm.

[0044] The length l_7 of the sheath **710** should be long enough to ensure that a sufficient length of the strength member is disposed within the sheath to form a sufficient grip on the strength member after crimping without having points of high stress concentration. For example, the sheath **710** may have a length l_7 of at least about 100 mm. Typically, the length l_7 will not exceed about 300 mm. In another characterization, the sheath **710** has an outer diameter d_o and a length l_7, and the length is at least 10 times greater than

the outer diameter, such as at least about 15 times greater than the outer diameter, such as at least about 20 times greater than the outer diameter. In a further characterization, the length is not greater than about 50 times the outer diameter, such as not greater than about 40 times the outer diameter. However, smaller diameter strength members, e.g., having a diameter of about 3 mm or less, may benefit from the use of a sheath **710** having a length that is near or slightly more than 50 times the outer diameter.

[0045] The sheath **710** also has a wall thickness, e.g., the difference between the outer diameter d_o and the inner diameter d_i of the sheath. The wall thickness of the sheath **710** should be sufficient to limit axial tension forces. In one characterization, the wall thickness of the sheath **710** is at least about 3 mm. In another characterization, the wall thickness of the sheath is not greater than about 20 mm. As is noted above, increasing the wall thickness of the sheath may increase the resistance to elongation.

[0046] As illustrated in **FIGS. 7A** to **7E**, the sheath **710** includes two longitudinally extending slits (e.g., slit **714a**) that are disposed through a first end **716a** of the sheath and extend toward a second end **716b** of the sheath, e.g., without extending through the second end **716b**. These two slits are disposed on opposite sides of the sheath **710**, e.g., at a radial angle of about 180°. The sheath **710** also includes two slits (e.g., slit **714b**) that are disposed through the second end **716b** and extend toward the first end **716a** of the sheath, e.g., without extending through the first end **716a**. These longitudinally extending slits advantageously enable the sheath **710** to accommodate variations in the strength member diameter, and to enable the sheath **710** to resist axial tension forces while providing minimal restriction to closure of the sheath onto the strength member when crimped. Although illustrated as including four longitudinally extending slits, the sheath may include a single slit, two slits, three slits or more. The interior surface of the sheath **710** (e.g., the surface of the bore **712**) may be smooth or may have surface features to enhance the grip of the sheath **710** onto the strength member. For example, the interior surface may have grit applied to the surface or may be machined to provide surface texture, e.g., small ridges on the surface. Further, although not illustrated, the sheath may be slightly tapered from one end to the other, e.g., where the outer diameter of the sheath changes along the length of the sheath.

[0047] **FIGS**. **8A** and **8B** illustrate a schematic cross-sectional view of a termination arrangement **800** according to the present disclosure before placement and crimping of an outer sleeve **840**. **FIGS**. **8C** and **8D** illustrate a schematic cross-sectional view of the termination arrangement **800** after placement of the outer sleeve **840** (**FIG. 8C**) and crimping of the outer sleeve **840** (**FIG. 8D**). The termination arrangement 800 includes a longitudinally-extending steel sheath **810** having a central sheath bore extending therethrough, e.g., from one end of the sheath **816a** through the opposite end **816b** of the sheath. In this manner, an end portion of the strength member **864** is disposed within the sheath **810**.

[0048] A connector **820** (e.g., a steel connector) includes a fastener **826** disposed at a first end of the connector **820** and a connector body **822** that extends from the fastener **826** toward a second end of the connector **820**. The second end of the connector includes an axial bore **824** that is configured (e.g., sized and shaped) to receive and end of the strength member **864**. Thus, as illustrated in **FIG. 8A**, the electrical cable **860** is stripped of a portion of the electrical conductor **862** to expose the underlying strength member **864**. The exposed strength member is then inserted into the sheath **810**, which is placed within the axial bore **824** of the connector **820**. As illustrated in **FIG. 8B**, a portion **828** of the connector body **822**, e.g., the portion including the axial bore **824**, is crimped (e.g., compressed, swaged) onto the sheath **810**, which compresses onto the strength member **864** to secure the connector **820** to the strength member **864**.

[0049] As illustrated in **FIG. 8C**, the outer sleeve **840** can then be placed over the termination arrangement **800** illustrated in **FIG. 8B**. Once the outer sleeve **840** is in place over the termination arrangement **800**, the sleeve **840** may be crimped onto the sub-assembly and the electrical cable **860** as shown in **FIG. 8D**. The outer sleeve **840** is crimped at two locations, namely a first portion **840a** over the electrical cable and a second portion **840b** over the connector body **822**.

[0050] As noted above, the overhead electrical cable **860** may be configured for the transmission and/or distribution of electricity when placed on support towers (e.g., pylons). In one arrangement, the conductor **862** comprises one or more layers of aluminum strands wrapped (e.g., helically wrapped) around the strength member **864**. In

another arrangement, the strength member **864** includes longitudinally-extending reinforcing fibers (e.g., high strength carbon fibers) in a binding matrix (e.g., in an epoxy resin or thermoplastic matrix).

[0051] **FIGS. 9A** to **9D** illustrate an alternative embodiment of a termination arrangement according to the present disclosure. Specifically, **FIGS**. **9A** and **9B** illustrate a perspective view and a cross-sectional view respectively of the termination arrangement **900** before crimping, and **FIGS**. **9C** and **9D** illustrate a cross-sectional view and a perspective view respectively of the termination arrangement **900** after crimping. The termination arrangement **900** includes a longitudinally-extending steel sheath **910** having a central sheath bore **912** extending therethrough, e.g., from one end **916a** (e.g., a distal end) of the sheath through the opposite end **916b** (e.g., a proximal end) of the sheath and at least one or more slits. In this manner, a portion **964b** of the strength member **964** is disposed within the sheath **910**.

[0052] A connector **920** (e.g., a steel connector) includes a fastener **926** disposed at a first end of the connector **920** and a connector body **922** that extends from the fastener **926** toward a second end of the connector **920**. The second end of the connector includes a notch **924** that is configured to receive an end of the strength member **964**. A conductive outer sleeve **940** is disposed over the sheath **910**, e.g., in a position where the outer sleeve **940** can be crimped onto the sheath **910**, e.g., to compress the sheath **910** onto the strength member **964**. As illustrated in **FIGS. 9C** and **9D**, the outer sleeve **940** is crimped along substantially its entire length (e.g., at least about 80% or 90% of its length), such that the outer sleeve **940** is crimped onto the connector body **922** and is crimped onto a portion of the overhead electrical cable **960** in addition to being crimped onto the sheath **910**.

EXAMPLE

[0053] To assess the effectiveness of the termination arrangement according to the present disclosure, two overhead electrical cables including fiber-reinforced composite strength members having a diameter of 7.11 mm are tested during compression swaging (e.g., crimping) of dead-end termination assemblies onto the strength members. One of the termination arrangements is according to the prior art (e.g., as illustrated in **FIGS. 4A**

- 4B), and a second termination arrangement includes a steel sheath (e.g., as illustrated in **FIGS. 6A – 6B**).

[0054] To measure the strain on the strength member during the crimping process, a single optical fiber is placed along the outer surface of each of the two strength members. As illustrated in **FIG. 10**, the optical fiber includes six Fiber Bragg Gratings (FBG), each about 7 mm in length and evenly spaced about 18 mm apart, resulting in a center to center spacing of about 25 mm. The eyebolt of a dead-end is compression swaged (crimped) onto the composite strength members including the FBGs following the same procedure and using the same equipment that is used in a field attachment.

[0055] The strain measured by the FBG's is monitored continuously during the crimping procedure. The numbering sequence of the FBG's was such that FBG #6, which is closest to the eyebolt, is the first to experience crimping forces followed by FBG #5 down to FBG #1. The typical pattern is that FBG #6 does not experience significant levels of axial strain with the subsequent FBG's building up higher levels of axial strain. Modeling of the arrangements indicates that as the radial compaction occurs a substantial amount of plastic deformation also occurs. If this axial deformation is not relieved by slippage of the crimping metal over the composite strength member, the strains may be large enough to exceed the 1.9% maximum elongation of the composite strength member.

[0056] The foregoing testing and analysis finds that a termination arrangement including a steel sheath according to the present disclosure reduces axial strain considerably while allowing full radial compression for gripping of the composite strength member. Specifically, the peak strain in the standard assembly according to the prior art reaches 1.2% in FBG #5, whereas the peak strain in the composite strength member protected by the steel sheath is reduced to 0.52%, with this peak strain also occurring in FBG #5.

[0057] While various embodiments of a termination arrangement and method for terminating an overhead electrical cable have been described in detail, it is apparent that modifications and adaptations of those embodiments will occur to those skilled in the art.

However, it is to be expressly understood that such modifications and adaptations are within the spirit and scope of the present disclosure.

What is Claimed is:

1. A termination arrangement for securing an overhead electrical cable comprising a strength member and an electrical conductor disposed around the strength member, the termination arrangement comprising:

a connector comprising a fastener disposed at a first end of the connector and a connector body extending from the fastener toward an end of the connector that lies opposite the fastener;

a longitudinally-extending sheath having a central bore extending therethrough that is configured to receive a strength member within the central bore; and

a conductive sleeve configured to be disposed over: (i) an end of the electrical cable, (ii) the sheath, and (iii) at least a portion of the connector body when the termination arrangement is operatively assembled.

2. The termination arrangement recited in Claim 1, wherein the connector is formed from steel.

3. The termination arrangement recited in any one of Claims 1 to 2, wherein the sheath is fabricated from steel.

4. The termination arrangement recited in any one of Claims 1 to 3, wherein the central bore has a substantially circular cross-section.

5. The termination arrangement recited in any one of Claims 1 to 4, wherein the central bore has a bore surface that is substantially smooth.

6. The termination arrangement recited in any one of Claims 1 to 4, wherein the central bore has a bore surface comprising surface features that are configured to improve the grip of the sheath onto the strength member when the sheath is operatively placed over the strength member.

7. The termination arrangement recited in Claim 6, wherein the surface features are selected from surface grit and surface scoring.

8. The termination arrangement recited in any one of Claims 1 to 7, wherein the steel sheath has an outer diameter and a length, and wherein the length is at least 20 times greater than the outer diameter.

9. The termination arrangement recited in any one of Claims 1 to 8, wherein the sheath has an outer diameter and a length, and wherein the length is not greater than about 30 times greater than the outer diameter.

10. The termination arrangement recited in any one of Claims 1 to 9, wherein the sheath comprises at least a first longitudinal slit through a first end of the sheath and extending toward a second end of the sheath.

11. The termination arrangement recited in Claim 10, wherein the sheath comprises at least a second longitudinal slit through the second end of the sheath and extending toward the first end of the sheath.

12. The termination arrangement recited in Claim 11, wherein the sheath comprises at least a third longitudinal slit through the first end of the sheath and extending toward the second end of the sheath.

13. The termination arrangement recited in Claim 12, wherein the steel sheath comprises at least a fourth longitudinal slit through the second end of the sheath and extending toward the first end of the sheath.

14. The termination arrangement recited in any one of Claims 11 to 13, wherein the slits are disposed around the sheath in a substantially equidistant manner.

15. The termination arrangement recited in Claim 13, wherein the slits are disposed around the sheath at about 90° from adjacent slits.

16. The termination arrangement recited in any one of Claims 1 to 15, wherein the connector body comprises a longitudinally-extending internal chamber that is accessible through a chamber inlet, where the internal chamber is configured to receive the steel sheath therein when the termination arrangement is operatively assembled.

17. The termination arrangement recited in Claim 16, further comprising an aluminum sleeve that is configured to be disposed in the internal chamber and between

the chamber wall and the steel sheath when the termination arrangement is operatively assembled.

18. The termination arrangement recited in any one of Claims 1 to 17, wherein the conductive sleeve is configured to operatively receive the steel sheath therein when the termination arrangement is operatively assembled.

19. The termination arrangement recited in any one of Claims 1 to 18, wherein the conductive sleeve is formed from aluminum.

20. A termination arrangement secured to an overhead electrical cable comprising a strength member and an electrical conductor disposed around the strength member, the termination arrangement comprising:

a connector comprising a fastener disposed at a first end of the connector and a connector body extending from the fastener toward an end of the connector that lies opposite the fastener;

a longitudinally-extending sheath having a central bore extending therethrough that is operatively disposed over and compressed onto a portion of the strength member to operatively grip the strength member; and

a conductive sleeve that is disposed over (i) an end of the electrical cable, (ii) the sheath, and (iii) at least a portion of the connector body;

wherein the sheath is operatively attached to the connector body by one of;

(i) being disposed within a chamber in the connector body and having the connector body crimped onto the sheath; or

(ii) being disposed within the conductive sleeve and having the conductive sleeve crimped onto the sheath.

21. The termination arrangement recited in Claim 20, wherein the strength member comprises longitudinally-extending reinforcing fibers in a binding matrix.

22. The termination arrangement recited in Claim 21, wherein the reinforcing fibers comprise fibers selected from the group consisting of carbon fibers, glass fibers, ceramic fibers and combinations thereof.

23. The termination arrangement recited in any one of Claims 21 or 22, wherein the binding matrix comprises a material selected from an epoxy resin, a thermoplastic resin and a metal.

24. The termination arrangement recited in any one of Claims 20 to 23, wherein the connector is formed from steel.

25. The termination arrangement recited in any one of Claims 20 to 24, wherein the sheath is formed from a material selected from the group consisting of steel and a fiber-reinforced composite.

26. The termination arrangement recited in any one of Claims 20 to 25, wherein the sheath comprises at least a first longitudinally extending slit through a first end of the sheath and toward a second end of the sheath.

27. The termination arrangement recited in Claim 26, wherein the sheath comprises at least a second longitudinally extending slit through the second end of the sheath and toward the first end of the sheath.

28. The termination arrangement recited in any one of Claims 20 to 27, wherein the sheath is operatively attached to the connector body by being disposed within a chamber in the connector body and having the connector body crimped onto the sheath.

29. The termination arrangement recited in Claim 28, wherein an aluminum sleeve is disposed between the connector body and the sheath.

30. The termination arrangement recited in any one of Claims 28 or 29, wherein the connector body is crimped onto the sheath along substantially the entire length of the sheath.

31. The termination arrangement recited in any one of Claims 20 to 27, wherein the sheath is operatively attached to the connector body by being disposed within the conductive sleeve and having the conductive sleeve crimped onto the stel sheath.

32. The termination arrangement recited in Claim 31, wherein the conductive sleeve is formed from aluminum.

33. The termination arrangement recited in any one of Claims 31 to 32, wherein the conductive sleeve is crimped onto the sheath along substantially the entire length of the sheath.

34. The termination arrangement recited in any one of Claims 31 to 33, wherein the conductive sleeve is attached to the connector body by crimping the conductive sleeve onto the connector body.

35. The termination arrangement recited in any one of Claims 20 to 34, wherein the termination arrangement is secured to an overhead electrical cable.

36. A method for the termination of an overhead electrical cable comprising a strength member and an electrical conductor disposed around the strength member, the method comprising the steps of:

removing the electrical conductor from a termination end of the electrical cable to expose an end portion of the strength member;

placing the exposed end portion of the strength member through a central bore disposed within a longitudinally extending sheath;

operatively attaching the sheath to a connector, the connector comprising a fastener disposed at a first end of the connector and a connector body extending from the fastener toward an end of the connector that lies opposite the fastener, the attaching comprising one of;

(i) disposing the sheath within a chamber in the connector body and crimping the connector body onto the steel sheath, or

(ii) disposing the sheath within a conduit of a conductive sleeve and crimping the conductive sleeve onto the sheath.

37. The method recited in Claim 36, wherein the strength member comprises longitudinally-extending reinforcing fibers in a binding matrix.

38. The method recited in Claim 37, wherein the reinforcing fibers comprise fibers selected from the group consisting of carbon fibers, glass fibers, ceramic fibers and combinations thereof.

39. The method recited in any one of Claims 37 or 38, wherein the binding matrix comprises a material selected from the group consisting of an epoxy resin, a thermoplastic resin and a metal.

40. The method recited in any one of Claims 36 to 39, wherein the connector is formed from steel.

41. The method recited in any one of Claims 36 to 40, wherein the sheath is formed from steel.

42. The method recited in any one of Claims 36 to 41, wherein the sheath comprises at least a first longitudinally extending slit through a first end of the sheath and toward a second end of the sheath.

43. The method recited in Claim 42, wherein the sheath comprises at least a second longitudinally extending slit through the second end of the sheath and toward the first end of the sheath.

44. The method recited in any one of Claims 36 to 43, wherein the step of operatively attaching the sheath to the connector body comprises disposing the sheath within a chamber in the connector body and crimping the connector body onto the steel sheath.

45. The method recited in Claim 44, wherein an aluminum sleeve is disposed between the connector body and the sheath prior to crimping the connector body onto the sheath.

46. The method recited in any one of Claims 44 or 45, wherein the connector body is crimped onto the sheath along substantially the entire length of the sheath.

47. The method recited in any one of Claims 44 to 46, further comprising the step of placing a conductive sleeve over the connector body and sheath, and crimping the conductive sleeve onto the connector body.

48. The method recited in any one of Claims 36 to 43, wherein the step of operatively attaching the sheath to the connector body comprises disposing the stel sheath within the conductive sleeve and crimping the conductive sleeve onto the sheath.

49. The method recited in Claim 48, wherein the conductive sleeve is formed from aluminum.

50. The method recited in any one of Claims 48 to 49, wherein the conductive sleeve is crimped onto the steel sheath along substantially the entire length of the sheath.

51. The method recited in any one of Claims 48 to 50, wherein the conductive sleeve is attached to the connector body by crimping the conductive sleeve onto the connector body.

52. The method secured to an overhead electrical cable as recited in any one of Claims 36 to 51, wherein the termination arrangement is selected from a termination arrangement as recited in any one of Claims 1 to 19.

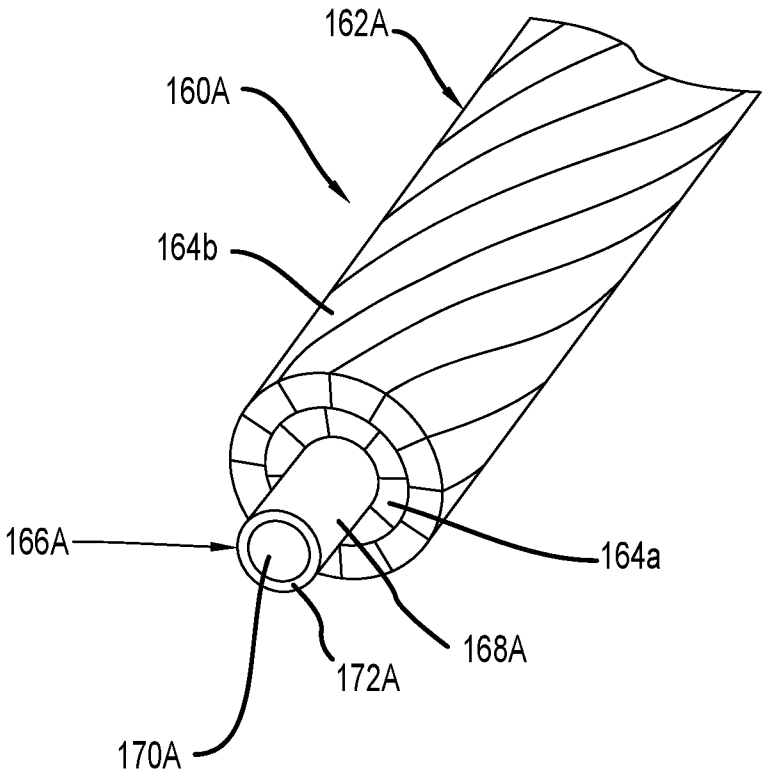

FIG.1A

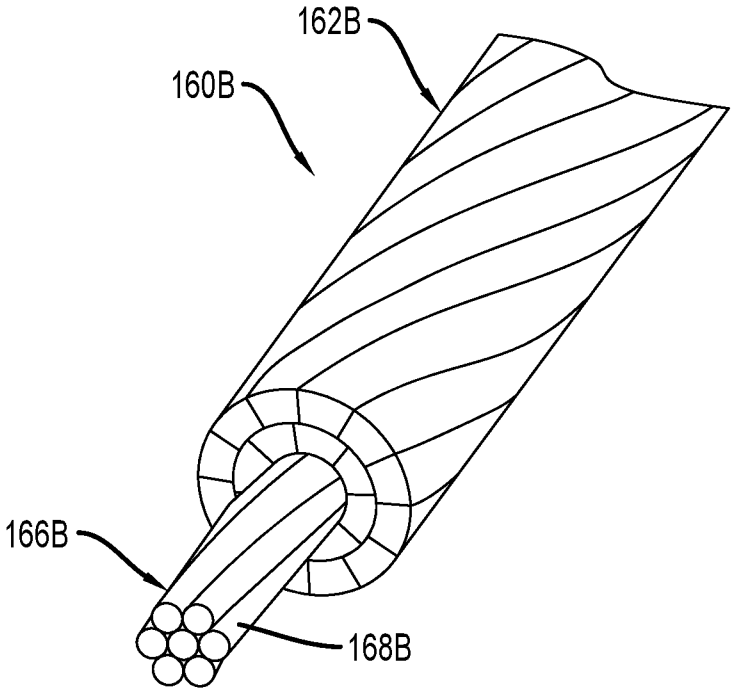

FIG.1B

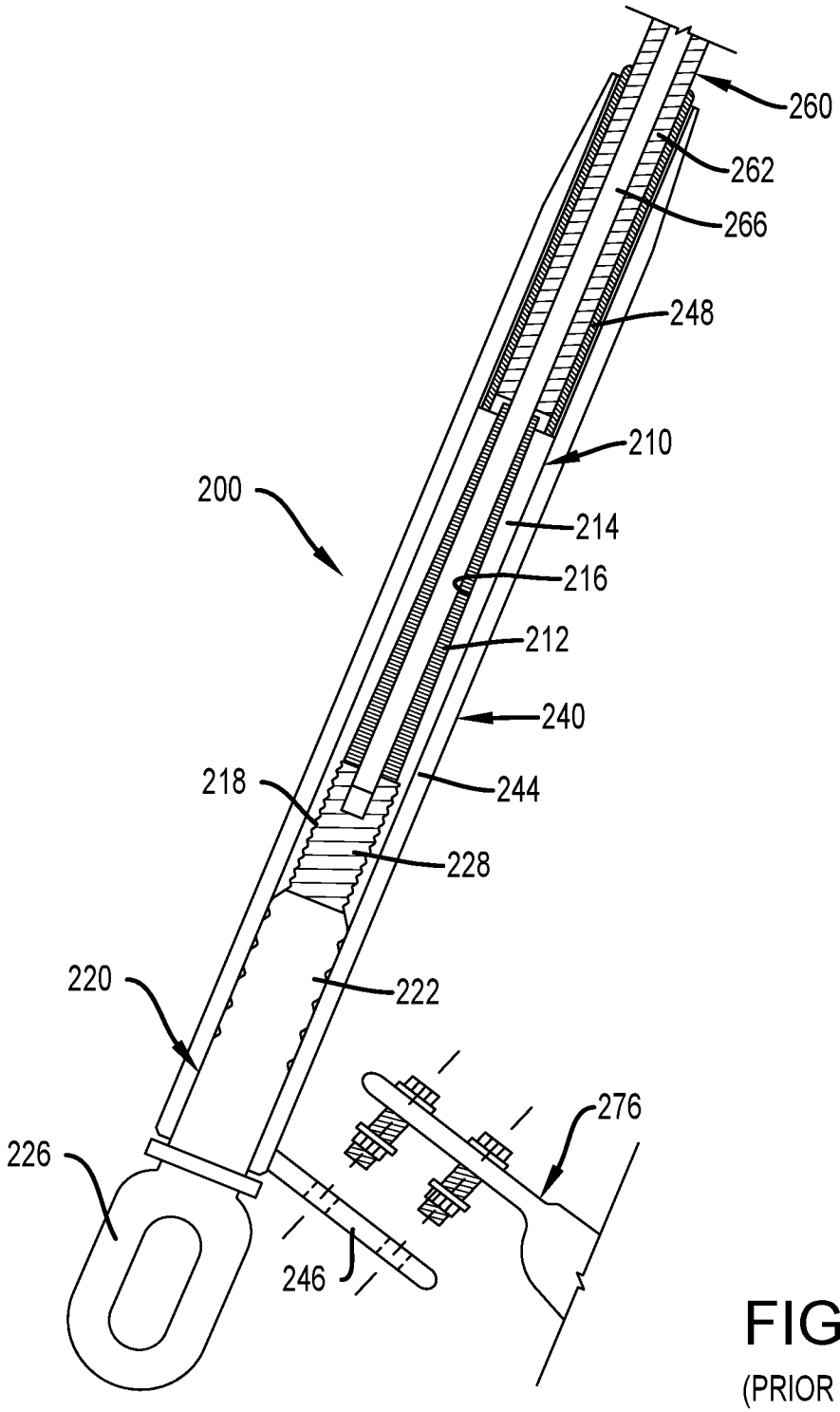

FIG.2
(PRIOR ART)

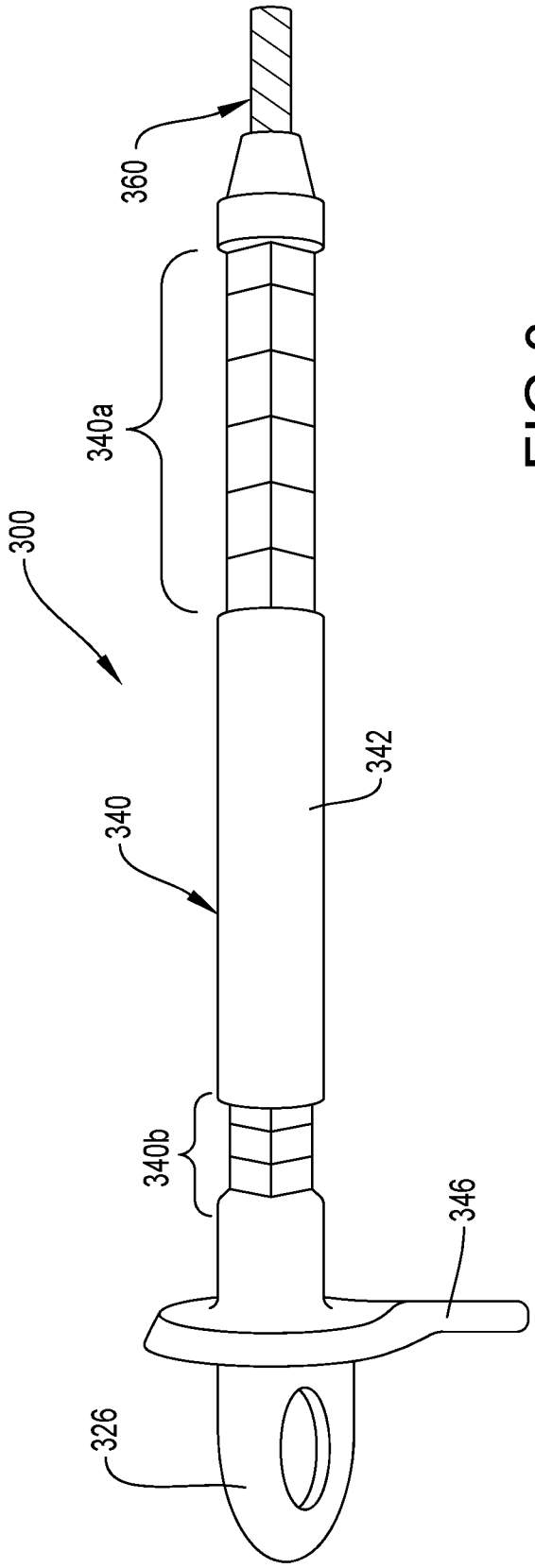

FIG.3
(PRIOR ART)

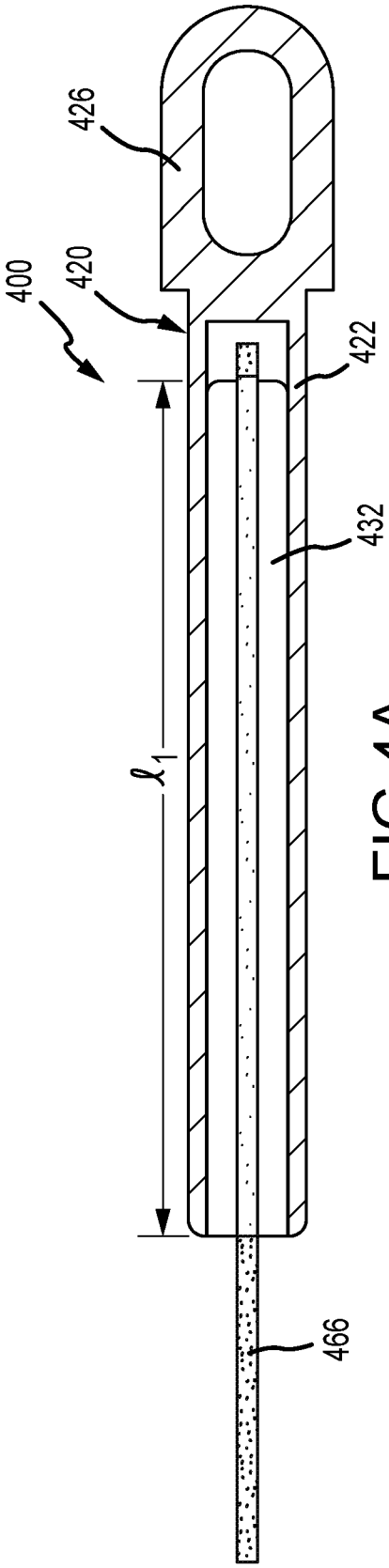

FIG.4A
(PRIOR ART)

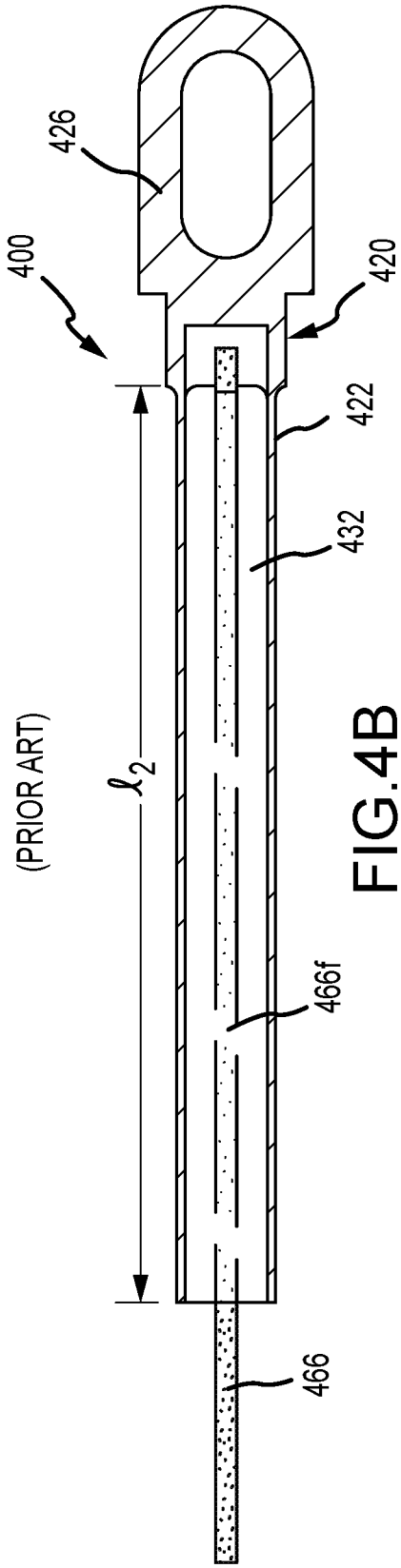

FIG.4B
(PRIOR ART)

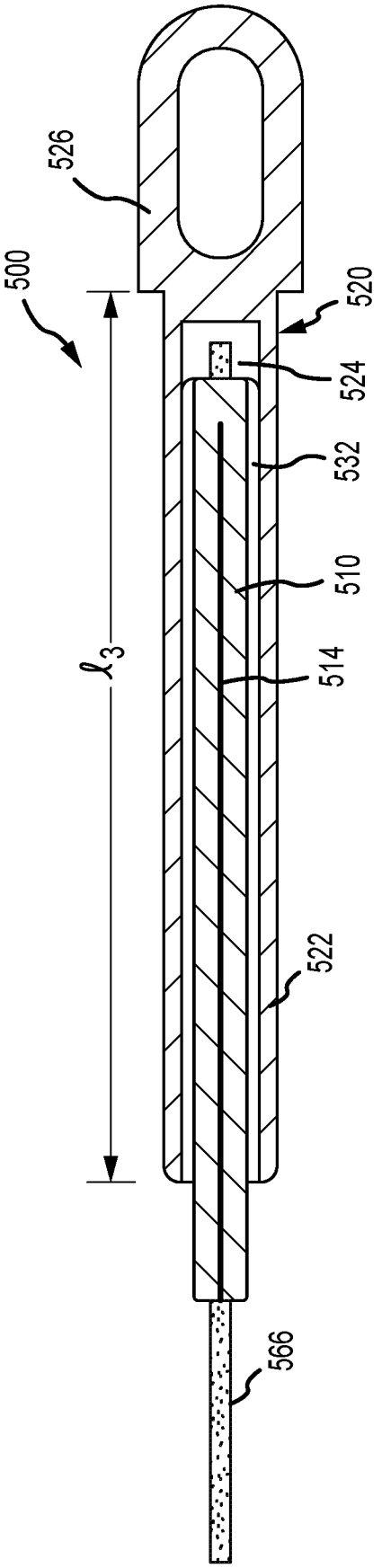
526
500
520
524
532
510
514
ℓ_3
522
566

FIG.5A

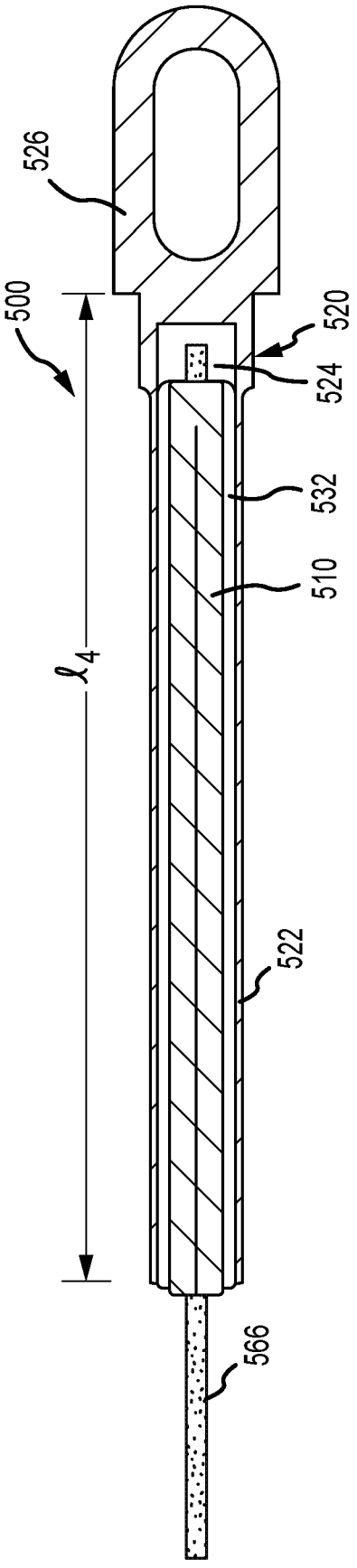
526
500
520
524
532
510
ℓ_4
522
566

FIG.5B

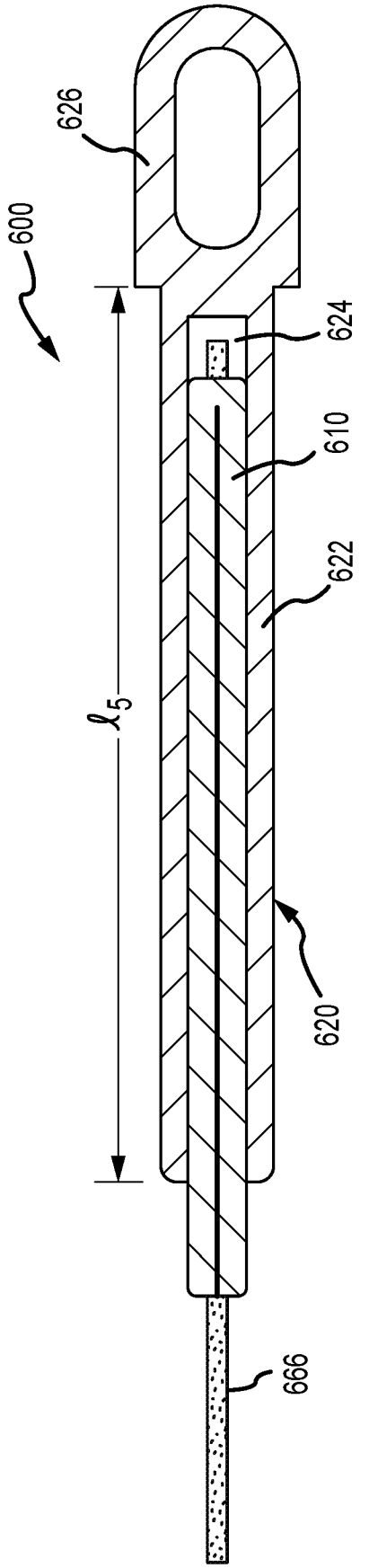
626
600
624
610
622
ℓ_5
620
666

FIG.6A

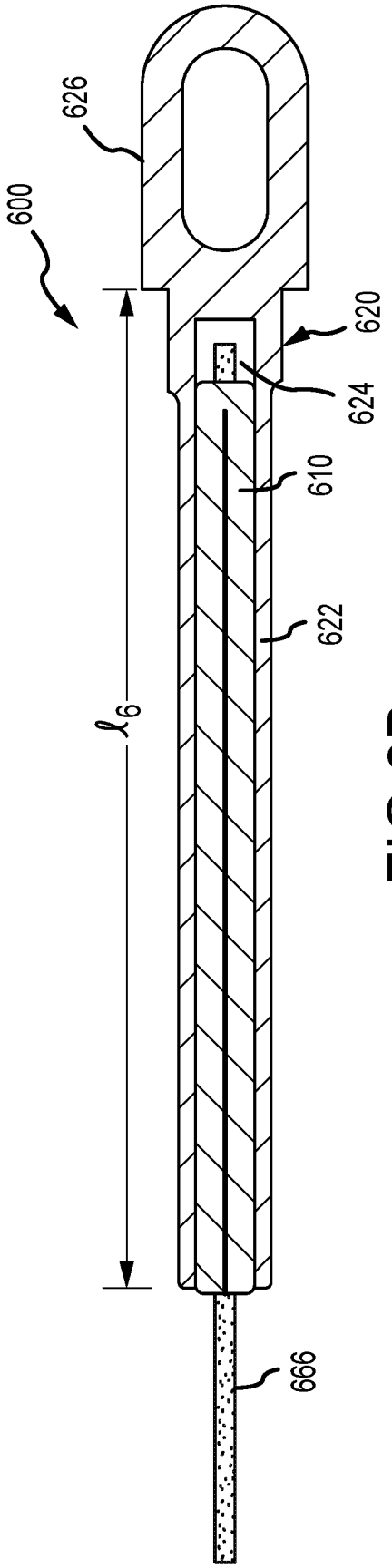
626
600
620
624
610
622
ℓ_6
666

FIG.6B

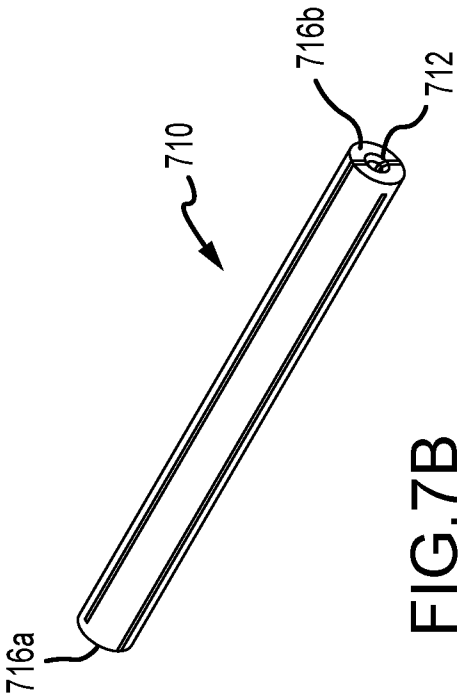

FIG.7B

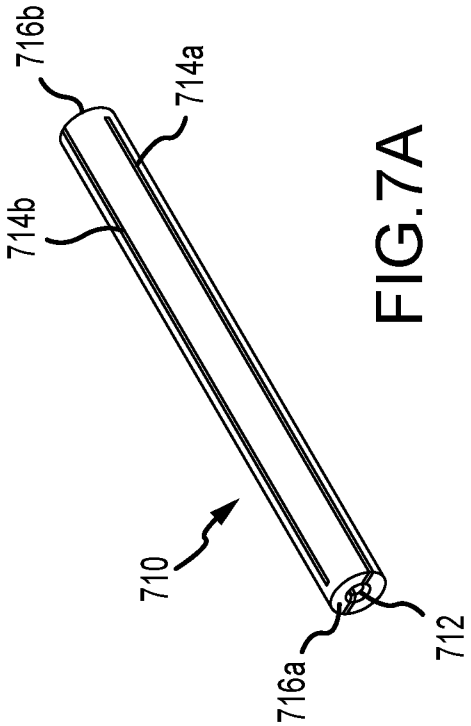

FIG.7A

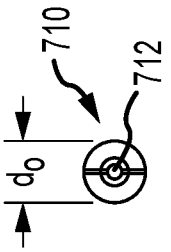

FIG.7E

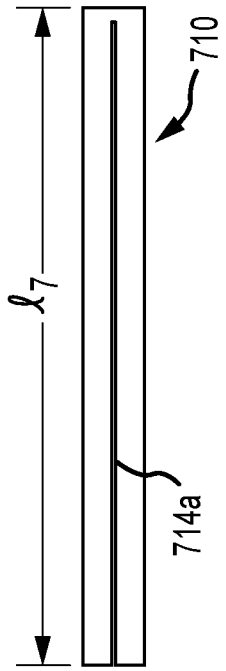

FIG.7C

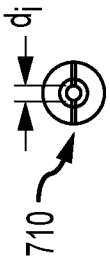

FIG.7D

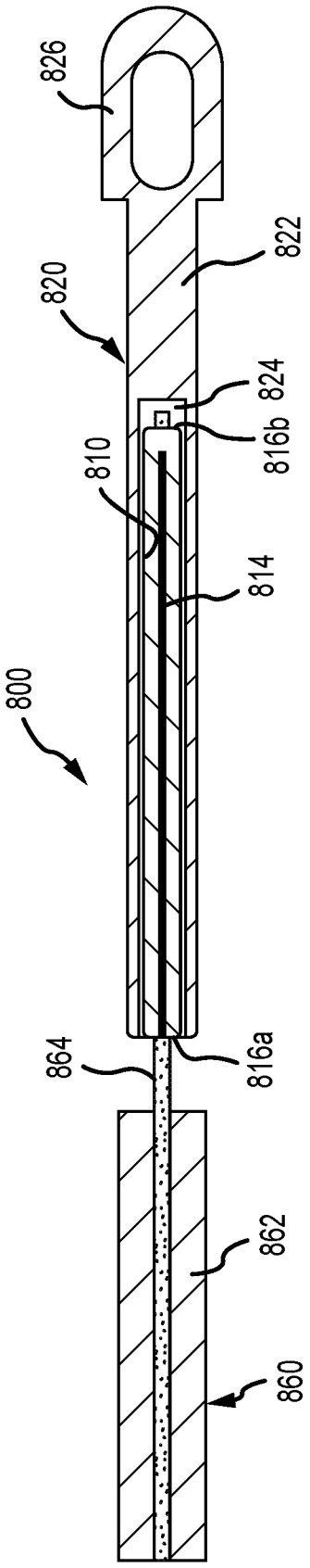
826
822
820
824
816b
810
814
800
864
816a
862
860

FIG.8A

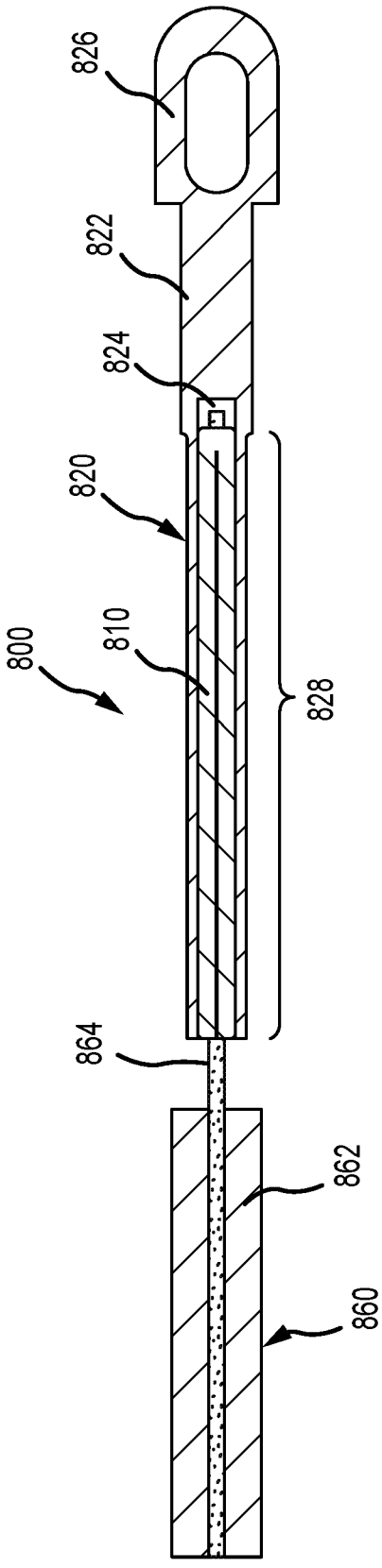
826
822
824
820
810
800
828
864
862
860

FIG.8B

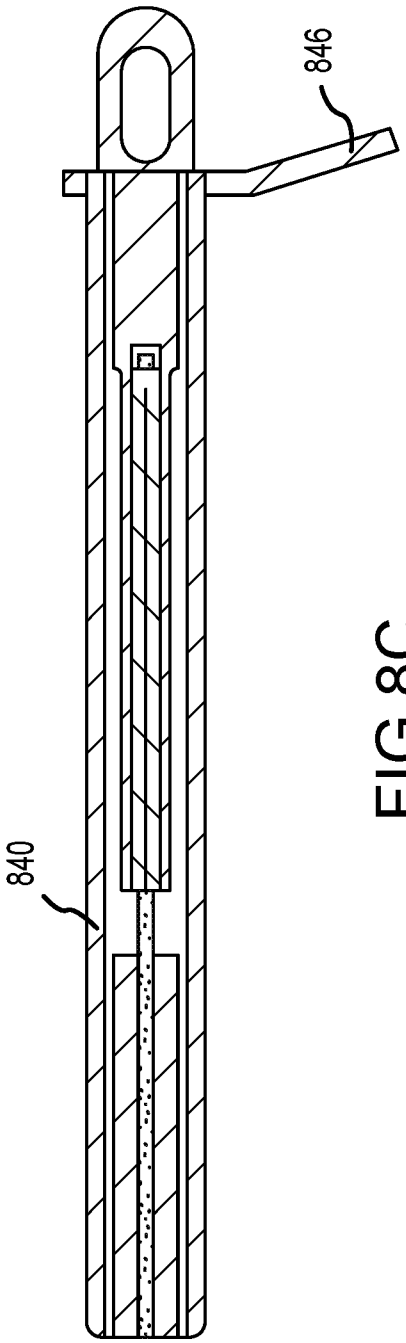

FIG.8C

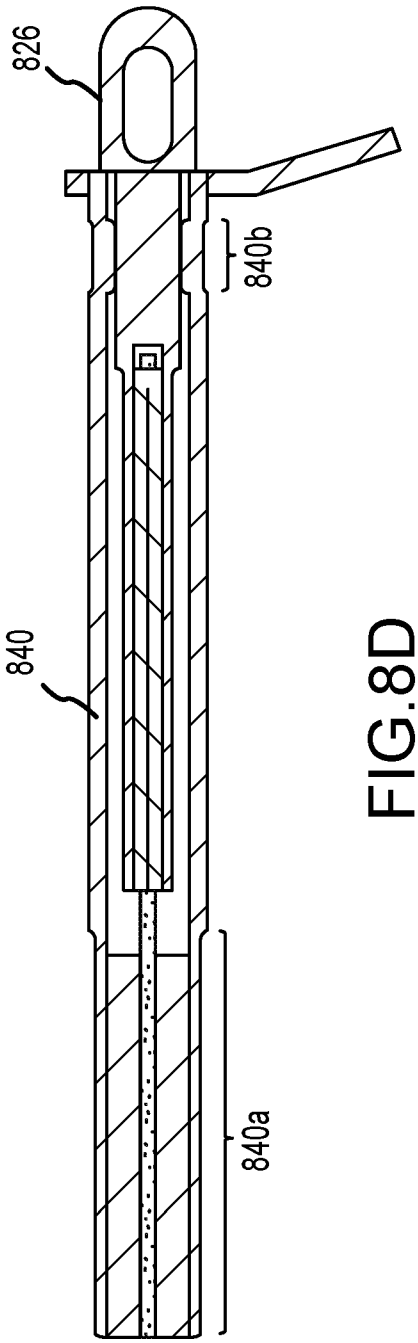

FIG.8D

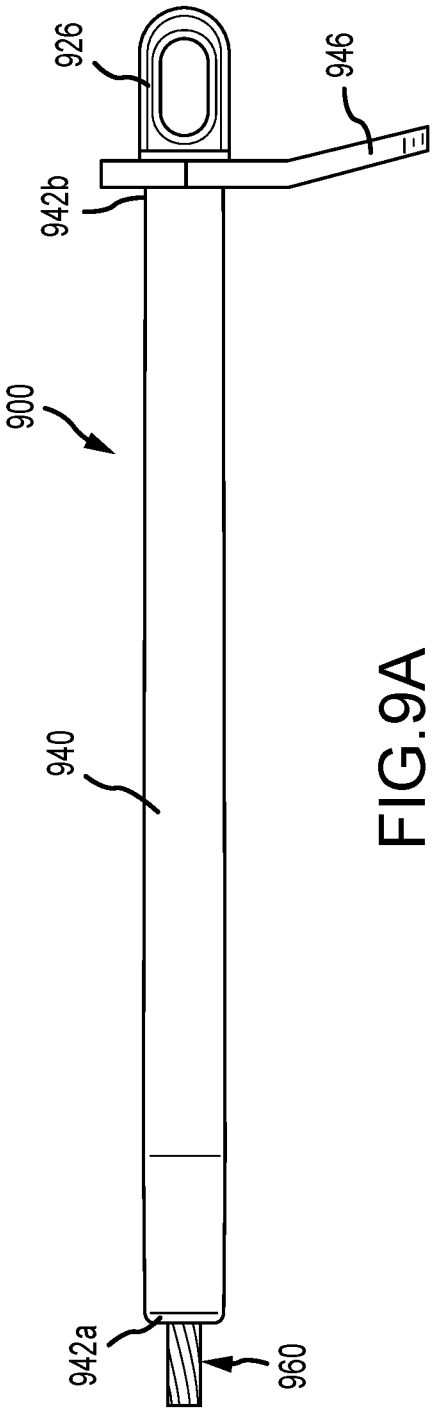
926
946
942b
900
940
942a
960

FIG.9A

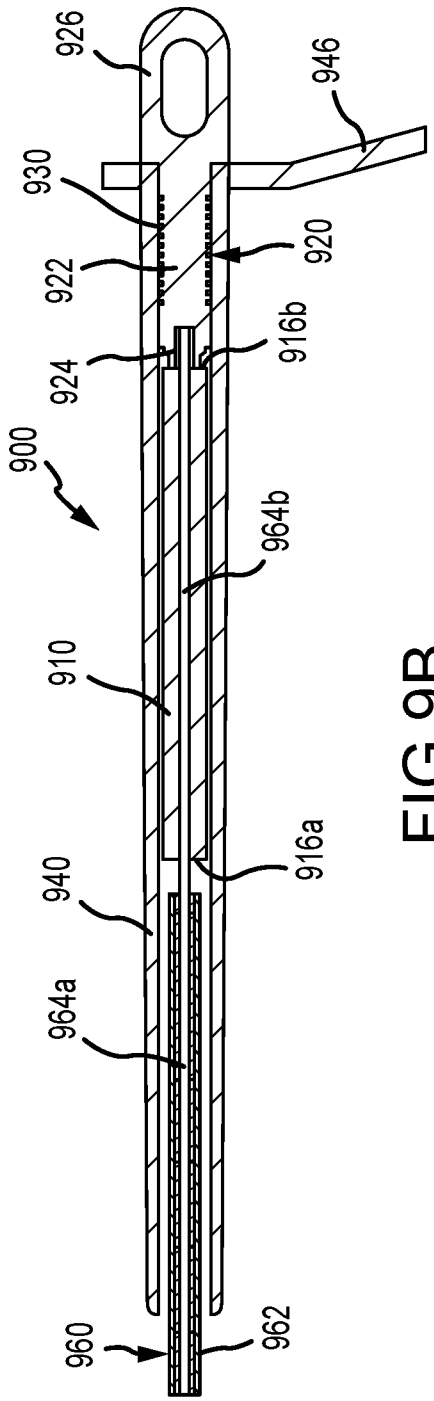
926
946
930
920
922
916b
924
900
964b
910
916a
940
964a
960
962

FIG.9B

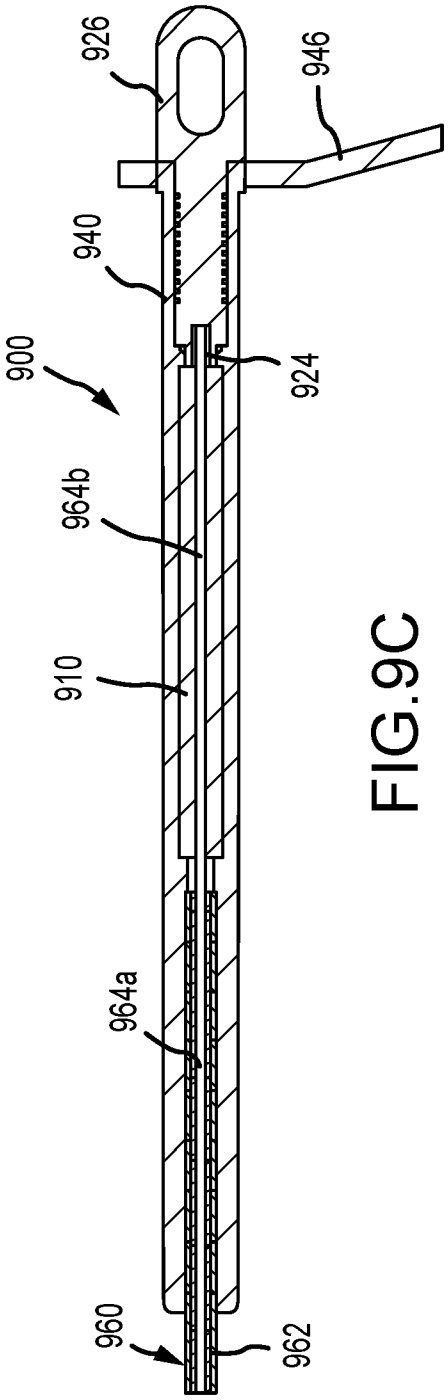

FIG.9C

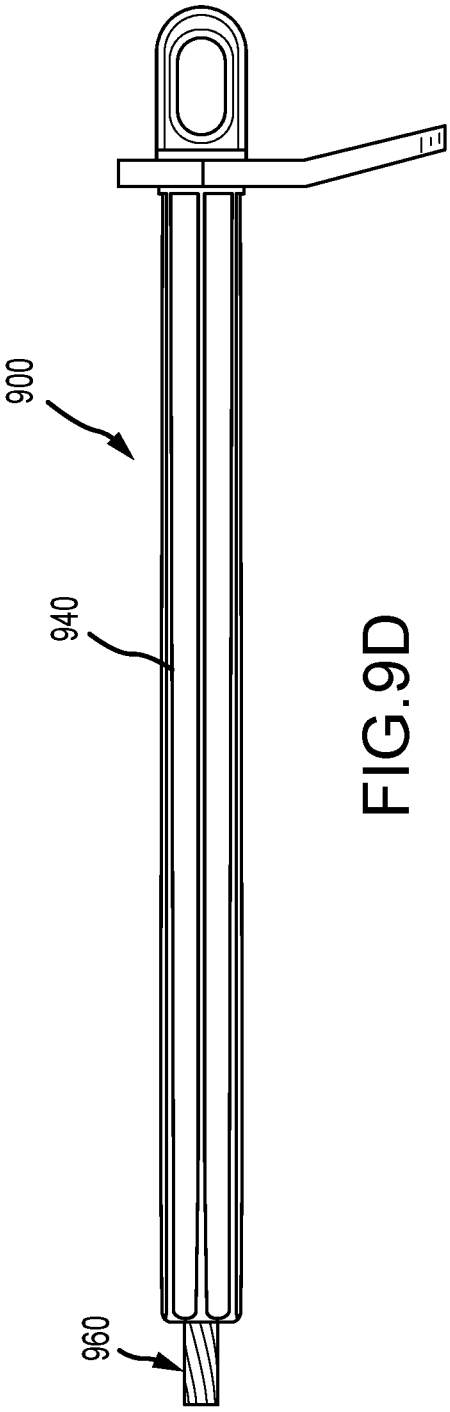

FIG.9D

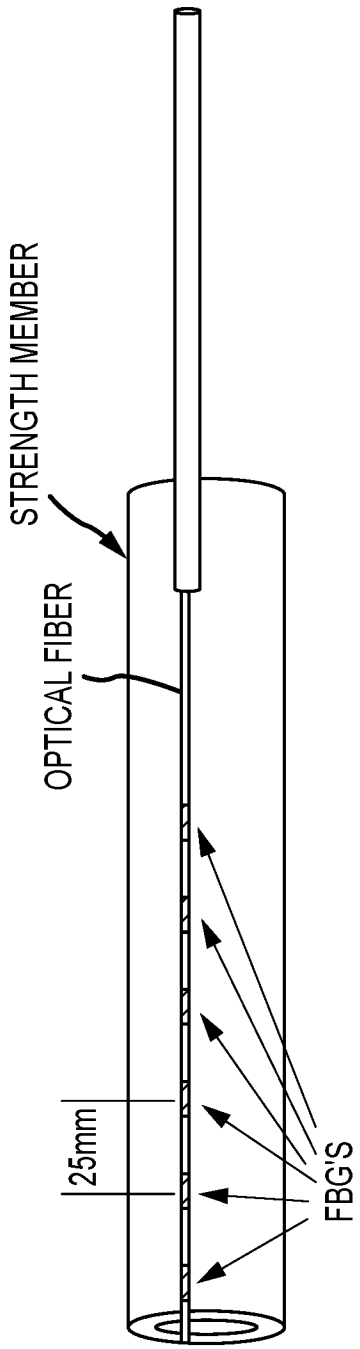

FIG.10

INTERNATIONAL SEARCH REPORT

International application No.
PCT/US2021/033499

A. CLASSIFICATION OF SUBJECT MATTER

H02G 15/06(2006.01)i; **H02G 7/05**(2006.01)i; **H01R 13/627**(2006.01)i; **H01R 11/12**(2006.01)i; **H01B 7/18**(2006.01)i

According to International Patent Classification (IPC) or to both national classification and IPC

B. FIELDS SEARCHED

Minimum documentation searched (classification system followed by classification symbols)

H02G 15/06(2006.01); B32B 15/04(2006.01); B32B 27/04(2006.01); G02B 6/255(2006.01); H01R 4/20(2006.01); H02G 15/08(2006.01); H02G 7/02(2006.01); H02G 7/05(2006.01)

Documentation searched other than minimum documentation to the extent that such documents are included in the fields searched

Korean utility models and applications for utility models
Japanese utility models and applications for utility models

Electronic data base consulted during the international search (name of data base and, where practicable, search terms used)

eKOMPASS(KIPO internal) & Keywords: termination arrangement, overhead electrical cable, strength member, connector body, sheath, conductive sleeve, steel

C. DOCUMENTS CONSIDERED TO BE RELEVANT

Category*	Citation of document, with indication, where appropriate, of the relevant passages	Relevant to claim No.
A	WO 2019-147838 A1 (CTC GLOBAL CORPORATION) 01 August 2019 (2019-08-01) Paragraphs [0037]-[0056]; claims 1, 35; and figures 4A-7	1-52
A	US 2012-0305312 A1 (COLIN MCCULLOUGH et al.) 06 December 2012 (2012-12-06) Paragraphs [0075]-[0127]; and figures 2-7	1-52
A	US 2017-0288383 A1 (AFL TELECOMMUNICATIONS LLC) 05 October 2017 (2017-10-05) Paragraphs [0027]-[0048]; and figures 1-4	1-52
A	WO 2015-170389 A1 (TOKYO ROPE MFG. CO., LTD.) 12 November 2015 (2015-11-12) Paragraphs [0013]-[0053]; and figures 1-7	1-52
A	US 6805596 B2 (WAYNE L. QUESNEL et al.) 19 October 2004 (2004-10-19) Columns 4-6; and figures 7-8	1-52

☐ Further documents are listed in the continuation of Box C. ☑ See patent family annex.

* Special categories of cited documents:
"A" document defining the general state of the art which is not considered to be of particular relevance
"D" document cited by the applicant in the international application
"E" earlier application or patent but published on or after the international filing date
"L" document which may throw doubts on priority claim(s) or which is cited to establish the publication date of another citation or other special reason (as specified)
"O" document referring to an oral disclosure, use, exhibition or other means
"P" document published prior to the international filing date but later than the priority date claimed
"T" later document published after the international filing date or priority date and not in conflict with the application but cited to understand the principle or theory underlying the invention
"X" document of particular relevance; the claimed invention cannot be considered novel or cannot be considered to involve an inventive step when the document is taken alone
"Y" document of particular relevance; the claimed invention cannot be considered to involve an inventive step when the document is combined with one or more other such documents, such combination being obvious to a person skilled in the art
"&" document member of the same patent family

Date of the actual completion of the international search	Date of mailing of the international search report
17 September 2021	**17 September 2021**

Name and mailing address of the ISA/KR	Authorized officer
Korean Intellectual Property Office **189 Cheongsa-ro, Seo-gu, Daejeon** **35208, Republic of Korea**	**PARK, Hye Lyun**
Facsimile No. **+82-42-481-8578**	Telephone No. **+82-42-481-3463**

INTERNATIONAL SEARCH REPORT
Information on patent family members

International application No.
PCT/US2021/033499

Patent document cited in search report	Publication date (day/month/year)	Patent family member(s)	Publication date (day/month/year)
WO 2019-147838 A1	01 August 2019	AU 2019-212363 A1	13 August 2020
		BR 112020015181 A2	26 January 2021
		CA 3088407 A1	01 August 2019
		CL 2020001952 A1	04 December 2020
		CN 112041160 A	04 December 2020
		EA 202091770 A1	16 October 2020
		EP 3743273 A1	02 December 2020
		JP 2021-512583 A	13 May 2021
		KR 10-2020-0111220 A	28 September 2020
		PH 12020551129 A1	31 May 2021
		US 2020-0194989 A1	18 June 2020
		US 2020-0343711 A1	29 October 2020
		WO 2021-016569 A2	28 January 2021
		WO 2021-016569 A3	04 March 2021
US 2012-0305312 A1	06 December 2012	BR 112012020473 A2	11 September 2018
		CA 2790001 A1	25 August 2011
		CN 102782943 A	14 November 2012
		EP 2537207 A1	26 December 2012
		EP 2537207 B1	17 October 2018
		JP 2013-520769 A	06 June 2013
		JP 5722920 B2	27 May 2015
		KR 10-1750131 B1	22 June 2017
		KR 10-2012-0138763 A	26 December 2012
		RU 2012-134996 A	27 March 2014
		RU 2537967 C2	10 January 2015
		US 8895856 B2	25 November 2014
		WO 2011-103036 A1	25 August 2011
US 2017-0288383 A1	05 October 2017	WO 2017-176570 A1	12 October 2017
WO 2015-170389 A1	12 November 2015	JP 6201042 B2	20 September 2017
US 6805596 B2	19 October 2004	US 2003-194916 A1	16 October 2003