United States Patent [19]

Lingo, Jr.

[11] **3,826,223**

[45] **July 30, 1974**

[54] **HALYARD SILENCING CLASP**

[75] Inventor: **John E. Lingo, Jr.**, Willingboro, N.J.

[73] Assignee: **Lingo, Inc.**, Camden, N.J.

[22] Filed: **Apr. 19, 1973**

[21] Appl. No.: **352,497**

Related U.S. Application Data

[63] Continuation-in-part of Ser. No. 276,713, July 31, 1972, abandoned.

[52] **U.S. Cl.** **116/174,** 24/232, 114/114

[51] **Int. Cl.** **G09f 17/00**

[58] **Field of Search** ..... 116/173, 174, 175; 24/239, 24/241 PP, 232; D38/19; 114/109, 110, 111, 112, 113, 114

[56] **References Cited**

UNITED STATES PATENTS

44,582	10/1864	Balans	114/114
549,096	11/1895	Baker	24/232
1,048,291	12/1912	Buckley	116/174
1,338,210	4/1920	Buckley	116/173
1,754,043	4/1930	Port	24/232
2,476,403	7/1949	Cook	114/108
2,493,855	1/1950	Bucks	116/173
3,599,298	8/1971	Anderson	24/232

Primary Examiner—Louis J. Capozi

Attorney, Agent, or Firm—Charles F. Duffield

[57] **ABSTRACT**

A flag clasp for silencing a flagpole halyard in windy conditions which includes a clew which is secured to the flag clasp. The clew encircles the inner halyard run and may be formed integral with the clasp at the point where the halyard is tied off. The clasp is formed of two substantially flat body members which are journaled together by a hollow axle through which the outer halyard is tied. Each body member terminates in oppositely directed hooks which provide an opening eye for securing the flag. Any lateral movement of the outside halyard, by reason of wind or the like, will result in the inside halyard's movement with the outside halyard rather than in the opposite direction in which it contacts the flagpole creating a noise condition.

3 Claims, 4 Drawing Figures

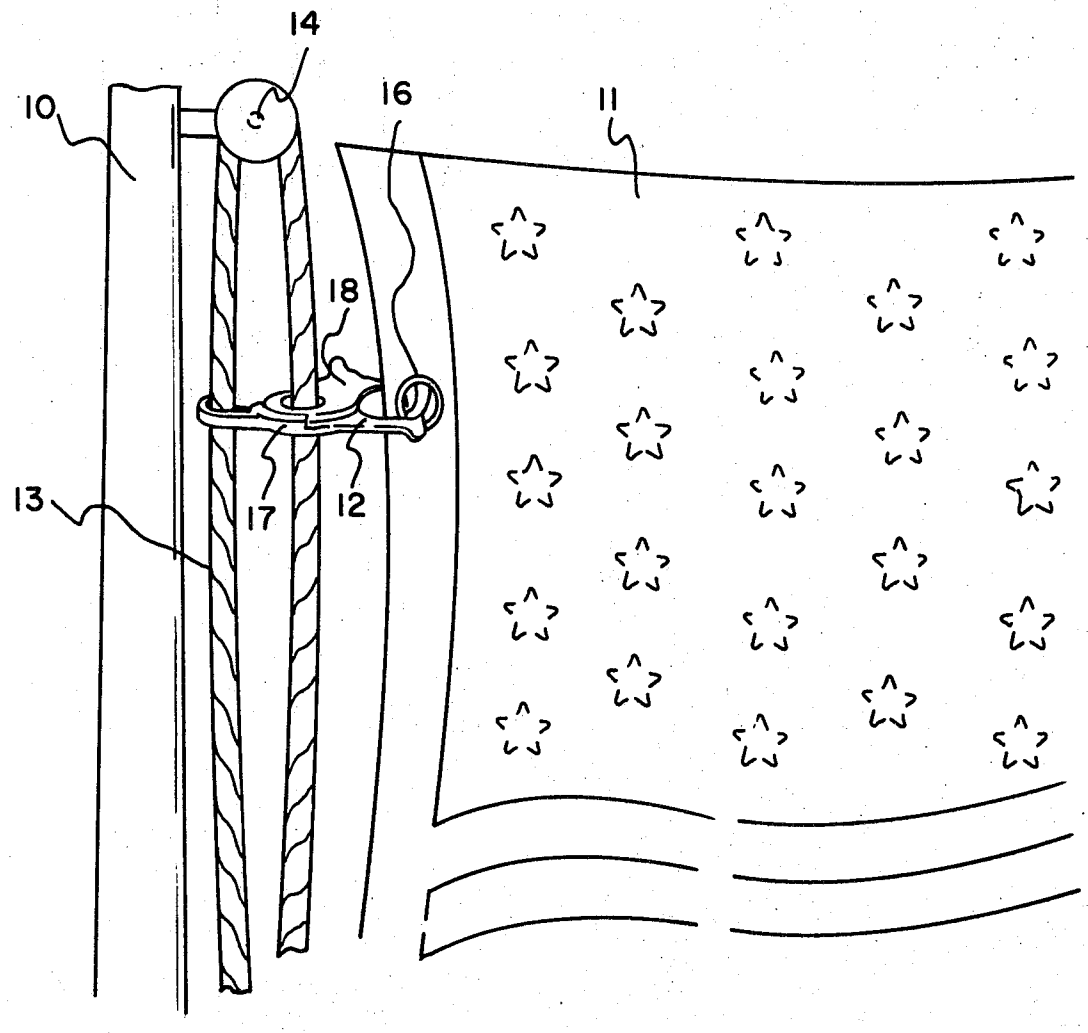

Fig. 1

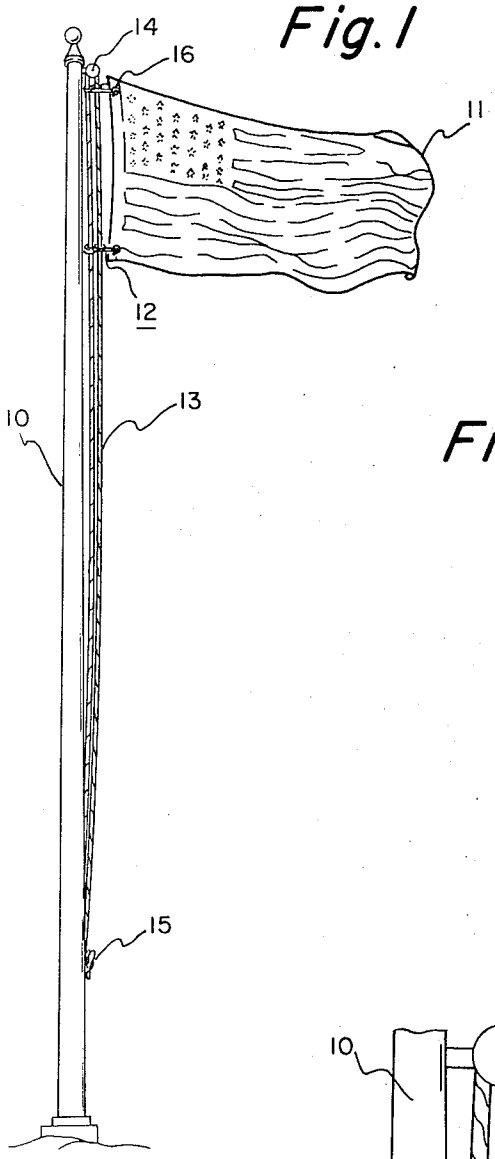

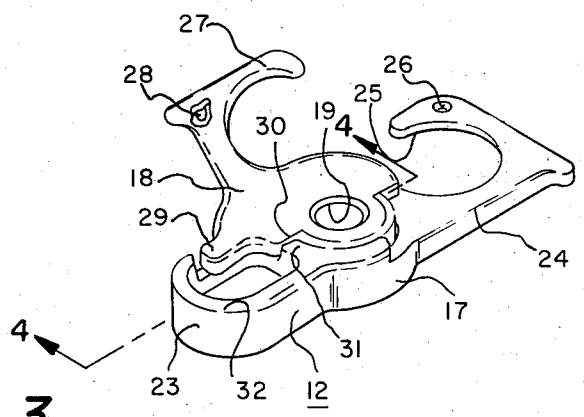

Fig. 3

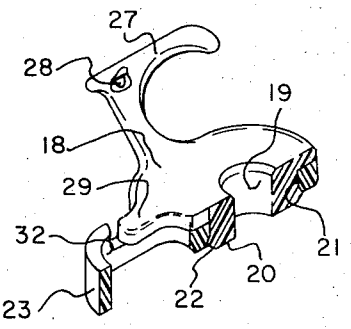

Fig. 4

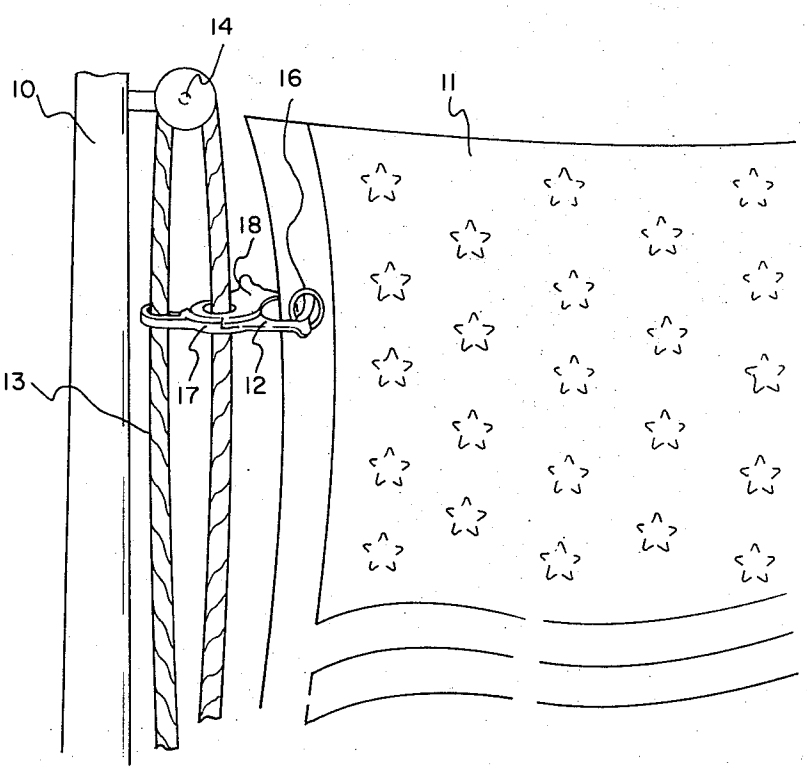

Fig. 2

HALYARD SILENCING CLASP

This application is a continuation-in-part of application Ser. No. 276,713, filed July 31, 1972, now abandoned.

BACKGROUND AND INVENTION

The present invention concerns flagpole riggings, and, more specifically, to a halyard silencing clasp including a clew.

A conventional flagpole employs a halyard pulley at the top of the pole and a cleat at the bottom. A halyard is suspended over the halyard pulley and forms an inner and outer halyard run between the cleat and the pulley.

Generally, two clasps are employed on the outside halyard run and are secured to the halyard by a knot through a loop at the end of the clasp. A flag is then secured to the clasps in a conventional manner.

Under windy conditions, the flag will pull the outer halyard run away from the pole. As this occurs, the inner halyard run will be pulled taut and slap against the side of the pole creating a noise condition. This is especially true with hollow metal flagpoles which are in common use.

OBJECT AND SUMMARY OF INVENTION

It is the object of the present invention to provide an improved halyard clasp and included clew which will eliminate noisy contact of the inner halyard with the flagpole.

The foregoing object is carried out by the present invention in the utilization of a clasp which includes a clew which may be formed integral with the body of the clasp. The clasp includes two substantially flat body members journaled together by a hollow axle and each terminating in oppositely directed hook portions to form an opening securint eye. In use, the clew encircles the inner halyard securing while the outer halyard run is tied off through the hollow axle. As the outer halyard run is drawn taut in windy conditions, the inner halyard run is also pulled outwardly with the outer halyard run and eliminates the noise of the inner halyard run's contact with the flagpole.

Other objects and advantages of the present invention will become apparent to those skilled in the art from the detailed description of the invention which follows taken in conjunction with the drawing.

DESCRIPTION OF DRAWING

FIG. **1** is a perspective view of an entire flagpole and rigging employing the halyard silencing clasp of the present invention;

FIG. **2** is an enlarged view of the upper portion of the flagpole of FIG. **1** illustrating the halyard silencing clasp of the present invention in use;

FIG. **3** is a perspective view of the halyard silencing clasp of the present invention in open position; and

FIG. **4** is a perspective cut away view of the clasp shown in FIG. **3.**

DETAILED DESCRIPTION OF INVENTION

FIG. **1** illustrates a flagpole rigging arrangement in which the halyard clasp of the present invention is employed. A flagpole **10** generally employs a top halyard pulley **14** at the upper portion of the flagpole. A tie off

cleat **15** is generally disposed on the lower portion of the flagpole.

A halyard **13** is rigged between the halyard pulley **14** and the tie off cleat **15.** The halyard so rigged in this manner includes an inner halyard run which is adjacent the pole and an outer halyard run.

A conventional rigging includes a clasp which is tied off to the outer halyard run. The clasp will include a conventional snap eye which snaps to the eye **16** of the flag **11.** In this arrangement, movement between the inner halyard run and outer halyard run is not controlled. Under windy conditions, the flag will be carried with the wind and draw the outer halyard run taut away from the flagpole. As this occurs, the inner halyard run will likewise be drawn taut but in the opposite direction against the pole thus contacting the pole and creating a noise condition. This noise condition created by the inner halyard run is eliminated by the clasp **12** of the present invention which is generally shown in FIG. **1** and, in more detail, in FIGS. **2–4.**

The halyard clasp **12** of the present invention includes a first substantially flat body member **17.** The body member **17** includes an aperture **21** disposed centrally of the body member. One end **24** of the flat body member **17** terminates in a hook **25.**

The opposite end **23** of the substantially flat member **17** is formed integral with the body member **17** and includes an aperture **32** therein. The aperture **32** in conjunction with the end **23** of the member forms a clew which is used as hereinafter described.

The clasp **12** also includes a second substantially flat member **18.** The member **18** has an axle **20** projecting perpendicular from the surface of the member **18.** The axle is hollow and includes an aperture **19** therein which extends entirely through the substantially flat member **18** and its projecting axle. The dimensions of the axle **20** are such as to provide a complementary fit within the aperture **21** in the first body member **17** to journal the second body member **18** within the first body member **17** as shown in FIG. **4.**

As more specifically shown in FIG. **4,** the lower portion of the aperture **21** in the first body member is champfered outwardly. During assembly, the axle **20** of the second body member is asserted into the aperture **21** and held in place. Thereafter, the lower edge of the axle is flared into the champfer to provide a flange which rides against the champfer to connect the pieces together. In one embodiment, the clasp may be made of a material such as nylon which can be heated to permit the material in the axle to flow and form the flange which cooperates with the champfer. In those cases it is desired that the clasp be made of a metallic material, a pressing operation can be performed to create the interlocking flange.

The second body member **18** further includes a hook **27** projecting from one end thereof. The hook **27** is of a configuration complementary with the hook **25** in the first body member but is of an opposite direction. The hook **27** is so dimensioned that the hooks **25** and **27** of the first and second body members respectively will overlay one another to form a closed securing eye when the hooks are rotated toward each other and shown in FIG. **2** and which may be opened when rotated apart as shown in FIG. **3.**

The first and second body members and their associated hooks are maintained in a closed position by a projection and detent arrangement. The hook **25** in-

cludes a detent **26** in the end of the hook as shown in FIG. **3.** Hook **27** associated with the second body member **18** also includes a small projection **28.** When the hooks are in closed position, the projection **28** will snap into the detent **26** and maintain the hooks closed.

The second body member **18** further includes a thumb grip **29.** During opening of the clasp, the thumb grip **29** is adapted to be engaged by the thumb while the fingers of the hand grip the opposite side of the clasp. Pressure on the thumb will disengage the projection from the detent and the clasp will be opened.

The upper portion of the first body member **17** includes an abutment shoulder **31.** The second body member **18** likewise includes a corresponding abutment shoulder **30.** The respective shoulders **30** and **31** are designed to abut each other, as shown in FIG. **3,** to provide a stop for the maximum open travel of the hooks one from another.

The clasp of the present invention is shown in use in FIG. **2.** The halyard runs are rigged such that the inner halyard run passes through the clew in the clasp. The outer halyard run passes through the opening **19** in the axle of the second body member. Overhand knots in the outer halyard run above and below the clasp and on either side of the axle secure the clasp to the outer halyard run.

After the clasp has been rigged to the halyard, the flag **11** can be easily attached and disattached from the clasp. During attachment, the second body member is rotated away from the first body member to open the securing eye. Thereafter, the eye **16** of the flag is passed over the hook of the first body member and the hook on the second body member then snapped into place to close the securing eye. Thereafter, the halyard may be drawn to raise the flag to the top of the pole.

It will be appreciated that the clasp of the present invention provides an unique structure in which the inner and outer halyard runs are tied together to prevent noisy contact of the inner halyard with the pole during windy conditions. It will also be appreciated that the clasp of the present invention provides a novel and unique cooperation of axle for journaling of the first and second body members to provide the securing closure while at the same time the hollow axle doubles as the eye through which the outer halyard is passed for securing the clasp to the halyard.

The flag clasp of the present invention has been described in respect to the particular embodiment thereof shown in the drawing. Other modifications and embodiments of the design shown may become apparent to those skilled in the art by reason of the foregoing disclosure. Accordingly, it is to be understood that the embodiment shown is illustrative of the invention only and the scope of the invention is to be determined by the claims.

I claim:

1. In apparatus for supporting a flag including a flagpole, a halyard pulley and cleat carried by the flagpole at the upper and lower portions thereof respectively, a halyard rigged between the halyard pulley and cleat forming an inner and outer halyard run and at least one clasp secured to the outside halyard run for securing a flag; an improved clasp including

a first substantially flat body member having an aperture therein perpendicular to the body member and terminating at one end in a flat hook;

a second substantially flat body member having a hollow axle extending perpendicular therefrom of configuration to mate with the first aperture within the first body member and journal the first and second body members one to another, the second body member terminating in a second hook of configuration to cooperate with the first hook to form an opening securing eye as the first and second body members are rotated one to another; and

a clew secured to either the first or second flat body member whereby the outside halyard run may be tied off through the hollow axle of the second flat body member and the inside halyard run may be passed through the clew permitting the inner and outer halyard runs to move together in wind induced lateral movements of the flag thus preventing and silencing the inner halyard's contact with the flagpole.

2. The apparatus of claim **1** wherein the first and second hooks include a cooperating projection and detent to maintain the hooks in closed position.

3. The apparatus of claim **1** wherein the clew is formed integral with either the first or second body member and further including a thumb grip projecting from the other body member to aid in opening of the clasp.

* * * * *