PCT WORLD INTELLECTUAL PROPERTY ORGANIZATION
International Bureau

INTERNATIONAL APPLICATION PUBLISHED UNDER THE PATENT COOPERATION TREATY (PCT)

(51) International Patent Classification 5 :		(11) International Publication Number:
A61M 25/10	A1	WO 93/04727
		(43) International Publication Date: 18 March 1993 (18.03.93)

(21) International Application Number: PCT/GB92/01552

(22) International Filing Date: 24 August 1992 (24.08.92)

(30) Priority data:
9118670.0 30 August 1991 (30.08.91) GB

(71) Applicant *(for all designated States except US):* AMERICAN MEDICAL SYSTEMS [US/US]; 11001 Bren Road East, Minnetonka, MN 55343 (US).

(72) Inventors; and
(75) Inventors/Applicants *(for US only) :* McNICHOLAS, Thomas, A. [GB/GB]; Little Lodge, London Road, Hitchin, Hertfordshire SG4 9EW (GB). MAKOWER, Joshua [US/US]; One Wyndham Court, Nanuet, NY 10954 (US).

(74) Agent: BOWMAN, P., A.; Lloyd Wise, Tregear & Co., Norman House, 105-109 Strand, London WC2R 0AE (GB).

(81) Designated States: AU, BR, CA, FI, JP, KR, NO, US, European patent (AT, BE, CH, DE, DK, ES, FR, GB, GR, IE, IT, LU, MC, NL, SE).

Published
With international search report.

(54) Title: BALLOON-CATHETER

(57) Abstract

A catheter (22) suitable for use in the thermal or photomediated treatment of body tissues, such as the prostate gland, dimensioned for insertion into the body and having thereon a balloon (26), the catheter (22) further comprising an inlet (28) and outlet (30) to the balloon (26) to allow pressurisation/inflation of said balloon (26) and the circulation of a cooling fluid (32) into and out of said balloon (26) to effect cooling of the outer surface thereof.

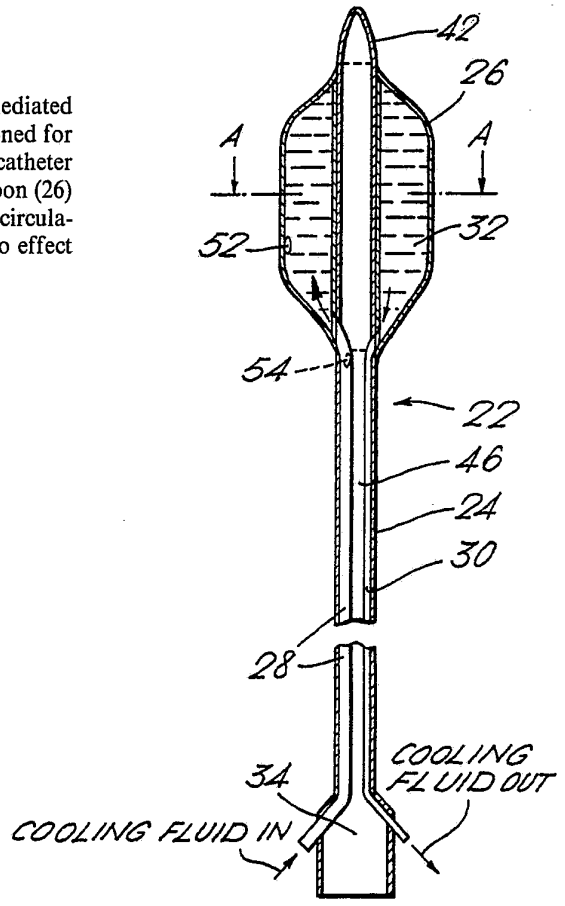

FOR THE PURPOSES OF INFORMATION ONLY

Codes used to identify States party to the PCT on the front pages of pamphlets publishing international applications under the PCT.

AT	Austria
AU	Australia
BB	Barbados
BE	Belgium
BF	Burkina Faso
BG	Bulgaria
BJ	Benin
BR	Brazil
CA	Canada
CF	Central African Republic
CG	Congo
CH	Switzerland
CI	Côte d'Ivoire
CM	Cameroon
CS	Czechoslovakia
CZ	Czech Republic
DE	Germany
DK	Denmark
ES	Spain
FI	Finland
FR	France
GA	Gabon
GB	United Kingdom
GN	Guinea
GR	Greece
HU	Hungary
IE	Ireland
IT	Italy
JP	Japan
KP	Democratic People's Republic of Korea
KR	Republic of Korea
LI	Liechtenstein
LK	Sri Lanka
LU	Luxembourg
MC	Monaco
MG	Madagascar
ML	Mali
MN	Mongolia
MR	Mauritania
MW	Malawi
NL	Netherlands
NO	Norway
NZ	New Zealand
PL	Poland
PT	Portugal
RO	Romania
RU	Russian Federation
SD	Sudan
SE	Sweden
SK	Slovak Republic
SN	Senegal
SU	Soviet Union
TD	Chad
TG	Togo
UA	Ukraine
US	United States of America

BALLOON - CATHETER

The present invention relates to surgical devices generally, and in particular to surgical devices suitable for use in the thermal or photo-mediated treatment of body tissues, such as the prostate gland.

The prostate gland is located at the base of the bladder, where it surrounds a portion of the urethra, the duct by which urine is conveyed from the bladder to the exterior. The function of the prostate is to produce a fluid which becomes a part of the ejaculated semen (also carried through the urethra). Prostatic disease, both benign and malignant, is a common urological problem which accounts for a major part of the health care expenditure in developed countries. As men grow older, the tissue of the prostate often begins to enlarge, a condition called hyperplasia. As the bulk of the prostate enlarges, the gland begins to constrict the portion of the urethra passing through the prostate thereby preventing the normal flow of urine, a condition known as benign prostatic hypertrophy or hyperplasia (BPH). As BPH develops, the constricted regions within the prostatic urethra can from time to time obstruct the flow of urine. The signs of BPH are difficulty in starting urination, dribbling following urination, reduced force of the stream of urine, a tendency to urinate frequently in small amounts, as well as pain and discomfort, and an increase in urinary tract infections. The symptoms are common with 75 to 80% of men over the age

of fifty affected.

In fact, recent statistics apparently reveal that a 50 year old man in the USA has a 20 to 25% chance of undergoing a prostatectomy during his remaining lifetime. It is currently estimated that about 500,000 prostatectomies are performed each year in the United States alone. See the Harvard Medical Health Letter, September 1988, Vol. 13, No. 11, pp.1 to 4 and Castaneda et al., "Prostatic Urethra: Experimental Dilation in Dogs", Radiology, June 1987, pp. 645 to 648, and Castaneda et al., "Benign prostatic Hypertrophy: Retrograde Transurethral Dilation of the Prostatic Urethra in Humans", Radiology, June 1987, pp. 649 to 653.

When the obstructive symptoms of BPH become bothersome, the constricted portions of the urethra are usually reopened surgically. Current accepted treatment for BPH involves either open or transurethral surgery, which is costly and is associated with an acceptable but undesirable degree of mortality (estimated from 1.3 to 3.2% - see Castaneda et al., "Benign Prostatic Hypertrophy: Retrograde Transurethral dilation of the Prostatic Urethra in Humans", Radiology, June 1987, pp. 649 to 653) and with a significant degree of morbidity, especially in less fit patients.

One popular surgical procedure for treating BPH, as an alternative to open surgery, is a transurethral resection of the prostate, or TURP. The transurethral resection involves inserting a resectoscope through the

urethra. A spring wire, adapted to carry an electric current, is inserted through the resectoscope for use in removing tissue. The wire carries one current for cutting away the tissue and another current for cauterizing the remaining tissue to minimize bleeding. Typically, as much as $30cm^3$ (about 2 cubic inches) of tissue are removed in this way.

An alternative but similar procedure is the radial prostatectomy, usually limited to the tissue at the bladder neck region and known as a bladder neck incision, or BNI. In this procedure, radial cuts, parallel to the longitudinal direction of the prostatic urethra, are made transurethrally into the prostate with the wire of a resectoscope (such a procedure has been suggested for removing constrictions of a stenotic region of upper air passageways by vaporizing tissue with a laser beam to form radial cuts in the stenotic region of the air passageways - see Shapshay et al., "Endoscopic Treatment of Subglottic and Tracheal Stenosis by Radial Laser Incision and Dilation", Annals of Otology, Rhinology & Laryngology, Vol. 96, No. 6, November-December 1987, pp. 661 to 664).

The TURP and BNI/prostatectomy surgical techniques are neither trivial nor inexpensive. The procedure carries the same risks as many other general surgical procedures, including those associated with the use of general anaesthesia. Other surgical hazards include stricture formation at the urethra or bladder neck, post-manipulation

pain or bladder spasm, urinary tract infections and reactive urethral swelling which can cause urinary obstruction and epididymitis. Other complications include infection and retrograde ejaculation. Further, the post-operative care following a TURP procedure requires a prolonged hospital stay, creating substantial costs for medical care. In addition, some men have reported sexual dysfunction following the resection. Certain men have also become incontinent as a result of the surgery because of inadvertent damage done to the distal sphincter muscle apparatus lying at the apex of the prostate and extending downstream in the wall of the membranous urethra, and responsible for controlling urine flow. The surgery usually results in moderate discomfort with some post-operative bleeding being usual.

As a result of the trauma that many men experience from TURP, the relatively long in-patient care required for post-operative recovery, the possibility of other less well understood effects on cardiac function, and the possibility of increased long term mortality compared to open prostatectomy (see Roos et al., "Mortality and Reoperation After Open and Transurethral Resection of the Prostate for Benign Prostatic Hyperplasia", New Eng. J. Med., Vol.320, pp. 1120 to 1124, 1989), alternative techniques of treating BPH and other prostate disorders are being investigated.

Heat treatment has for many years been investigated as a way of destroying diseased tissue. Microwaves and radiofrequency ultrasound have been used to treat enlarged

prostate tissue, the applied heat causing the swelling to subside. These techniques generally involve inserting a probe comprising an antenna capable of emitting microwaves into the patient's rectum at a point adjacent to the prostate gland. The emitted microwaves are capable of penetrating the wall of the rectum and are focused into the prostate. The problem with this techniques is largely one of accuracy, that is, directing the energy into the target tissue without heating adjacent normal tissue, and delivering sufficient energy to raise the diseased tissue to the requisite temperature to cause cell death. Because of this, several treatments are normally required before the prostate returns to its normal size, thereby making this process both time-consuming and expensive.

Laser surgery utilises laser light transmitted through flexible optic fibres, either illuminating the target in a hollow viscus or inserted percutaneously, through needles, directly into the centre of the target lesion, thereby minimising the effects on surrounding tissues. Interstitial hyperthermia induced by lasers was first described by Bown, S.G., "Phototherapy of Tumours", World T. Surg, Vol.7, pp.700 to 709, 1983 and subsequently by Hashimoto, E. et al., "In Depth Radiation Therapy by YAG Laser for Malignant Tumours in the Liver Under Ultrasonic Imaging", Gastroenterology, Vol.88, p.1663, 1985; Godlewski, G. et al., "Deep Localized Neodymium (Nd)-YAG Laser Photocoagulation in Liver Using a New Water Cooled and Echoguided Handpiece", Lasers in Surgery and Medicine,

Vol. 8, pp.501 to 509, 1988, and Steger, A.C. et al., "Intestinal Laser Hyperthermia: A New Approach to the Local Destruction of Tumours", British Medical Journal, Vol. 299, p.365, 1989.

The use of laser radiation has been described for removing tissue of the prostate gland so as to remove tumours or all or part of the gland as an alternative to the electrocautery resection technique described above. See US Patent No. 4,672,963 and Smith, J. A. et al., "Laser Photoradiation in Urologic Surgery", The Journal of Urology; Vol. 31, April 1984, pp. 631 to 635, cited therein.

The device described in US Patent No. 4,672,963 uses a computer to continuously adjust the amount of laser radiation transmitted to the prostate during the procedure. The device includes an ultrasonic probe, inserted transurethrally or positioned externally, for imaging the prostate in real time during the procedure so as to provide real time data regarding the destruction of the prostate tissue, thereby enabling the computer to adjust the laser radiation accordingly. Transrectal and external ultrasonic imaging of the prostate are well known as further suggested by Sanders, R.C. et al., "Update on Prostatic Ultrasound", Urologic Radiology, 1967; Fleischer, A.C., "Prostatic Endosonography - A Potential Screening Test", Diagnostic Imaging, April 1987, pp.78 to 82; and Lee, F., "Prostatic Evaluation By Transrectal Sonography: Criteria for Diagnosis of Early Carcinoma", Radiology, Vol. 158, pp.91

to 95, January 1986.

International Patent Publication No. WO 90/13333 discloses a device for use in dilating the urethra of the prostate gland to relieve the symptoms of prostate enlargement. The device generally comprises a catheter having disposed at the remote end thereof an inflatable balloon for temporarily dilating at least a portion of the prostatic urethra and sized so as to compress the tissue of an average sized prostate gland enlarged by BPH. The catheter also includes means for transmitting a laser beam along an axis transverse to the general direction of the urethra so that the laser beam can be selectively directed into portions of the tissue compressed by the balloon. The balloon is preferably made of a material substantially transparent to the laser beam, the laser being focused by the surgeon through the wall of the balloon into the prostatic tissue. The tissue heated by the laser is denatured producing a general coagulation necrosis of the treated region. As the denatured tissue heals, the treated tissue region contracts so as to effectively dilate the urethral passageway, thereby restoring urine flow.

The present invention provides various devices which find general application in the heat treatment of body tissues. The devices of the invention find particular utility in the treatment of benign prostate hypertrophy and prostate cancer. However, it should be evident that while the preferred embodiments of the devices of the invention are described hereinafter for use in prostatic surgery they

can also be used to treat tissue(s) in other parts of the body, such as the bladder, lesions within the kidney or adrenal gland, benign or malignant growths within the liver, gut, breast, brain, lung, uterus and skin and vascular abnormalities throughout the body.

Thermal treatment of diseased prostatic tissue and in particular laser surgery of the prostate represents an alternative approach to curative therapy without the morbidity of radical surgery or radiotherapy. The term "thermal treatment" as used herein is intended to encompass both mild heating, commonly referred as 'hyperthermia', as well as the more vigorous heating used to denature (or coagulate) the treated tissue. Thermal treatment can be performed by a variety of methods, such as microwave, radiofrequency and whole body heating, but the advantage of laser surgery is that the thermal energy can be delivered deep within the tissues of the body through optic fibres of relatively non-traumatic size. Thus, while the devices of the invention are suitable for use with a wide variety of apparatus for administering thermal energy to the body, including both microwave and other radiofrequency generating apparatus, they find particular utility with apparatus for laser surgery. The term "laser surgery" as used herein generally refers to the delivery of laser radiation into the body to effect the thermal warming of the target tissue, but it is also intended to encompass photodynamic therapy in which the target tissue is pretreated with a photoreactive chemical before exposure to

radiation of the appropriate wavelength to initiate the photochemical reaction.

According to one aspect of the present invention there is provided a catheter dimensioned for insertion into the body and having thereon a balloon, the catheter further comprising an inlet and outlet to the balloon to allow pressurisation/inflation of said balloon and the circulation of a cooling fluid into and out of said balloon to effect cooling of the outer surface thereof. Preferably, the cooling fluid is responsible for inflating/pressurising the balloon. The device ordinarily comprises at least two conduits disposed along the catheter and arranged so as to transport cooling fluid to and from the balloon.

The balloon-catheter devices of the invention find particular utility in the selective heat treatment of certain body tissues where they are used to provide cooling for those non-target tissues or organs in close proximity to the tissue(s) being treated. The cooling fluid is circulated through the device to cool the cuff of the balloon which is in direct contact with the tissue(s) and/or organs to be protected. Unlike known catheters, where an opening is provided at the remote end of the catheter to flood the site of insertion with a cooling fluid, such as saline, it is possible to cool those tissues in direct contact with the balloon.

The balloon-catheters of the invention are particularly advantageous inasmuch as they can provide

simultaneous cooling of non-target tissue(s) together with, on inflation of the balloon, therapeutic dilation of the body tissue being treated. The balloon is preferably sized such that, when inflated, it compresses the target tissue, thereby generating a zone of relative ischaemia and increasing the efficiency of the heat treatment. Moreover, when inserted into an occluded body passageway, e.g., the constricted region of the prostatic urethra, inflation of the balloon may, by distending the passageway, contribute to restoring its original calibre.

Therefore in accordance with another aspect of the invention there is provided a method of heat treating the body wherein thermal energy is delivered to a target body tissue, said method further comprising inserting a balloon-catheter of the invention into the body, inflating the balloon and circulating cooling fluid therethrough to effect the cooling of tissues and/or organs in close proximity to the target tissue.

One preferred application of the balloon-catheter is in the heat-treatment of the prostate, e.g., to treat BPH or prostatic carcinoma, to provide cooling for the proximal and/or distal urethral sphincter muscles and most importantly for the lining of the urethra during removal of the diseased tissue. The balloon-catheter is preferably dimensioned such that it can be inserted into the body via the urethra, ordinarily through the operating channel of conventional endoscope, such that the balloon lies within the prostatic fossa. The balloon-catheter may, however be

inserted via any appropriate transrectal, transperineal (or other transcutaneous route) or transurethral route using any of a conventional endoscope, cystoscope or resectoscope. The balloon is preferably sized such that, when inflated within the prostate fossa, the urethra will expand so as to compress at least a selected portion of the prostatic tissue, thereby generating a zone of relative ischaemia.

The balloon is generally designed to accommodate temperatures of up to 10 atmospheres (1.01×10^6 Nm^{-2}), although in situ the balloon pressure would not normally exceed about 5 atmospheres (5.05×10^5 Nm^{-2}).

The balloon-catheter may also comprise one or more conduits disposed along the catheter and arranged so as to allow the site of insertion to be flushed with a local anaesthetic gel or solution. The outer surface of the balloon may be textured so as to retain an anaesthetic gel or solution applied thereon.

The balloon-catheter may also comprise one or more conduits disposed along the catheter adapted to receive viewing means, e.g., a viewing fibre optic or rod lens, to allow the surgeon to monitor the insertion manoeuvre and/or the site of insertion.

The balloon-catheter may also include a smaller, secondary balloon located either proximal and/or distal to the main balloon through which the cooling fluid is also circulated to provide cooling for the urethral sphincter muscle apparatus.

The balloon-catheter is preferably configured so as to facilitate the delivery and temporary implantation of and/or the secure retention of an optic fibre or other heat generating probe (referred to hereinafter simply as the "probe") into a given tissue or organ of the body for the express purpose of delivering laser/thermal energy thereto.

In one embodiment, the probe may be inserted into the target tissue independently of the balloon-catheter, the simple act of inflating the balloon stabilising the probe by pressing it against and/or compressing the tissue in which it is inserted. The outer surface of the balloon may be advantageously textured so as to increase the purchase of the balloon for the probe.

Alternatively, the probe may be slidably manipulated through the catheter into the target tissue. The balloon-catheter may include means to facilitate the implantation of the probe into the target tissue. In the simplest embodiment, the implantation means may take the form of a needle-tipped canula which is slidably manipulated through the catheter into the target tissue, the probe in turn being manipulated through the canula. The balloon-catheter may also include means to deflect the probe and/or the canula away from the catheter into the target tissue and/or means to displace the probe predictably forwards into the target tissue or the canula predictably backwards to expose the probe.

The balloon-catheter or a component part thereof may be treated so as to render it more echogenic to

ultrasound imaging and/or provided with readable depth markings so as to allow the surgeon to monitor the depth of insertion into the body.

According to another aspect of the invention there is provided an applicator device for inserting an optic fibre or other heat generating probe into the body, the device comprising:

a housing adapted to be held by the surgeon;

an elongate delivery tube adapted to be inserted into the body, one end of which is mounted in said housing;

said optic fibre or other heat generating probe being disposed within the delivery tube, and

means to protrude the optic fibre or probe from the delivery tube or means to retract the delivery tube over the static optic fibre or probe so as to expose the fibre/probe.

The optic fibre or probe is ordinarily shrouded by a needle-tipped canula likewise disposed within the delivery tube and which can be protruded or retracted so as to expose the probe/fibre.

In a preferred embodiment, at least one of the delivery tube, canula and optic fibre or probe is separable from the remainder of the device which can be withdrawn from the body leaving the separable component in place within the body.

The applicator device may also comprise one or more of the following optional features:

(1) At least a portion of the delivery tube and/or

canula may be treated so as to render it more echogenic to ultrasound location.

(2) At least a portion of the delivery tube and/or canula may be provided with readable markings to allow the surgeon to determine the depth of insertion into the body.

(3) Means to flush an irrigant through the delivery tube to free obstructions etc.

(4) Means to deflect the emerging optic fibre or probe and/or canula away from the delivery tube.

(5) Viewing means to allow the surgeon to monitor the insertion maneouvre and/or the site of insertion.

(6) The delivery tube and/or the canula may be provided with anchoring means to facilitate their temporary anchorage within the body.

(8) The applicator device may be provided with a inflatable balloon on the delivery tube, the tube further comprising an inlet and outlet to the balloon to allow the pressurisation/inflation of the balloon and/or the circulation of a cooling fluid into and out of the balloon.

According to a further aspect of the invention there is provided a method of heat or photo-treating a given tissue or organ of the body in which an optic fibre or other heat generating probe is inserted, either percutaneously or through an appropriate body cavity, into the target tissue or organ using an applicator device of the invention for the purpose of delivering laser/thermal energy thereto.

The present invention also relates to the

combination of a balloon-catheter and an applicator device of the invention.

According to another aspect of the invention there is provided an optic fibre for use in the heat and /or photo-treatment of a given tissue or organ within the body, the fibre comprising a core having thereon a cladding and comprising one or more of the following:

(a) means to facilitate the accurate positioning of the fibre within the body;

(b) steering means to allow the direction of fibre travel within the body to be controlled;

(c) means to facilitate the temporary anchoring of the fibre in the body, and

(d) one or more temperature sensors disposed along the fibre to allow the temperature of target and/or non-target tissue(s) to be monitored.

The positioning means (a) may comprise, for example:

treating at least a portion of the fibre so as to render it more echogenic to ultrasound location;

providing at least a portion of the fibre with an ultrasound emitter to aid its ultrasound location;

providing at least a portion of the fibre with a plurality of readable markings to allow the depth of insertion to be determined, and

providing a self-tightening or lockable bead which is slidably disposed along the fibre so as to abut a suitable anatomical landmark.

The steering means (b) may comprise, for example:

one or more steering wires affixed to the remote end of the fibre and disposed along the length thereof and arranged such that by appropriate manipulation of said wire(s) the direction of travel of the fibre can be controlled.

The anchoring means (c) may comprise, for example:

an inflatable balloon arranged such that, when the fibre is inserted into said tissue or organ, the balloon can be inflated to secure the fibre in position for the duration of the treatment, and

one or more protrudable anchoring members disposed on the fibre and arranged such that, when the fibre is inserted into said tissue or organ, the anchoring member(s) can be protruded into the target tissue to secure the fibre in position for the duration of the treatment. The anchoring member may take the form of a wing, cage, spike or hook.

The optical fibre may also comprise a collar enshrouding at least a portion of the fibre, the collar bearing the above described features (a) to (d).

According to a further aspect of the invention there is provided a method of heat or photo-treating a given tissue or organ of the body in which an optic fibre of the invention is inserted into the body, either percutaneously or through an appropriate body cavity, for the purpose of delivering laser radiation to said target tissue or organ.

According to another aspect of the present invention there is provided a cooling jacket for an ultrasound probe adapted to be inserted into the body of a patient, the jacket comprising an outer sleeve defining a central space and having an opening at one end to allow the remote end of the ultrasound probe to be inserted into the central space, the opening being dimensioned such that the sleeve has a sealing fit about the ultrasound probe, the jacket further comprising an inlet and an outlet to allow pressurisation/inflation of the jacket and the circulation of a cooling fluid through the jacket to effect cooling of the outer sleeve. Preferably, the cooling fluid is responsible for pressurising/inflating the jacket. The cooling jacket ordinarily comprises at least two conduits arranged for transporting cooling fluid to and from the jacket.

The cooling jacket may optionally be provided with an inner sleeve having a complementary fit about the remote end of the ultrasound probe.

The cooling jacket is preferably formed of a compliant material, such as latex, to allow for independent movement of the probe when inserted into the body.

The invention also relates to the combination of an ultrasound probe and the aforesaid cooling jacket.

Ultrasound probes provided with such a cooling jacket find particular utility in the selective heat treatment of certain body tissues where they can be used to provide cooling for those non-target tissues or organs in

close proximity to those being treated, in addition to their normal imaging function. The cooling fluid, typically water, saline or any other physiologically compatible fluid, is circulated through the jacket to cool the outer sleeve which is in direct contact with the tissues and/or organs to be protected.

Therefore in accordance with a further aspect of the invention there is provided a method of heat treating the body in which thermal energy is delivered to a target body tissue or organ wherein an ultrasound probe fitted with a cooling jacket of the invention is inserted into the body and cooling fluid is circulated through the jacket to effect cooling of non-target tissues or organs in close proximity thereto.

One preferred application of the cooling jacket is in the heat-treatment of the prostate to provide cooling for the lining of the rectum. The ultrasound probe is preferably dimensioned such that it can be inserted into the rectum of the patient via the anus with the cooling jacket sized such that, when inflated, the outer sleeve of the jacket contacts the walls of the rectum to protect the lining of the rectal wall from heat damage.

The cooling jacket is preferably configured so as to facilitate the delivery and temporary implantation of and/or the secure retention of an optic fibre or other heat generating probe into the target tissue or organ. The cooling jacket may comprise one or more conduits extending through the jacket to a port(s) provided in the outer

sleeve to allow the optic fibre or probe to be manipulated through the jacket into the target tissue or organ. Movement of the optic fibre or probe can adventageously be directed via real-time feedback from visual ultrasound images generated by the ultrasound probe of the thermal-tissue effect.

The surgical devices of the invention will now be described by way of example with reference to the accompanying drawings, in which:

Figure 1 is a simplified anatomical illustration of the human (male) uro-genital system;

Figure 2 is a longitudinal section through one embodiment of a balloon-catheter in accordance with the invention;

Figure 3 is a transverse section along the line A-A of the balloon-catheter of Figure 2;

Figure 4 is a perspective view of the remote end of an alternative embodiment of balloon-catheter in accordance with the invention;

Figures 5 and 6 represent simplified anatomical illustrations of the human (male) uro-genital system having disposed within the urethra a balloon-catheter in accordance with the invention;

Figure 7 to 9 are simplified representations of applicator devices in accordance with the invention;

Figures 10a and 10b are sectional views of the remote end of the delivery tube of an applicator device in accordance with the invention;

Figures 11a to 11c illustrate an alternative embodiment of applicator device;

Figure 12 illustrates another embodiment of applicator device in accordance with the invention;

Figure 13 illustrates a further embodiment of applicator device in combination with a balloon-catheter of the invention;

Figure 14 is an anatomical illustration of the uro-genital system of a patient undergoing laser surgery of the prostate and having disposed within the prostatic fossa a balloon-catheter of the invention;

Figure 15 illustrates another embodiment of applicator device in combination with a balloon-catheter of the invention;

Figure 15a illustrates a perspective view of the remote end of the delivery tube of a modified version of the applicator device of Figure 15;

Figure 16 illustrates a further embodiment of applicator device in combination with a balloon-catheter of the invention;

Figure 16a is a sectional view along the line B-B of the applicator device/balloon-catheter combination of Figure 16;

Figures 17a and 17b are perspective views of the remote end of a canula having a self-anchoring mechanism for use with an applicator device in accordance with the invention;

Figures 18 and 19 are sectional views of the remote

end of the canula of an applicator device of the invention having means to limit the extent of maximum travel of an optic fibre disposed therein;

Figure 20 is a sectional view of a body cavity having disposed therein an ultrasound probe fitted with a cooling jacket in accordance with the invention;

Figures 21 and 22 are simplified anatomical illustrations of the prostate of a patient undergoing prostatic surgery having disposed therein the probe/jacket combination of Figure 18;

Figure 23 is a sectional view of the anal passage of a patient undergoing prostatic surgery having disposed therein an ultrasound probe fitted with an alternative embodiment of cooling jacket in accordance with the invention;

Figure 24 is a perspective view of the proximal end of the probe/jacket combination of Figure 23;

Figures 25 and 27 are simplified anatomical illustrations of the prostate of a patient undergoing prostatic surgery having disposed therein the probe/jacket combination of Figure 23;

Figure 26 is a transverse sectional view along the line C-C of the anatomical illustration of Figure 25;

Figure 28 is a transverse sectional view through a probe fitted with a further embodiment of cooling jacket in accordance with the invention, and

Figures 29 to 41 illustrate various embodiments of optic fibres modified in accordance with the invention.

Figure 1, is a simplified anatomical illustration of the human (male) uro-genital system. The prostate (2) is a gland found in male mammals surrounding the urethra (4) in the region where it leaves the bladder (6). It releases a fluid containing various substances, including enzymes and an anti-coagulating factor, that contribute to the production of semen which is released through the penis (8) via the urethra (4) at sexual orgasm. The size and secretory function of the prostate (2) are under hormonal control. Urine enters the bladder (6) from the ureters (not shown) and is discharged to the exterior through the urethra (4) under the control of the proximal and intrinsic distal sphincter muscles (10 and 12 respectively) which are situated at the neck of the bladder (6) and at the apex of the prostate (2), the latter marked endoscopically by the presence of the verumontanum, and extend into the membranous urethra (4). The position of the seminal vesicles (14) and the pubic symphysis (16) is also shown. Benign prostatic hypertrophy (BPH) is generally caused by the transitional (or central) zone (18) of the prostate (2) enlarging, usually with age, thereby compressing and restricting the outflow of urine from the bladder (6). Malignant prostate cancer, now the second commonest cause of death from malignant disease in the UK and the commonest cause of death from malignant disease in US males, is normally associated with the peripheral zone (20) of the prostate (2), sometimes referred to as the "true prostate".

The prostate (or other target tissue or organ) is

scanned by the most appropriate method, ordinarily transrectal ultrasound (TRUS), to identify the target areas within the prostate, that is, BPH of the transitional zone and peripheral zone lesions in the case of prostatic carcinoma.

The target areas may be marked in the scanner's memory as a series of three-dimensional co-ordinates which allow for the precise insertion of the optic fibre or other heat generating probe (and/or any other appropriate surgical instrument/device) into the area(s) of interest. Of course, the patient must remain in or be repositioned in the position used for the original scanning procedure which may be immediately prior to the actual operation or at some earlier occasion.

One surgical device of the invention comprises a catheter dimensioned for insertion into the body and having thereon a balloon, the catheter further comprising an inlet and an outlet to allow pressurisation/inflation of the balloon and circulation of a cooling fluid into and out of the balloon. The balloon-catheter is primarily intended to be used in the selective thermal treatment of diseased body tissue to cool those non-target tissues in close proximity to the tissue being treated. They find particular utility in the treatment of benign prostatic hypertrophy and carcinoma of the prostate where they are employed to provide cooling for the sphincter muscles and most importantly the lining of the urethra or rectum (depending on whether the balloon lies in the prostatic urethra or

rectum).

The balloon-cather is normally hand held and inserted into the body via the transrectal, transperineal (or other transcutaneous route) or transurethral route using a resectoscope, endoscope or cystoscope. The balloon-catheter is preferably sized so as to allow for its insertion through the operating channel of a conventional endoscope if it is to be inserted via a body cavity, such as the urethra. The balloon-catheter may be sufficiently rigid so as to allow for its insertion through the skin, e.g., the skin of the perineum. Insertion through the skin would ordinarily be guided by the use of biopsy guides and channels.

The balloon-catheters of the invention (denoted generally by (22)) will now be described in greater detail with reference to Figures 2 to 6. Each device (22) generally comprises an elongate catheter (24) dimensioned so as to be capable of insertion into the body cavities of the patient and having thereon a balloon (26). Both ends of the balloon (26) are secured to the catheter (24) to form a hermetic seal between the balloon (26) and the outer wall of the catheter (24).

The balloon is preferably sized such that when it is inflated within the prostatic urethra, the urethra of an average sized hypertrophied prostate gland will expand so as to compress the prostatic tissue, preferably without exceeding its elastic limit. An inflated balloon having a diameter of about 12 to 25 mm is normally adequate for the

average sized hypertrophied prostate gland to achieve the desired compression of the prostatic tissue, although this dimension may vary with smaller and larger prostate glands with the balloon being sized accordingly.

The balloon may be made of various known materials already used in other medical procedures, such as those described in US Patent No. 4490421. . The balloon is generally designed to accommodate up to about 10 atmospheres (1.01×10^6 Nm^{-2}) and preferably no more than about 6 atmospheres (6.06×10^5 Nm^{-2}) of water pressure and should be capable of holding that pressure for at least 5 minutes. Preferably the balloon material is designed to rupture should the pressure exceed the aforesaid limits in order to ensure that ruptures at even greater pressures would not occur causing potential harm to the patient. It should be evident that the material used for the balloon for other procedures in other body passageways, e.g., the rectum, may be of a type which is more compliant, such as a latex material, so as to more readily conform to the shape of the passageway, and may operate at other pressures depending on the balloon size and application.

The balloon-catheter (22) generally comprises at least two conduits (28 and 30) for transporting a cooling fluid (32) to and from the balloon (26). The two conduits (28 and 30) may be connected at their distal ends, thereby forming a closed loop for the cooling fluid (32) or, more preferably, both conduits (28 and 30) may open at their distal end into the balloon (26) as shown in Figure 2. In

this preferred arrangement, the cooling fluid (32), typically water, saline or any other physiologically compatible fluid, is responsible for pressurising and inflating the balloon (26), although if desired separate pressurising/inflation means may be provided. The pressure differential required to inflate the balloon may be provided by a suitable valve mechanism positioned at the proximal end of the conduit draining fluid from the balloon or, alternatively and as shown, the conduit(s) (30) draining the cooling fluid (32) may simply have a smaller bore than the supply conduit (28) or a constriction to provide the requisite pressure differential.

The proximal end (34) of the catheter (24) is adapted to be connected to a suitable fluid supply and pump mechanism (not shown) to allow the balloon (26) to be inflated/pressurised and the cooling fluid circulated therethrough. The device may also be connected to a suitable control unit (not shown - but see Figures 7 to 19) comprising a pistol or scissor grip to facilitate its in situ manipulation.

The cooling fluid is circulated through the device to cool the outer surface (or cuff) of the balloon which is in direct contact with the tissue(s) to be protected. This is in marked contrast to known catheters incorporating cooling means where an opening is provided at the remote end to simply flood the site of insertion. It will be appreciated that it is not possible to cool those tissues, e.g., the lining of the urethra, in direct contact with the

catheter using such devices.

The balloon-catheter (22) may advantageously include a smaller secondary balloon (shown in dotted outline (36) in Figure (4)) situated just below the main balloon (26) through which the cooling fluid (32) is also circulated. The secondary balloon (36) overlies the sphincter active area at the apex of the prostate (2) leading to the urethra (4), to protect the distal sphincter muscle (12). The second balloon (36) can also be used as an aid to positioning the device (22) by providing a palpable marker which can be felt transrectally by the surgeon, thereby confirming that the main balloon (26) has been advanced into the prostatic urethra.

The balloon-catheter (22) may include another secondary balloon (shown in dotted outline (38) in Figure 6) situated above the main balloon (26) which lies in the neck of the bladder (5) and when inflated, anchors the device (22) in position. Cooling fluid (32) may be circulated through the balloon (38) to provide cooling for the proximal sphincter muscle (10).

When treating a patient suffering from BPH, the balloon-catheter (22) is typically inserted into the urethra (4), as shown in Figures 5 and 6, such that the balloon (26) lies within the prostatic region of the urethra (4). The patient is appropriately anaesthetized, for example, with a topical anaesthetic applied liberally within the urethra (4) or by injection of local anaesthetic agents about the target tissue or by regional, spinal or

general anaesthetic. The balloon-catheter may advantageously include a conduit (not shown) extending through or along the catheter to allow the prostatic urethra to be flushed at periodic intervals with an anaesthetic gel or solution. Subsequent expansion of the balloon presses the anaesthetic gel into contact with the tissue of the prostatic fossa.

The outer surface of the balloon (26) may be advantageously textured so as to retain an anaesthetic gel or paste applied thereon.

An additional mild sedative and prophylatic antibiotics may also be given. The penis (8) is then appropriately prepared and draped and the tip (42) of the catheter (24), with the balloon(s) (26, 36 and 38) deflated, inserted through the urethra (4) as shown in Figures 5 and 6.

The manoeuvre can be observed, either endoscopically, ultrasonically or fluoroscopically using any of the appropriate apparatus known in the art, to ensure precise positioning of the balloon. The balloon-catheter may advantageously include a channel or conduit (not shown) extending through or along the catheter for a flexible viewing fibre optic or rigid rod lens to allow the surgeon to endoscopically monitor the passage of the device along the urethra.

Once, the balloon is properly positioned, it is inflated, normally to a pressure of from 2 to 5 atmospheres (2.02×10^5 to 5.05×10^5 Nm^{-2}). The balloon is preferably

sized such that when inflated it compresses at least a selected portion of the prostate to generate a region of relative ischaemia, the compressed tissue having less blood to absorb the laser radiation and/or to remove the heat generated by tissue warming, thereby producing a greater heating effect per Joule of energy administered. Moreover, the cooling fluid circulating through the balloon cools the walls of the prostatic urethra allowing the surgeon to increase the amount of energy applied to the prostate to effect the destruction of the target tissue, while preserving the lining of the urethra.

The balloon-catheter is preferably constructed of ultrasonic-visible material to facilitate its positioning via ultrasound imaging. The balloon-catheter or a portion thereof, e.g., the catheter tip, may also be treated using one or more conventional techniques known in the art, such as, etching, sand blasting etc., for rendering it device more echogenic to ultrasound, as explained hereinafter with reference to the optic fibres shown in Figures 29 to 31.

In a highly preferred embodiment, the balloon-catheter is arranged so as to facilitate the delivery and the implantation of an optic fibre for administering laser radiation to the target tissue, although any other fine calibre, heat generating probe could be employed, e.g., a microwave antenna or a heated wire element. Referring to Figure 6, the fibre (44) can, in the simplest embodiment, be slidably manipulated through the lumen (46) of the catheter (24) and out of a suitable aperture (48) provided

in the remote end thereof into the target tissue. Alternatively, where the fibre is inserted into the prostatic tissue independently of the balloon-catheter, the simple act of inflating the balloon(s) can be used to stabilise the fibre by pressing it against the wall of the prostatic urethra and/or compressing the tissue in which it is inserted. In the former case, the outer surface of the balloon may advantageously be textured so as to increase the purchase of the balloon on the fibre.

The balloon-catheter preferably includes means to facilitate the implantation of the fibre into the tissue. In the simplest embodiment, the applicator means may comprise a needle-tipped canula (not shown) extending through the lumen of the catheter which can be used as a guide to facilitate the accurate delivery of the optic fibre, the fibre being manipulated through the needle-tipped canula into the target tissue. Once guided into position, either by ultrasonic and/or endoscopic or other guidance, then either the canula would be retracted while maintaining the fibre optic at the desired position or, the fibre would be protracted from the canula. Once treatment has ceased, then the fibre can be retracted from the protracted position into the needle-tipped canula and removed from the body. In a preferred embodiment, the balloon is inflated once the fibre has been correctly positioned and includes a groove or slot into which the fibre and/or implantation device sits enveloped in the balloon.

Preferred applicator devices are described hereinafter with reference to Figures 7 to 19.

Where several points are to be treated at one time, the balloon-catheter may allow for the insertion of a canula at each of the predetermined target points, after which a fibre is passed down the individual canulae. As before, each fibre is protruded (or the canula retracted) by a predetermined distance to allow it to stand clear of the canula.

When the fibre optic is manipulated through the catheter, the device is desirably provided with means to deflect the fibre (and/or the canula) away from the balloon and into the target tissue. In the embodiment shown in Figures 2 to 4, the fibre (44) is threaded through the lumen of the catheter (24) into a channel (50) provided in the balloon (26) which is configured so as to deflect the emerging fibre (44), in this particular embodiment, in a direction approximately perpendicular to the direction of travel of the prostatic urethra.

For treatment of benign prostatic hypertrophy, the thermal energy must be directed to the main mass of the lateral lobe of the transitional zone but sufficiently far away from the sphincter areas , the pelvic plexus nerves controlling sexual potency and the lining of the urethra to avoid damage to those structures. The balloon-catheter is ordinarily provided with one or more temperature sensors, to allow the surgeon to monitor the temperature of the tissues being protected. In the embodiment shown in Figure

2, the device (22) is provided with at least one thermocouple (52) at a position approximately equivalent to the middle point of the prostatic urethra so as to monitor the temperature of the urethral lining and preferably a second thermocouple (54) at a position approximately equivalent to the level of the distal sphincter muscle. The leads extending from the therocouples (52 and 54) have been omitted in the interests of clarity.

The laser delivery system preferably includes a laser capable of providing a deeply penetrating continuous or pulsed wave beam. A preferred example is a neodymium-YAG laser because its radiation is not absorbed so strongly by body tissue as some other lasers. The neodymium-YAG laser also provides a more pronounced scattering, with a larger volume tissue effect occurring. Examples of such laser delivery systems include the PEGASUS Laser System, commercially available from Pfizer Laser System Inc. and the MEDILASE 2 Laser System commercially available from MBB Incorporated.

The balloon-catheter may include means (not shown) for ultrasonically viewing at least a portion of the prostatic tissue so that the portions of the prostate to be irradiated can be selected by the user, and the selected tissue exposed to the laser radiation can be observed and monitored by the user in real time during the course of the treatment. This observation is particularly facilitated by the fact that the treated tissue becomes strongly echogenic, that is, visible by ultrasound imaging during

the course of the treatment, allowing modification of the position of the fibre and/or the duration of heating if necessary. Thus, as the zone of visible change expands from the fibre (or other heat source), the position of the fibre may be changed to encompass a larger volume of tissue, usually by gradually withdrawing the fibre.

The device may, for example, include a u/s emitter/receiver which receives the reflected u/s waves from the target region and converts them into an electric signal which correlates with the temperature of that region. The temperature data so produced can be projected onto a colour monitor as coloured areas or bands representing zones of warmer or cooler tissue which can be used as a visual guide to the operator in the positioning, movement and repositioning of the optic fibre (or other heat generating probe) and/or the increase/decrease of the laser energy being delivered.

Alternatively, the change in the blood flow rate within the target region can be analysed from the change in u/s signal reflection using the "doppler shift" principle, to give a velocity value which is projected onto the image of the blood vessel on a screen as a blue colour for relatively slow moving fluid and red colour for faster moving fluid. The blood vessels at the periphery of the heated area initially dilate, thereby increasing the rate of the blood flow (seen as becoming more red), but as the heated area eventually reaches those vessels, the rate of blood flow slows (becoming more blue), presumably as they

become thrombosed, eventually ceasing to flow at tissue death. The aforedescribed methods of using ultrasound to monitor the thermal tissue effect to control the treatment, with the position of the fibre/probe and energy delivered being adjusted to either damage target tissue or to protect vital structures (such as the vessels running just outside the prostatic capsule with the nerves that control potency), represent a further aspect of the invention.

The laser is energized so as to deliver an amount of radiation sufficient to cause the tissue to coagulate. The ultrasonic transducers may be used to view the tissue ultrasonically during and after the treatment to determine the area and extent of coagulation. The typical result of such treatment is indicated by the crosshatched region (56) shown in Figure 6. Once all the selected areas have been exposed to the laser radiation, the balloon can be deflated and the device withdrawn from the urethra. As soon as the balloon is deflated, body fluids will begin to flow into the previously compressed and heated tissue to promote healing. If desired, the balloon-catheter may be withdrawn and loaded with a small temporary indwelling stent which can then be placed in position and dilated to its full diameter over the balloon when it is seen, either endoscopically or ultrasonically, to be lying in an appropriate position within the prostatic urethra, thereby overcoming any consequent oedema that might cause temporarily increased obstructive symptoms. During post-operative healing, the damaged tissue will shrink, thereby

reopening the urethra and restoring the calibre to something like its normal diameter.

The balloon-catheter may also be provided with readable depth markings, e.g., as explained hereinafter with reference to the optic fibre shown in Figure 29, such that the surgeon can determine the depth of insertion into the body. In one embodiment, radio-opaque markers (not shown) may be provided at opposite ends of the balloon which can be seen fluoroscopically to ensure that the balloon is safely advanced into the prostatic urethra before inflation so as to minimise the risk of damage to either sphincter muscle when the balloon is inflated.

The balloon-catheters of the invention are believed to provide several advantages in the treatment of symptoms of BPH and prostatic carcinoma, in particular, preservation of the urethral lining with necrosis of underlying obstructive/malignant tissue, as well as reducing the chances of tissue and muscle damage associated with impotence and incontinence. Furthermore, by inflating the balloon sufficiently to squeeze the tissue so as to compress the tissue without necessarily exceeding its elastic limit, the tissue will not be unnecessarily damaged due to tearing.

A further aspect of the present invention will now be described with reference to Figures 7 to 19.

Figures 7 and 8 illustrate the general principles of an applicator device (100) in accordance with the present invention. The device generally comprises an

elongate, ordinarily rigid but in a preferred embodiment articulated, delivery tube (102) dimensioned for insertion into the body of the patient, and a housing (104) which separates as shown in Figure 7, on operation of the scissor grip (106). When treating the prostate, the device may be inserted through the urethra or the rectum or via the skin by direct puncture, preferably guided by ultrasound and usually inserted via the biopsy channel of an ultrasound probe. A surgical instrument (108), which may be a needle or optic fibre for delivering laser radiation, is anchored in one section (110) of the housing (104) such that operation of the scissor grip (106) causes the instrument (108) to be protruded from and retracted into the delivery tube (102).

Figure 9 illustrates an alternative arrangement of applicator device (112) in which protraction/retraction of the instrument (108) is effected by drawing together the two sections of the housing (104) as indicated. A resiliently-flexible member (114) biases the two sections of the housing (104) apart so that the instrument is ordinarily retracted within the delivery tube (102). A latch mechanism (not shown) may be provided to allow the two sections of the housing (104) to be locked together, thereby fixing the instrument (108) in the protracted position and allowing the surgeon the use of both hands.

In an alternative arrangement (not shown), rather than protrude the instrument from the delivery tube, the delivery tube may be retracted over the static instrument

to leave it standing clear of the device.

When the applicator device is inserted transurethrally, the delivery tube is preferably provided with a suitable deflection mechanism to steer the emerging instrument away from the device and into the tissue of the body, e.g., the lateral lobes of the prostate. For example, referring to Figures 10a, and 10b, the remote end of the delivery tube (102) may have sufficient flexibility to allow for the use of a control wire (116) embedded in or affixed to the end of the delivery tube (102) to control the angle of deflection of an optic fibre (118) as shown.

Figures 11 to 19 illustrate more sophisticated applicator devices.

Referring to the applicator device (120) shown in Figure 11a to 11c, the delivery tube (102) encloses a needle-tipped canula (122) having disposed therein an optic fibre (118) for administering laser radiation to body tissue(s). The delivery tube (102) is provided with an adjustable deflector (124) to steer the emerging cannula (122)/fibre (118) at a range of angles away from the device (120). The angle of the deflector (124) is adjusted by a lever (126) provided on the housing (128). Those skilled in the art will appreciate that there are many ways of articulating/deflecting the remote end of the delivery tube or canula to orientate the fibre (or other instrument) on insertion.

Operation of the scissor grip (106), as shown in Figure 11b, causes the needle-tipped canula (122) to

protrude from the delivery tube (102). The fibre (118) is in turn protruded from the canula (122) by the surgeon pushing on the finger grip (130) of a collar (132) secured to the proximal end of the fibre (118), as shown in Figure 11c. The collar (132) may be adjustable to allow the surgeon to define the maximum allowable protrusion of the fibre (118). The scissor grip (106) will typically allow for between 3 to 5 cm movement of the canula (122) and full displacement of the fibre, that is, until the collar (132) abuts the housing (128) of the device, a further 0.5 to 2 cm thereover. A latch mechanism (134) may be provided to allow the surgeon to lock the collar (132) to the housing (128) to stabilise the protruded fibre (118) in position.

In an alternative embodiment (not shown), the needle-tipped canula or, alternatively, the relevant instrument (fibre) or delivery tube, may be disengaged from the remainder of the housing. In this manner, the surgeon can load and implant a succession of canulae into the target region, an optic fibre being manipulated through each canula, to allow for the simultaneous treatment of two or more regions of the target tissue.

A viewing fibre-optic or rod lens (136) may be mounted atop the housing (128) to allow visual inspection of the chosen site of insertion and to confirm that the emerging canula (122) and/or fibre (118) is entering the tissue well away from the sphincter regions. The eyecup (138) of the rod lens (136) may be connected to a suitable video monitor.

Figure 12 illustrates an alternative embodiment of applicator device (140) in which a rod lens (136), together with one or more light conducting elements, the needle-tipped canula (122) and enclosed optic fibre (118) are contained within the delivery tube (102). Inlet and outlet ports (142 and 144) are provided to allow an irrigant, such as water, saline or any other physiologically compatible fluid to be flushed through the delivery tube (102) in order to improve visibility, free obstructions etc.

It will be appreciated that the applicator and balloon-catheter devices of the invention are closely related.

Figure 13 illustrates an alternative embodiment of applicator device (146) in combination with a balloon-catheter (22). The applicator device (146) is inserted through an orifice (148) provided in the proximal end of the balloon-catheter (22) which acts, in this embodiment, as a sheath for the applicator device (146). A window (149) is provided in the remote end of the balloon-catheter (22) through which the surgeon can visualize the target tissue using a rod lens (136) or other similar viewing instrument and though which the optic fibre (118) can pass to the target tissue. Once the fibre is in position, the applicator device (146) may be withdrawn, as shown in Figure 14, or left in position as desired. The balloon (26) is then inflated by circulating cooling fluid therethrough and heating commenced. The whole operation, including the heating stage, would normally be monitored by

ultrasound, typically using a TRUS probe (202) inserted into the patient's rectum. The probe (202) may be provided with a cooling sheath (not shown) as described hereinafter with reference to Figures 20 to 28.

Figure 15 illustrates another embodiment of applicator device (150) adapted to deliver a balloon-catheter (22) to the prostatic urethra. In this embodiment, the balloon-catheter (22) is inserted through the delivery tube (102) of the applicator device (150). Alternatively and as shown in Figure 15a, the balloon-catheter (22) may lie in a slot (152) provided in the remote end of the delivery tube (102).

Figures 16 and 16a illustrate a further embodiment of applicator device (154) in which the delivering tube (102) is formed with a 'U-shaped' cross-section in which the balloon-catheter (22) rests. A conduit (156) extending therethrough is provided for the optic fibre (118) or other instrument.

In an alternative embodiment (not shown), the two devices may be combined in a single integral unit. For example, the cooling balloon may be provided on the delivery tube of the applicator device, with the conduits supplying cooling fluid to and from the balloon passing through or along the delivery tube.

The applicator device or a portion thereof may optionally be provided with readable depth markings and/or treated to render it more echogenic to ultrasound imaging as described hereinafter with reference to the optic fibres

shown in Figures 29 to 32.

The delivery tube and/or the canula may also be provided with anchoring means as described hereinafter with reference to the optic fibres shown in Figures 34 to 39. For example referring to Figures 17a and 17b the needle-tipped canula (122), which may be disengagable from the remainder of the applicator device (not shown), may be provided with an anchoring member to allow for the temporary anchoring of the canula (122) into the target tissue during treatment. In the embodiment shown, the canula (122) is provided with two wire 'wings' (158) which can be manipulated by the surgeon pushing/pulling on a control wire (160) from a 'collapsed' state, as shown in Figure 17a, in which it lies substantially flush with the surface of the canula (122) in slot (162), to an anchoring position, as shown in Figure 17b, in which the wings (158) project into the target tissue, thereby securing the canula (122) in position.

Referring to Figures 18a and 18b, the remote end of the needle-tipped canula (122) may, in a preferred embodiment, be provided with a stop (164) which, as the optic fibre (118) is protruded from the canula (122) into the target tissue, abuts the cladding (166) of the fibre (118) preventing its further movement. In this manner, the length of the fibre core (168) exposed, represented by 'x', will determine the extent of fibre protrusion into the target tissue.

Alternatively and referring to Figures 19a and 19b,

the optic fibre (118) may be provided with a collar (170) secured about the fibre (118) a predetermined distance 'y' from the fibre tip which, as the fibre (118) is protruded from the canula (122), abuts stop (164). The collar (170) may be adjustable to allow the surgeon to control the length of fibre (118) protruded from the canula (122). It will be appreciated that the stop and collar need not be positioned at the remote end of the canula/fibre but may be located at any point along the length thereof.

A further surgical device in accordance with the present invention will now be described with reference to Figures 20 to 28.

Figure 20 illustrates a sectional view of the body cavity (200) of a patient having disposed therein an ultrasound probe (202) of conventional type provided with a cooling jacket (204) in accordance with the invention. The cooling jacket (204) is ordinarily formed of a compliant material, such as latex, and comprises an outer sleeve (206) defining a central space (208). An opening is provided in one end (210) of the cooling jacket (204) to allow the remote end of the probe (202) to be inserted into the central space (208), as shown, the jacket (204) having a sealing fit thereabout.

The cooling jacket (204) is provided in said one end (210) with an inlet (212) which allows for the introduction of a cooling fluid (214), typically water, saline or any other physiologically compatible fluid, into the central space (208), thereby inflating/pressurising the

jacket (204). Preferably, the inlet (212) is connect to a suitable reservoir of cooling fluid (not shown) and pump mechanism (also not shown) to allow the cooling fluid (214) to be circulated through the central space (208) and out of the cooling jacket (204) via outlet (216) to effect the cooling of the body tissues in contact with the outer sleeve (206), in this case, the walls (218) of the body cavity (200). Alternatively, separate inflation and cooling means may be provided. The pressure differential required to inflate the cooling jacket (204) may be provided by a suitable valve mechanism (not shown) at the outlet or, alternatively, the outlet (216) may simply have a smaller diameter than the inlet (212), as shown.

One preferred application of such a device is in the laser or heat treatment of prostate disorders (see Figures 20 and 22). The probe (202) is inserted into the rectum (220) of the patient through the anus (222), with the cooling jacket (204) deflated and positioned such that it lies adjacent the prostate (2). The probe (202) allows the surgeon to visualise the prostate region to facilitate the location of, for example, an optic fibre (224) (or other heat generating probe) inserted either transcutaneously through the skin of the perineum (226) (see Figure 21) or transrectally through the biopsy channel (228) of the probe (202) and/or to monitor the progress of the treatment in real-time, while simultaneously providing cooling for the walls (230) of the rectum (220). Referring to Figure 22, the outer sleeve (206) of the cooling jacket

(204) is provided with a port (232), explained hereafter with reference to figures 23 to 27, through which the optic fibre (224) passes out of the jacket (204) into the rectal passageway. The cooling fluid circulating through the jacket (204) causes it to swell and fill the rectal passageway, thereby anchoring the probe (202) in position.

Figures 23 to 27 illustrate an alternative embodiment of cooling jacket (204) in which the end wall (210) of the jacket (204) is provided with an inner sleeve (234) having a complementary fit about the remote end of the probe (202), the cooling fluid circulating through the closed space (208) defined between the outer and inner (206 and 234) sleeves.

The cooling jacket (204) is advantageously provided with one or more conduits (236) which extend through the closed space (208) to a port (232) provided in the outer sleeve (206). Each conduit (236) is dimensioned so as to allow the surgeon to manipulate surgical instruments, such as biopsy knives, viewing fibre optics etc., through the device into whatever body cavity the probe has been inserted. The conduits (236) may be integrally formed of the same material as the remainder of the cooling jacket (204), but are more preferably formed from or lined with a rigid or semi-rigid material to allow for the insertion of edged instruments. Each conduit (236) is, due to the compliant nature of the outer sleeve (206), afforded a degree of relative mobility, thereby allowing the probe (202) to move freely and to scan various areas as desired.

Each port (232) may be provided with a rupturable membrane (not shown), which may be self-sealing or, it may simply be left open.

Cooling jacket (204) may also be provided with one or more integrally formed channels (238) extending through the outer sleeve (206), into which finer instruments, such as temperature sensors may be inserted to allow the surgeon to monitor the temperature of the relevant body cavity.

Referring to Figures 25 to 27, the device may be used to facilitate the insertion of a optic fibre (224) into the prostate (2). The optic fibre (224), ordinarily enclosed in a needle-tipped cannula (not shown), is manipulated through the device via conduit (236a), through the wall (230) of the rectum (220) and into the target prostatic tissue. The cooling fluid (214) is then circulated through the jacket (204) such that it swells and fills the rectal passageway, as shown in Figures 27, thereby anchoring the probe (202) and fibre (224) in position.

Figure 28 represents a section through an alternative embodiment of cooling jacket (204), in which the inner sleeve (234) is formed as an extension of the outer sleeve (206). Anchoring filaments (240) may be provided between the conduits (236) and inner sleeve (234), as shown.

The advantages of a probe incorporating a sheath in accordance with the invention can be summarised as follows:

(1) To improve the ultrasound imaging

characteristics of the probe by providing an u/s "stand off" and acoustic window.

(2) It allows for cooling of the wall of the rectum (or other body cavity) during heat-mediated treatment of, for example, the prostate.

(3) It can be used to monitor the temperature of the wall of the rectum (or other body cavity).

(4) It can be used to anchor the probe at the desired location in the rectum (or other body cavity).

(5) It allows for the removal of the probe without disturbing other instruments, e.g., the optic fibre.

(6) It allows for movement of the probe, particularly rotational movement, to permit the 'simultaneous' imaging of two or more treatment sites.

(7) The pressure produced by the inflated sheath on the internal conduit may serve to secure any instruments extending therethrough in position.

(8) It allows for the insertion of two or more instruments, such as optic fibres and other heating elements, at various points of a target organ, e.g., the prostate, without disturbing those previously placed.

A further aspect of the present invention will now be described with reference to Figures 29 to 41 which illustrate a series of optic fibres modified for use in the laser surgery of body tissue. Each fibre generally comprises a core and outer cladding. The outer cladding (300) is ordinarily stripped from the remote end of the fibre to expose the core tip (302), typically the distal

0.5cm thereof, which is then blunted and polished.

Figure 29 illustrates one embodiment of optic fibre (304) in which the outer cladding (300) is provided with a plurality of readable depth markings (305) at regular intervals, typically every 0.5cm, to facilitate the accurate positioning of the fibre (304) within the target tissue when using endoscopic or other visual means of guidance. The core tip (302) has also been treated using techniques, such as etching, sand blasting etc., to render it more echogenic (visible) to ultrasound imaging. Moreover, by roughening the core tip (302) in this manner, it is possible to increase the light-emitting surface area of the fibre (304). Of course, should other modalities of imaging be used then the fibre may be modified to increase visibility by that imaging modality.

Figure 30 illustrates another embodiment of optic fibre (306) in which the outer cladding (300) is provided with an ultrasound emitter (308), e.g., a piezo-ceramic compound, to increase the visibility of the remote end of the fibre (306) to ultrasound imaging. The piezo-ceramic compound is excited by an electric current passed along the fibre to improve or allow for u/s location. Other devices known in the art will emit when stimulated by the presence of an u/s field. In an alternative embodiment (not shown), the ultrasound emitter may be provided at regular intervals along the outer cladding of the fibre in a similar manner to the optic fibre (304) shown in Figure 29.

Figure 31 illustrates an alternative embodiment of

optic fibre (310) in which the core tip (302) is provided with the ultrasound emitter (308). The core tip (302) is normally provided with a silicone subbing layer (312) onto which the ultrasound emitter (308) is coated to avoid affecting the light propagating properties of the fibre (310).

Figure 32 illustrates another embodiment of optic fibre (313) in which the remote end (314) of the outer cladding (300), typically the last 0.5 cm, has been treated to render it more echogenic to ultrasound imaging as described earlier with reference to Figure 29. The fibre (312) is also provided with a temperature sensor, e.g., a thermocouple (316), to allow the surgeon to monitor the temperature of the target tissue. The lead (318) from the thermocouple (316) may be embedded in or simply affixed to the outer cladding (300) of the fibre (313). In an alternative embodiment (not shown), the fibre may be provided with a plurality of temperature sensors spaced at periodic intervals along its length to allow the surgeon to simultaneously monitor the temperature of the target and adjacent tissues.

Figure 33 illustrates a sectional view through another embodiment of optic fibre (320) in which a collar (322) shrouding one or more temperature sensors (316) surrounds the fibre (320). The collar (322) may be slidably manipulated by the surgeon from a retracted position (as shown) to a protracted position indicated in dotted outline (324) to allow the surgeon to measure the temperature of

the body tissue at any point along the length of the fibre (320). The collar may optionally be provided with readable-depth markings as described earlier with reference to Figure 29 and/or treated to render it more echogenic to ultrasound imaging, for example, the collar may be formed of a plastics material having embedded therein metal particles.

Figures 34 to 39 illustrate a series of fibres incorporating anchoring means to facilitate the secure retention of the fibres at the target site (whether it be in the prostate, bladder, kidney, breast, brain, lung, uterus, adrenal gland, skin, liver, pancreas, gut etc. Such means allow for the temporary anchoring of the fibre (or the cannula or delivering tube of the aforesaid applicator devices - see Figures to 7 to 19 if the anchoring means are applied to them) during treatment, after which, the anchoring means may be released or stowed or otherwise rendered inactive to allow the fibre to be removed or repositioned with further activation of the anchoring means when the next suitable position of the fibre has been achieved.

Referring to Figure 34, the optic fibre (326) is provided with an inflatable balloon (328), typically of about 1 to 5 cm^3 volume, which is inflated once the fibre (326) is located at the target site to anchor the fibre (326) in position. In the embodiment shown, the balloon (328) is provided on the outer cladding (300) of the fibre (326), although a separate collar of the type described

earlier with reference to Figure 33 could also be used. The balloon (328) is inflated by passing a fluid, ordinarily water, saline or similar physiologically compatible fluid, through a delivery tube (330) into the balloon (328). The proximal end of the delivery tube (330) is normally connected to a syringe (not shown) to allow the surgeon to inflate/deflate the balloon (328) as desired.

Figures 35 to 38 illustrate a series of closely related optic fibres (332 to 338) in which an anchoring member, either affixed to or embedded in the outer cladding of the fibre (or alternatively provided on a collar described earlier with reference to Figure (33)), can be manipulated by the surgeon from a 'collapsed' state, in which it lies substantially flush with the fibre, to an anchoring position, in which the anchoring member projects into the body tissue, thereby securing the fibre in position. The anchoring member may take a wide range of forms including the 'cage' (340) of Figures 35 and 35a, the 'wing' (342) of Figure 36, the 'spike' (344) of Figure 37 and the 'hook' (346) of Figure 38. The anchoring members (340 to 344) may be made of metal, e.g., a memory alloy, or plastic, and are typically erected/collapsed by the surgeon pushing or pulling on a control wire (348) extending along the fibre (332 to 338).

Figure 39 illustrates a further embodiment of optic fibre (350) having a 'lockable/tightening' bead (352) that can be freely pushed along the fibre (350) until it abuts a suitable anatomical landmark, such as the rectal mucosa,

whereupon it can be locked/tightened onto the fibre (350), thereby aiding the maintenance of the fibre (350) at the target position. The bead (352) may be palpable to further indicate to the surgeon that the fibre (350) is correctly positioned. The bead (352) may be treated to render it more echogenic as described earlier with reference to Figures 30 and 31.

Figure 40 illustrates the implantation of a optic fibre (354) incorporating an anchoring member (342) in the form of a 'wing'. The fibre (354) is loaded in an applicator device (356) of the type described previously with reference to Figure 9. Once the applicator device (356) has been correctly positioned, the fibre (354) is protruded from the delivering tube (358) by drawing the body portions (360 and 362) of the housing together as indicated. The anchoring member (342) may be spring-biased to the anchoring position (as shown) or, alternatively, the surgeon may operate a control wire as described previously with reference to Figures 28 to 32. The surgeon then relaxes his or her grip on the device (356) allowing the fibre (354) to partially retract, until the anchoring member (342) abuts the delivery tube (358) as shown, preventing further retraction. Once the treatment has been completed, the fibre (354) is stowed by, in the case of a spring-biased member, forcibly retracting the fibre (354) into the delivery tube (358) or, in the case of a wire-controlled anchoring member by appropriate manipulation of the control wire.

Figure 41 illustrates a further embodiment of optic fibre (364) in which a steering wire (366) is attached to or embedded in the outer cladding (300) at the remote end of the fibre (364). The proximal end of the steering wire (366) is attached to a suitable control unit (not shown) operable by the surgeon to control the extent of deflection into the target tissue.

The use of each of the aforesaid devices may be cumulative with any of the other devices of the present invention.

CLAIMS:

1. A catheter dimensioned for insertion into the body and having thereon a balloon, the catheter further comprising an inlet and outlet to the balloon to allow pressurisation/inflation of said balloon and the circulation of a cooling fluid into and out of said balloon to effect cooling of the outer surface thereof.

2. A balloon-catheter as claimed in claim 1 in which the cooling fluid is responsible for pressurising/inflating the balloon.

3. A balloon-catheter as claimed in Claim 1 or Claim 2 further comprising at least two conduits disposed along the catheter and arranged for transporting cooling fluid to and from the balloon.

4. A balloon-catheter as claimed in any one of Claims 1 to 3 in which the balloon is designed to accommodate pressures of up to 10 atmospheres (1.01×10^6 Nm^{-2}).

5. A balloon-catheter as claimed in any preceding Claim further comprising one or more conduits disposed along the catheter and arranged so as to allow the site of insertion to be flushed with a local anaesthetic gel or solution.

6. A balloon-catheter as claimed in any preceding Claim in which the outer surface of the balloon is textured so as to retain an anaesthetic gel or solution thereon.

7. A balloon-catheter as claimed in any preceding Claim further comprising one or more conduits disposed along the catheter adapted to receive viewing means to allow the surgeon to monitor the insertion manoeuvre and/or the site of insertion.

8. A balloon-catheter as claimed in any preceding Claim in which the catheter is dimensioned for insertion into the urethra.

9. A balloon-catheter as claimed in any preceding Claim in which the balloon is dimensioned so as to be capable of compressing the prostate gland when inserted into the prostatic fossa.

10. A balloon-catheter as claimed in Claim 8 or Claim 9 in which the catheter is provided with a smaller, secondary balloon located proximal to the main balloon through which the cooling fluid is also circulated to provide cooling for the distal urethral sphincter muscle.

11. A balloon-catheter as claimed in any one of Claims 8 to 10 in which the catheter is provided with a smaller secondary balloon located distal to the main balloon through which the cooling fluid is also circulated to provide cooling for the proximal urethral sphincter muscle.

12. A balloon-catheter as claimed in any preceding Claim configured so as to facilitate the delivery and temporary implantation of and/or the secure retention of an optic fibre or other heat generating probe into a given tissue or organ of the body.

13. A balloon-catheter as claimed in Claim 12 in which said probe is slidably manipulated through the catheter into the target tissue.

14. A balloon-catheter as claimed in Claim 12 or Claim 13 further comprising means for implanting said probe into the target tissue.

15. A balloon-catheter as claimed in Claim 14 in which said implantation means comprises a needle-tipped canula which is slidably manipulated through the catheter into the target tissue, said probe being slidably manipulated through the canula.

16. A balloon-catheter as claimed in any one of Claims 12 to 15 further comprising means to deflect said probe and/or the canula away from the catheter into the target tissue.

17. A balloon-catheter as claimed in any one of Claims 12 to 16 further comprising means to displace said probe predictably forwards into the target tissue or the canula predictably backwards to expose said probe once the target region has been reached.

18. A balloon-catheter as claimed in Claim 14 in which the implantation means comprises an applicator device as claimed hereinafter with reference to any one of Claims 38 to 49.

19. A balloon-catheter as claimed in any preceding Claim in which any component part thereof has been treated so as to increase its echogenicity to ultrasound imaging.

20. A balloon-catheter as claimed in any preceding Claim dimensioned such that it can be inserted into the body through the operating channel of an endoscope, resectoscope or cystoscope.

21. A balloon-catheter as claimed in any preceding Claim in which readable depth markings are provided on a component part thereof to allow the surgeon to monitor the depth of insertion into the body.

22. A balloon-catheter as claimed in any preceding Claim further comprising one or more temperature sensors to enable the surgeon to monitor the temperature of the body tissue(s).

23. A balloon-catheter as claimed in any one of Claims 12 to 22 in which the optic fibre is as claimed hereinafter with respect to Claims 53 to 65.

24. A balloon-catheter as claimed in Claim 1 substantially as herein described with reference to any of Figures 2 to 6.

25. A method of heat treating the body in which thermal energy is delivered to a target body tissue characterised in that a balloon-catheter as claimed in any one of Claims 1 to 24 is inserted into the body and cooling fluid is circulated through the balloon-catheter to effect cooling of non-target tissue or organs in close proximity to the target tissue.

26. A method as claimed in Claim 25 in which the target body tissue is the prostate gland and the balloon-catheter is positioned such that the balloon lies within

the prostatic fossa.

27. A method as claimed in Claim 26 in which the balloon is dimensioned such that when inflated it compresses the prostatic tissue.

28. A method as claimed in any one of Claims 25 to 27 in which the balloon is inflated to a pressure of from 2 to 5 atmospheres (2.02×10^5 to 5.05×10^5 Nm^{-2}).

29. A method as claimed in any one of Claims 26 to 28 in which the tissue to be treated is a prostatic cancer or enlarged prostatic tissue caused by benign prostatic hypertrophy.

30. A method as claimed in any one of Claims 26 to 29 in which the balloon-catheter provides cooling for the lining of the urethra, the wall of the rectum, the proximal sphincter muscle and/or the distal sphincter muscle.

31. A method as claimed in any one of Claims 26 to 30 in which the balloon-catheter is inserted into the body through the operating channel of an endoscope, resectoscope or cystoscope.

32. A method as claimed in any one of Claims 25 to 31 in which an optic fibre or other heat generating probe is inserted into the body either percutaneously or through an appropriate body cavity for the purpose of delivering laser/thermal energy to the target tissue.

33. A method as claimed in Claim 32 in which said probe is slidably manipulated through the catheter into the target tissue.

34. A method as claimed in Claim 33 in which the balloon-catheter further comprises means for implanting said probe into the target tissue.

35. A method as claimed in any one of Claims 32 to 34 in which the movement of said probe is directed via real-time feedback from visual ultrasound images of the thermal-tissue effect.

36. A method of heat treating the body as claimed in any one of Claims 25 to 35 in which the cooling fluid is water, saline or any other physiologically compatible fluid.

37. A method as claimed in Claim 25 substantially as herein described.

38. An applicator device for inserting an optic fibre or other heat generating probe into the body, the device comprising:

a housing adapted to be held by the surgeon;

an elongate delivery tube adapted to be inserted into the body, one end of which is mounted in said housing;

said optic fibre or other heat generating probe being disposed within the delivery tube, and

means to protrude the optic fibre or probe from the delivery tube or means to retract the delivery tube over the static optic fibre or probe so as to expose the fibre/probe.

39. An applicator device as claimed in Claim 38 in which the optic fibre or probe is shrouded by a needle-

tipped cannula likewise disposed within the delivery tube and which can be protruded or retracted so as to expose the probe/fibre.

40. An applicator device as claimed in Claim 38 or Claim 39 in which at least one of the delivery tube, canula and optic fibre or probe is separable from the remainder of the device which can be withdrawn from the body leaving said separable component in place within the body.

41. An applicator device as claimed in any one of Claims 38 to 40 in which at least a portion of the delivery tube and/or canula has been treated so as to render it more echogenic to ultrasound location.

42. An applicator device as claimed in any one of Claims 38 to 41 in which at least a portion of the delivery tube and/or canula is provided with readable markings to allow the surgeon to determine the depth of insertion into the body.

43. An applicator device as claimed in any one of Claims 38 to 42 further comprising means to flush an irrigant through the delivery tube.

44. An applicator device as claimed in any one of Claims 38 to 43 further comprising means to deflect the emerging optic fibre or probe and/or canula away from the delivery tube.

45. An applicator device as claimed in any one of Claims 38 to 44 further comprising viewing means to allow the surgeon to monitor the insertion manoeuvre and/or the

site of insertion.

46. An applicator device as claimed in any one of Claims 38 to 45 in which the delivery tube and/or the canula is provided with anchoring means to facilitate their temporary anchorage within the body.

47. An applicator device as claimed in any one of Claims 38 to 46 in which the delivery tube is provided with a inflatable balloon, the delivery tube further comprising an inlet and outlet to the balloon to allow the pressurisation/inflation of the balloon and/or the circulation of a cooling fluid into and out of the balloon.

48. An applicator device as claimed in any one of Claims 38 to 47 in which the optic fibre is as claimed hereinafter with reference to any one of Claims 53 to 65.

49. An applicator device as claimed in Claim 38 substantially as herein described with reference to any one of Figures 7 to 19.

50. The combination of a balloon-catheter as claimed in any one of Claims 1 to 24 and an applicator device as claimed in any one of Claims 38 to 49.

51. A method of heat or photo-treating a given tissue or organ of the body in which an optic fibre or other heat generating probe is inserted, either percutaneously or through an appropriate body cavity into the target tissue or organ using an applicator device as claimed in any one of Claims 38 to 49 for the purpose of delivering laser/thermal energy thereto.

52. A method of heat or photo-treating a given tissue or organ of the body as claimed in Claim 51 substantially as herein described.

53. An optic fibre for use in the heat and/or photo-treatment of a given tissue or organ within the body, said fibre comprising a core having thereon a cladding and comprising one or more of the following:

(a) means to facilitate the accurate positioning of the fibre within the body;

(b) steering means to allow the direction of fibre travel within the body to be controlled;

(c) means to facilitate the temporary anchoring of the fibre in the body, and

(d) one or more temperature sensors disposed along the fibre to allow the temperature of target and/or non-target tissue(s) to be monitored.

54. An optic fibre as claimed in Claim 53 in which said positioning means (a) comprises treating at least a portion of the fibre so as to render it more echogenic to ultrasound location.

55. An optic fibre as claimed in Claim 53 or Claim 54 in which said positioning means (a) comprises providing at least a portion of the fibre with an ultrasound emitter to aid its ultrasound location.

56. An optic fibre as claimed in any one of Claims 53 to 55 in which said positioning means (a) comprises providing at least a portion of the fibre with a plurality of readable markings to allow the depth of

insertion to be determined.

57. An optic fibre as claimed in any one of Claims 54 to 56 in which said portion includes at least the remote end of the fibre.

58. An optic fibre as claimed in any one of Claims 53 to 57 in which said positioning means (a) comprises a self-tightening or lockable bead which is slidably disposed along said fibre so as to abut a suitable anatomical landmark.

59. An optic fibre as claimed in Claim 58 in which said bead is palpable.

60. An optic fibre as claimed in any one of Claims 53 to 59 in which said steering means (b) comprises one or more steering wires embedded in the remote end of the fibre and disposed along the length thereof and arranged such that by appropriate manipulation of said wire(s) the direction of travel of the fibre can be controlled.

61. An optic fibre as claimed in any one of claim 53 to 60 in which said anchoring means (c) comprises an inflatable balloon arranged such that, when the fibre is inserted into said tissue or organ, the balloon can be temporarily inflated to secure the fibre in position for the duration of the treatment.

62. An optic fibre as claimed in any one of Claims 53 to 60 in which said anchoring means (c) comprises a protrudable anchoring member disposed on the fibre and arranged such that, when the fibre is inserted into said tissue or organ, the anchoring member can be temporarily

protruded into the target tissue to secure the fibre in position for the duration of the treatment.

63. An optic fibre as claimed in Claim 62 in which the anchoring member is in the form of a wing, cage, spike or hook.

64. An optic fibre as claimed in any one of Claims 53 to 63 further comprising a collar enshrouding at least a portion of the fibre, the collar bearing the one or more features (a) to (d).

65. An optic fibre as claimed in Claim 53 substantially as herein described with reference to any of Figures 29 to 41.

66. A method of heat or photo-treating a given tissue or organ of the body in which an optic fibre as claimed in any one of Claims 53 to 65 is inserted into the body, either percutaneously or through an appropriate body cavity, for the purpose of delivering laser radiation thereto.

67. A method of heat or photo-treating a given tissue or organ of the body as claimed in Claim 66 substantially as herein described.

68. A cooling jacket for an ultrasound probe adapted to be inserted into the body of a patient, the jacket comprising an outer sleeve defining a central space and having an opening at one end to allow the remote end of the ultrasound probe to be inserted into the central space, the opening being dimensioned such that the sleeve has a sealing fit about the ultrasound

probe, the jacket further comprising an inlet and an outlet to allow pressurisation/inflation of the jacket and the circulation of a cooling fluid through the jacket to effect cooling of the outer sleeve.

69. A cooling jacket as claimed in Claim 68 in which the cooling fluid is responsible for pressurising/inflating the jacket.

70. A cooling jacket as claimed in Claim 68 or Claim 69 further comprising at least two conduits arranged for transporting cooling fluid to and from the jacket.

71. A cooling jacket as claimed in any one of Claims 68 to 70 in which the ultrasound probe is dimensioned for insertion into the rectum of a patient and the cooling jacket is sized such that, when inflated, the outer sleeve of the jacket contacts the walls of the rectum.

72. A cooling jacket as claimed in any one of Claim 68 to 71 configured so as to facilitate the delivery and temporary implantation of and/or the secure retention of an optic fibre or other heat generating probe into a given tissue or organ of the body.

73. A cooling jacket as claimed in Claim 72 further comprising at least one conduit extending through the jacket to a port(s) provided in the outer sleeve to allow the optic fibre or probe to be manipulated through the jacket into the target tissue or organ.

74. A cooling jacket as claimed in any one of

Claims 68 to 73 in which the jacket is provided with an inner sleeve disposed within the outer sleeve and having a complementary fit about the remote end of the ultrasound probe.

75. A cooling jacket as claimed in any one of Claim 68 to 74 in which the jacket is formed of a compliant material to permit independent movement of the ultrasound probe when inserted within the body.

76. A cooling jacket as claimed in Claim 68 substantially as herein described with reference to any one of Figures 20 to 28.

77. The combination of an ultrasound probe and a cooling jacket as claimed in any one of Claims 68 to 76.

78. A method of heat treating the body in which thermal energy is delivered to a target body tissue or organ characterised in that an ultrasound probe fitted with a cooling jacket as claimed in any one of Claims 68 to 76 is inserted into the body and cooling fluid is circulated through the jacket to effect cooling of non-target tissues or organs in close proximity thereto.

79. A method as claimed in Claim 78 in which the target body tissue is the prostate gland and the ultrasound probe is inserted into the rectum to provide cooling for the lining of the rectal wall.

80. A method as claimed in Claim 78 or Claim 79 in which an optic fibre or other heat generating probe is inserted into the target body tissue or organ through the conduit(s) provided in the cooling jacket.

81. A method as claimed in any one of Claims 78 to 80 in which movement of the optic fibre or probe is directed via real-time feedback from visual ultrasound images generated by the ultrasound probe of the thermal-tissue effect.

82. A method as claimed in Claim 78 substantially as herein described.

Fig.1.

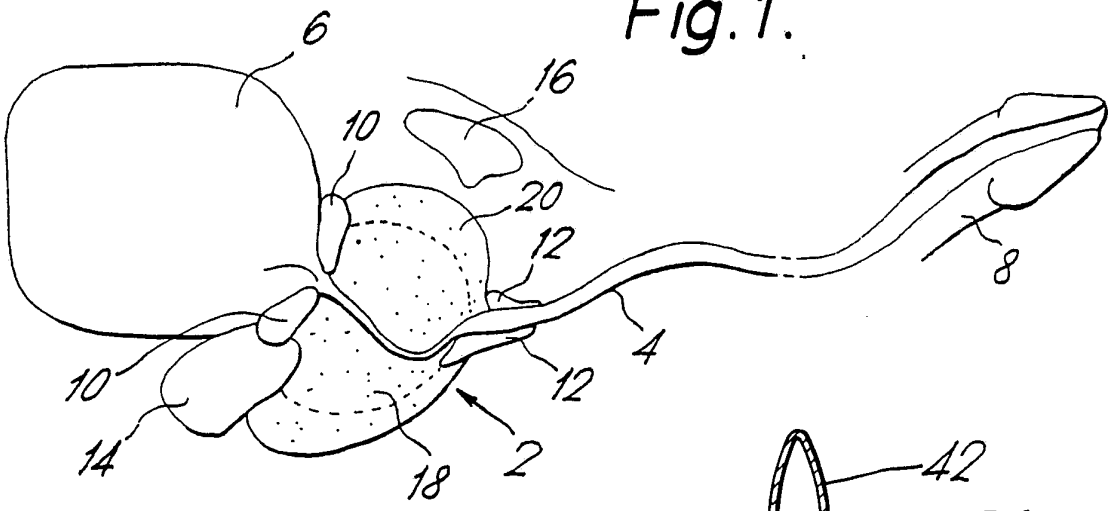

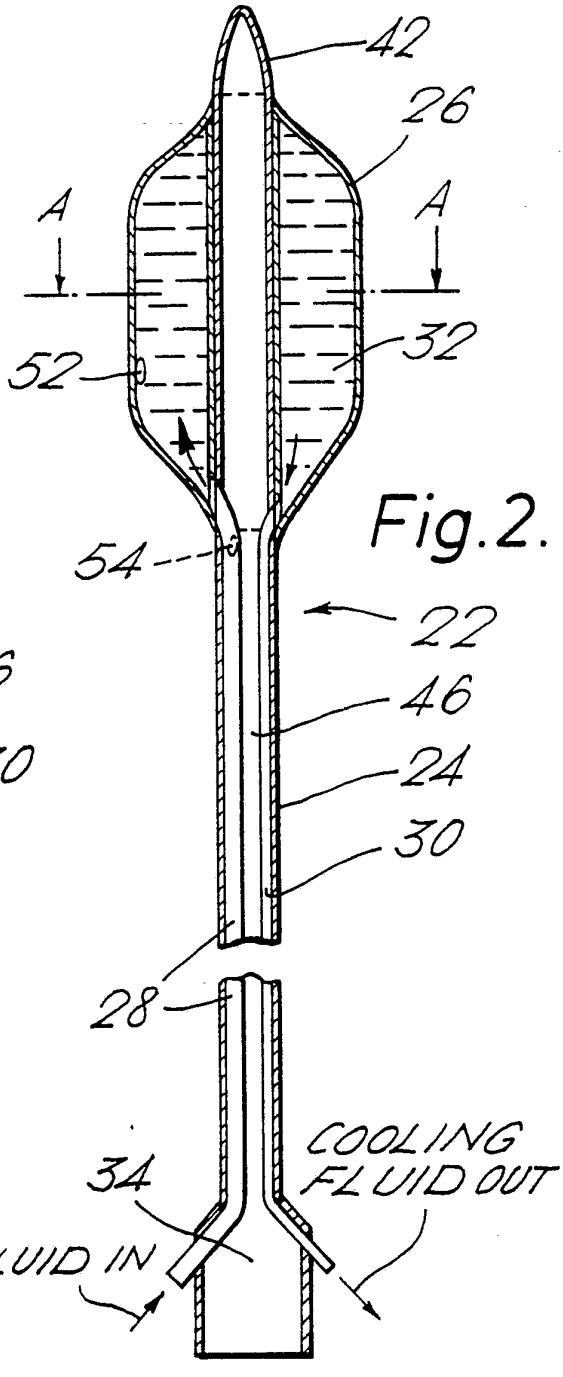

Fig.2.

Fig.3.

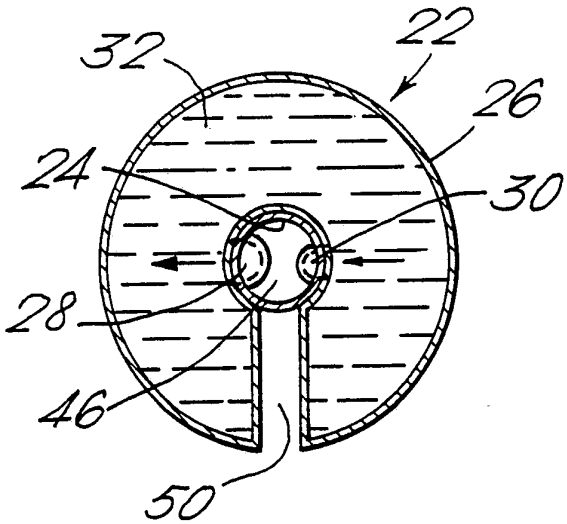

Fig.4.

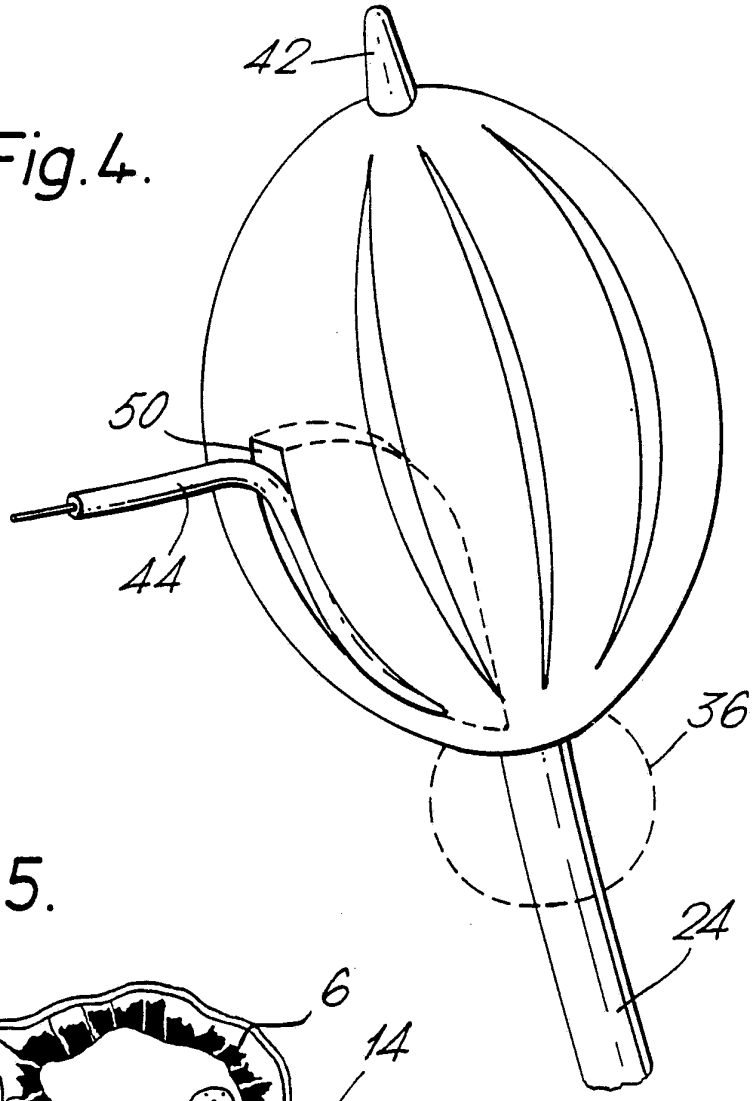

Fig.5.

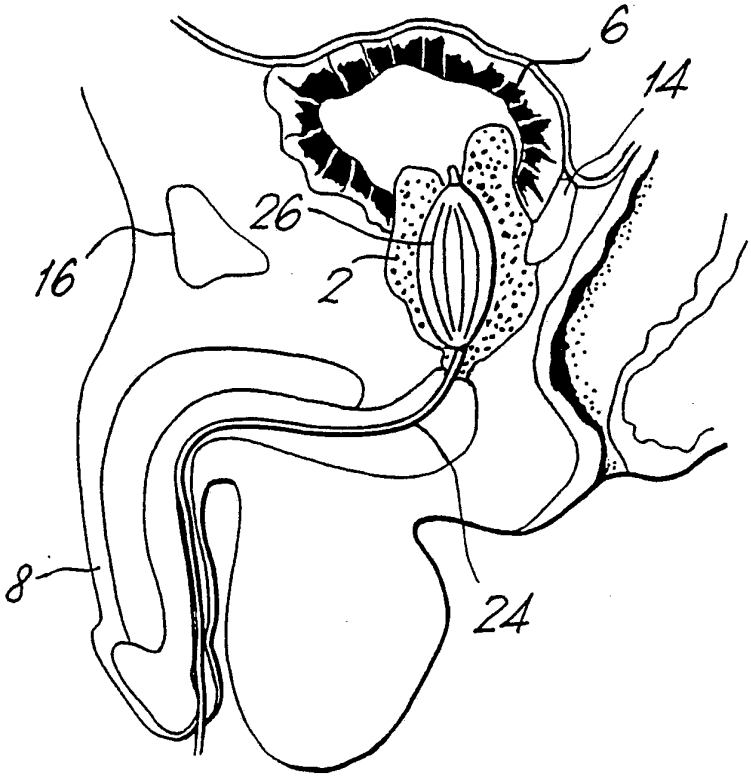

Fig.6.

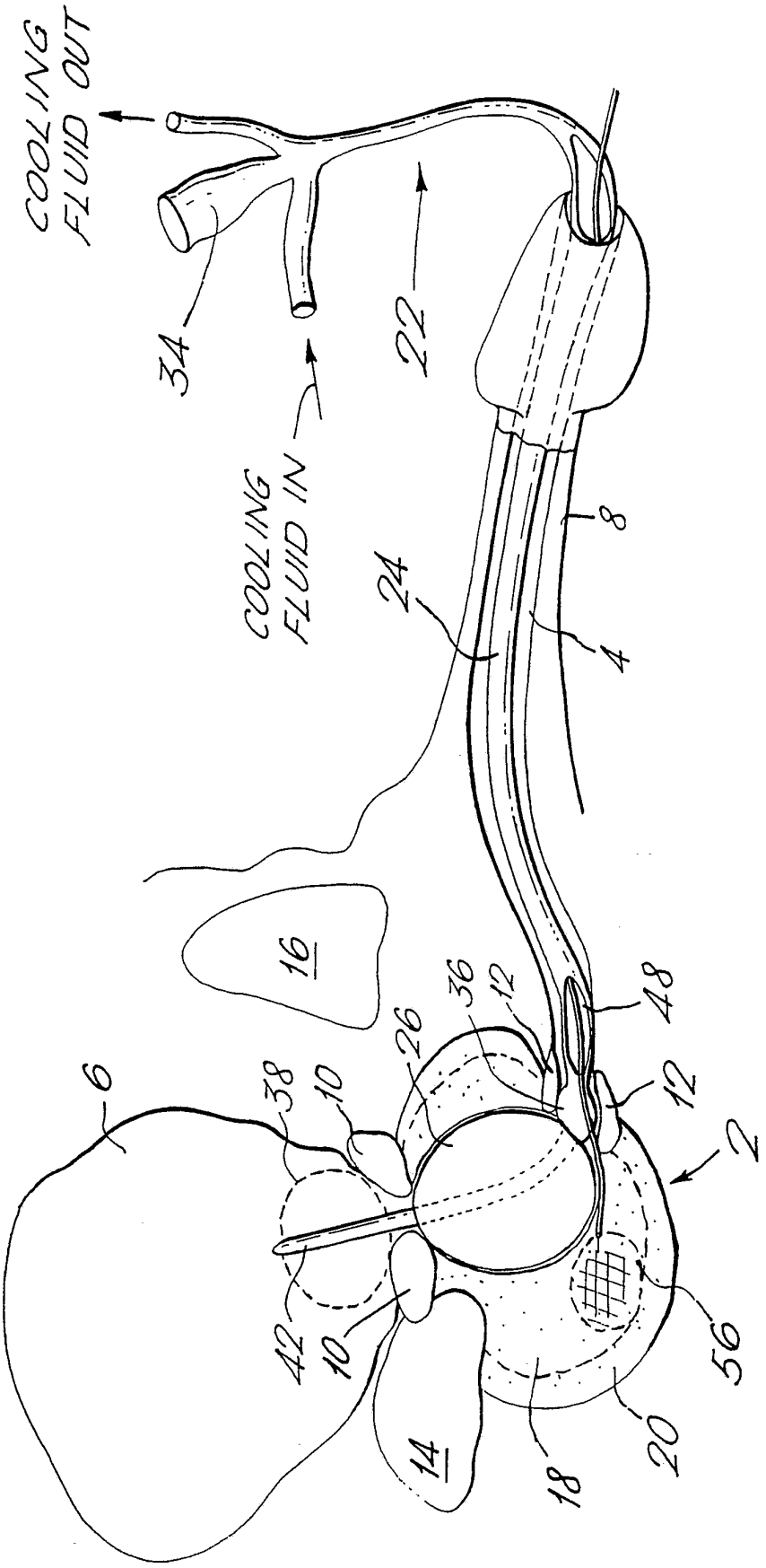
COOLING FLUID OUT
34
22
COOLING FLUID IN
24
8
4
16
36
12
48
26
6
38
10
12
2
42
10
56
14
18
20

Fig.7.

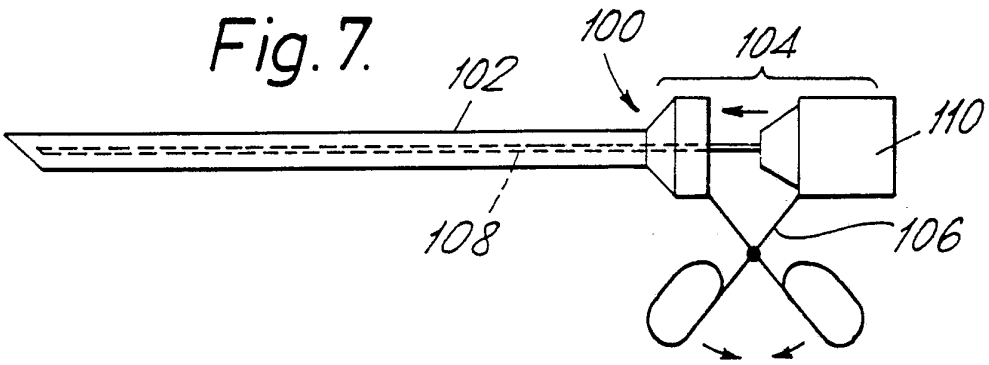

Fig.8.

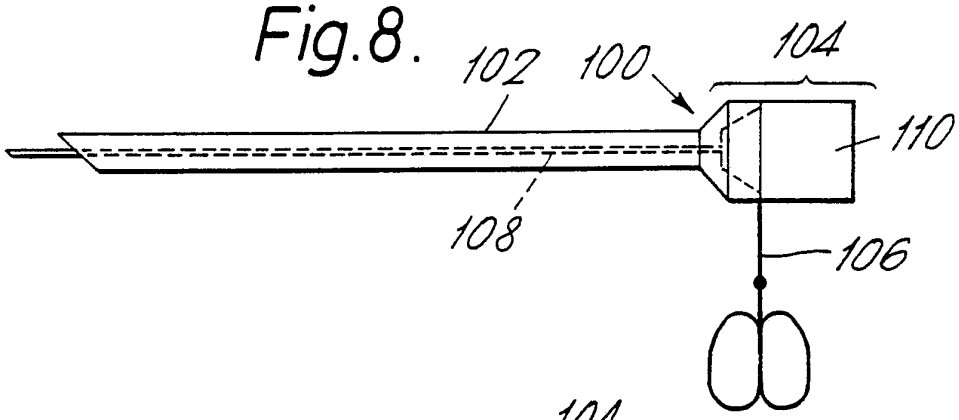

Fig.9.

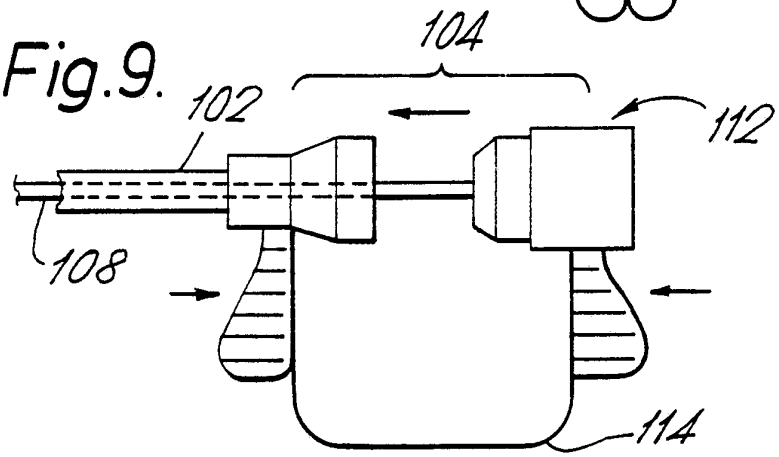

Fig.10a.

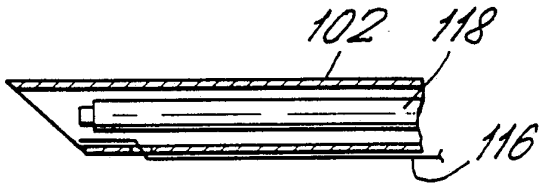

Fig.10b.

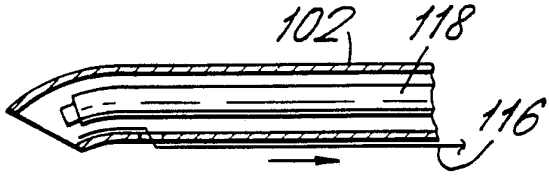

Fig. 11a.

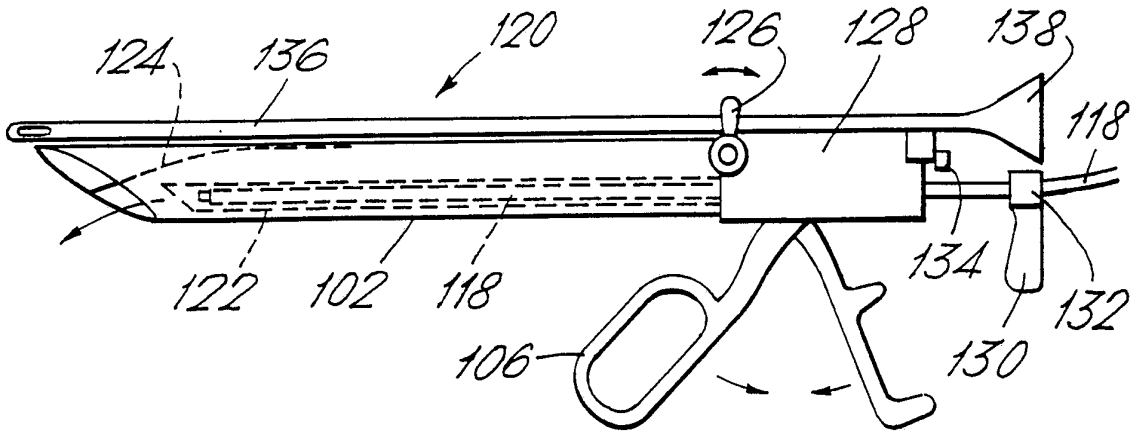

Fig. 11b.

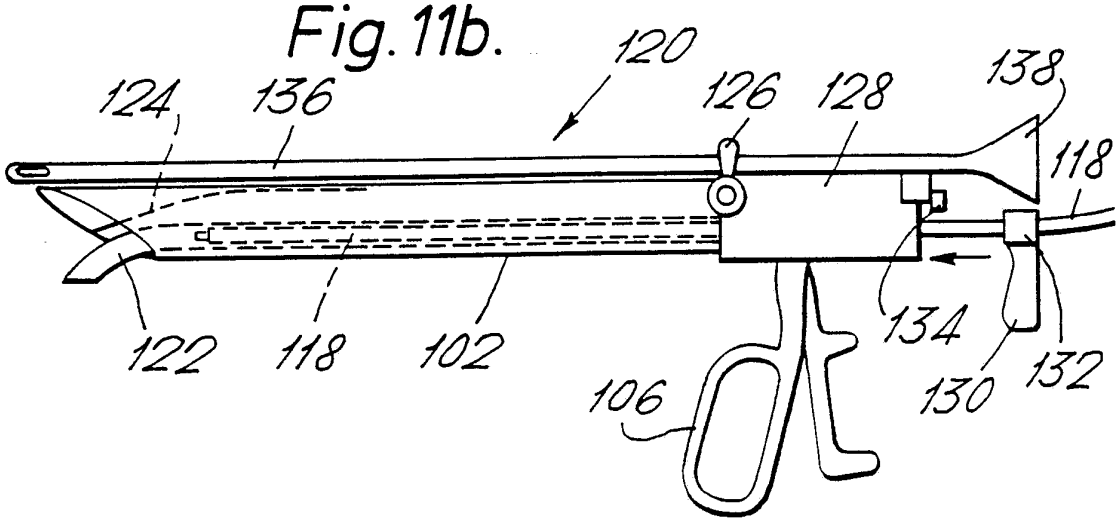

Fig. 11c.

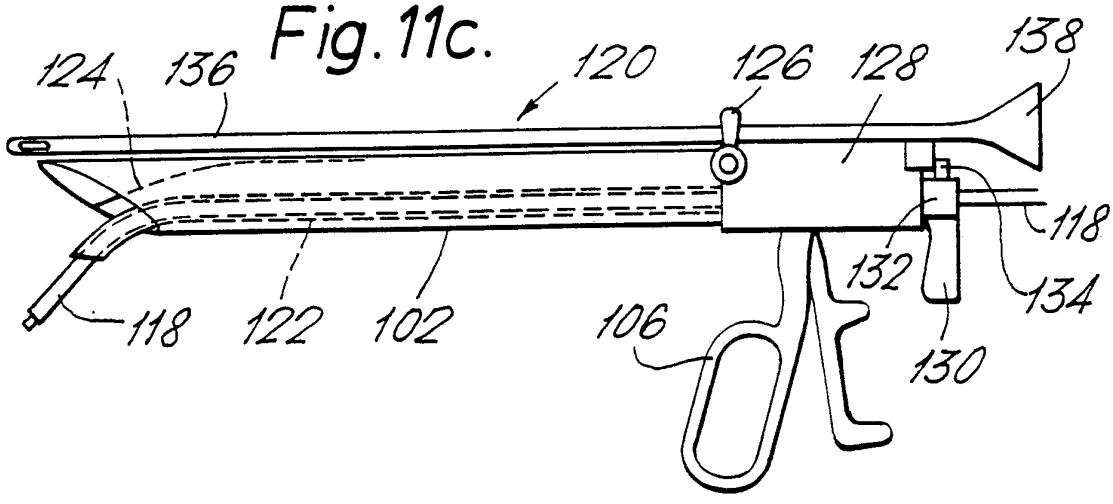

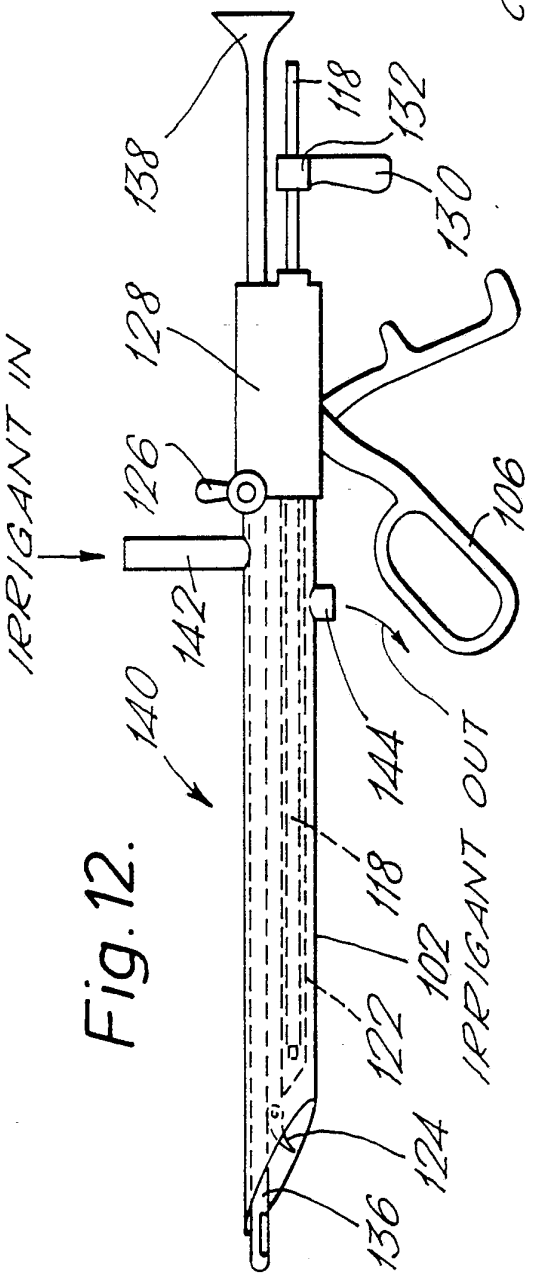
IRRIGANT IN
140
142
126
128
138
118
132
130
106
144
118
102
IRRIGANT OUT
122
124
136

Fig. 12.

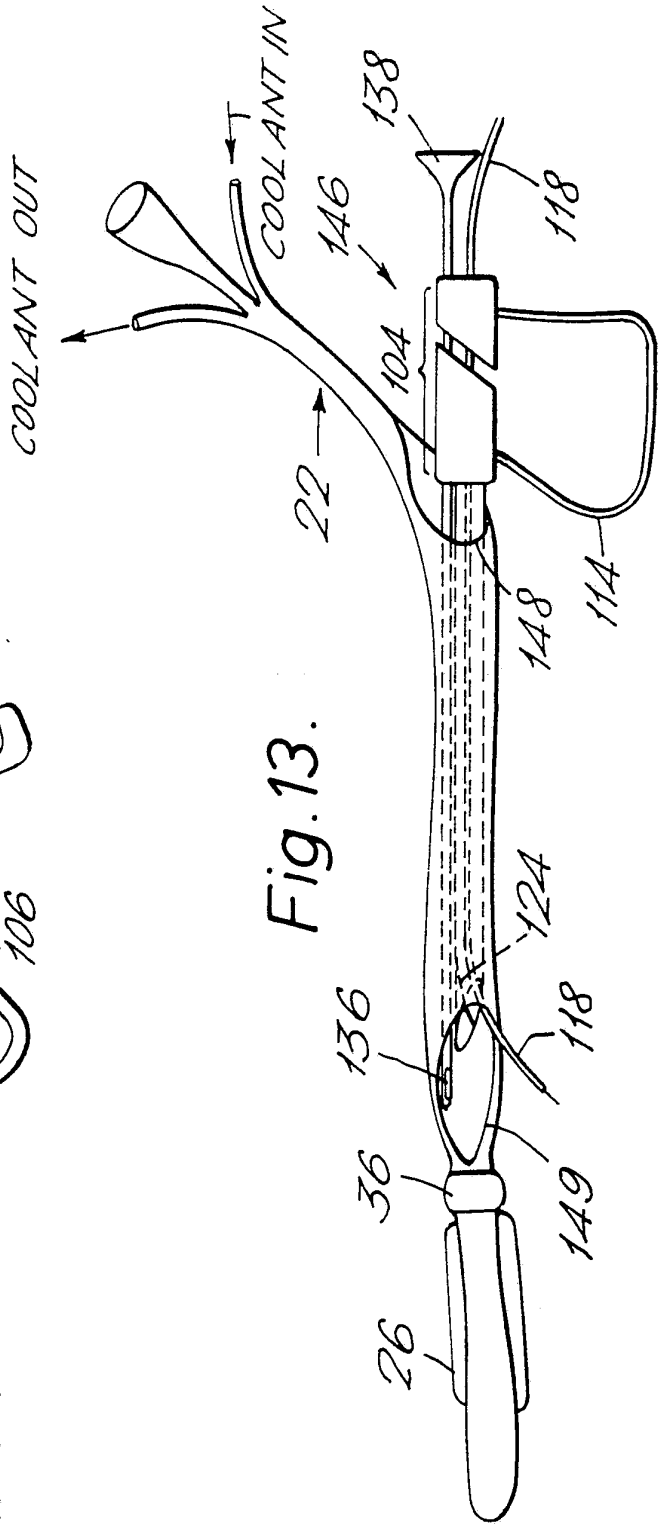
COOLANT OUT
COOLANT IN
138
146
118
104
22
114
148
124
136
118
36
149
26

Fig. 13.

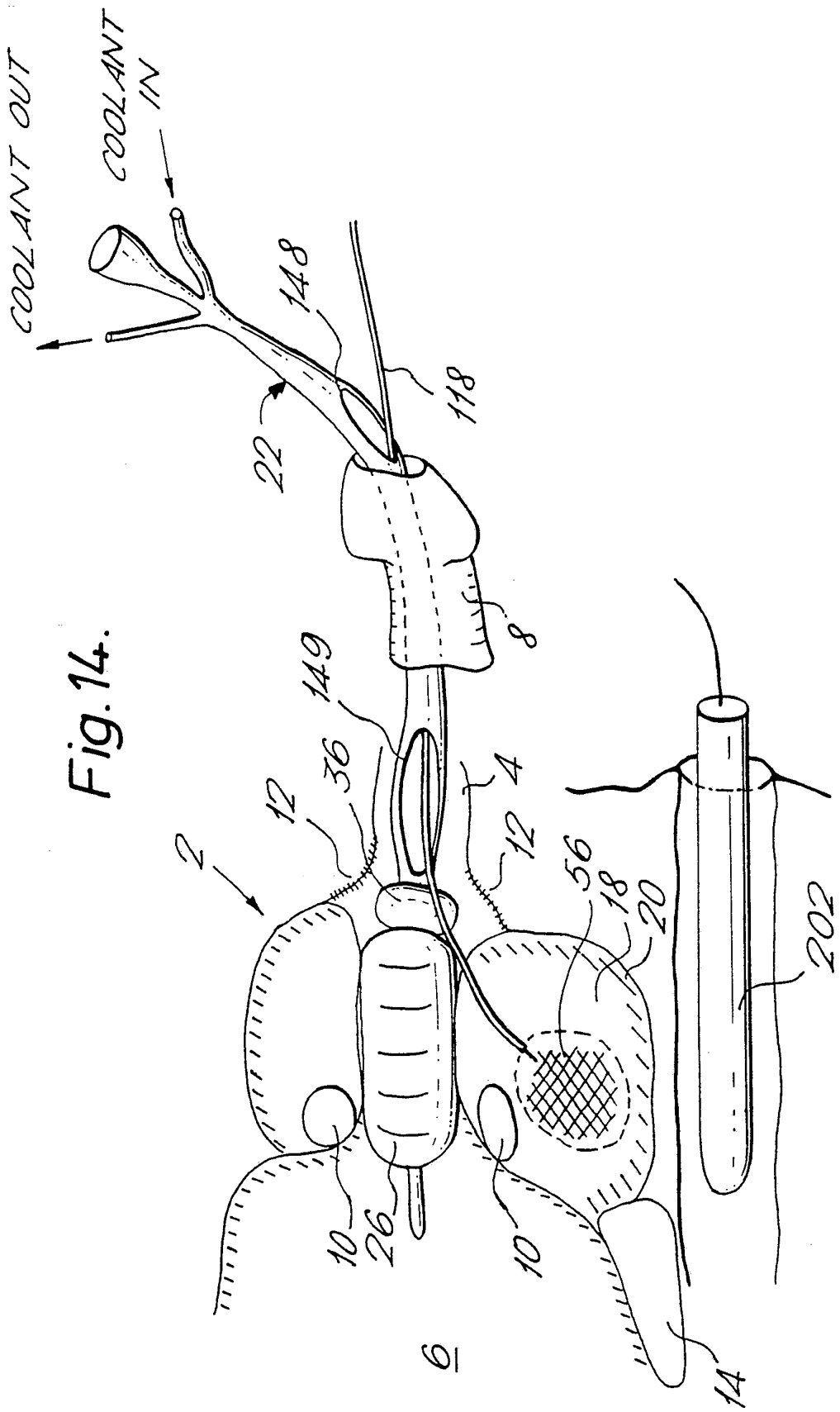
COOLANT OUT
COOLANT IN
148
118
22
8
149
36
12
4
2
12
56
18
20
202
10
26
10
6
14

Fig. 14.

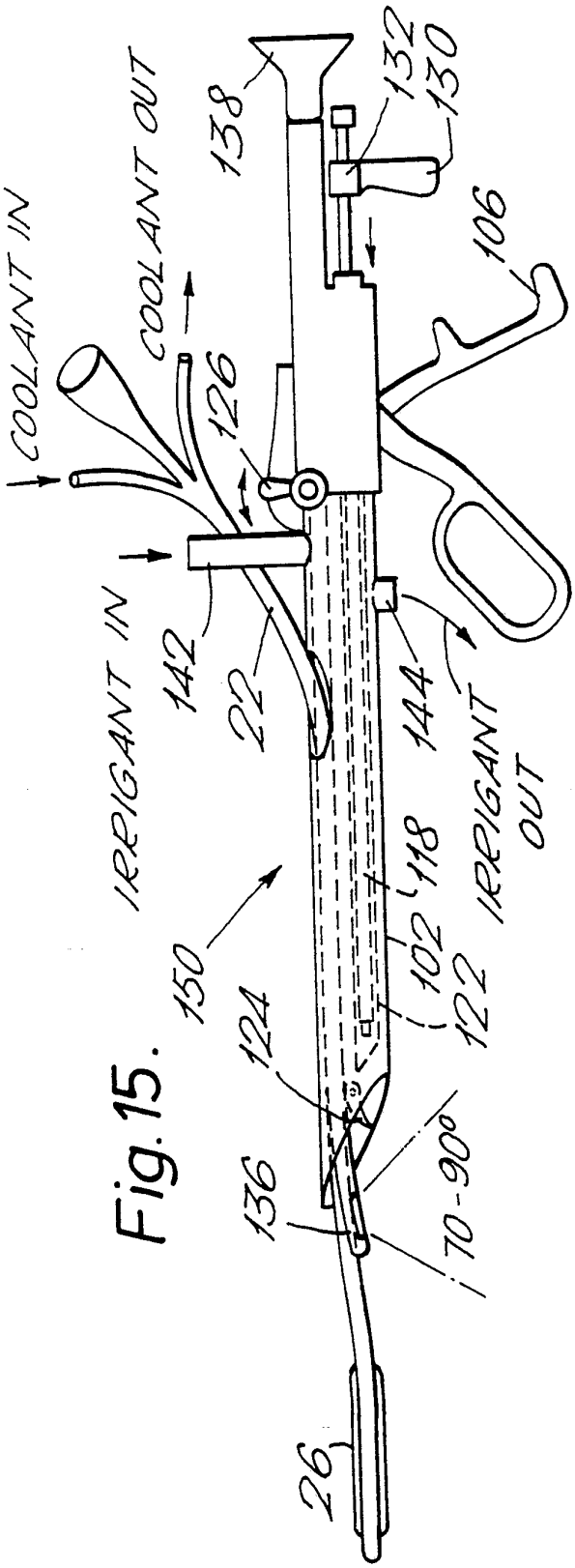

Fig. 15.

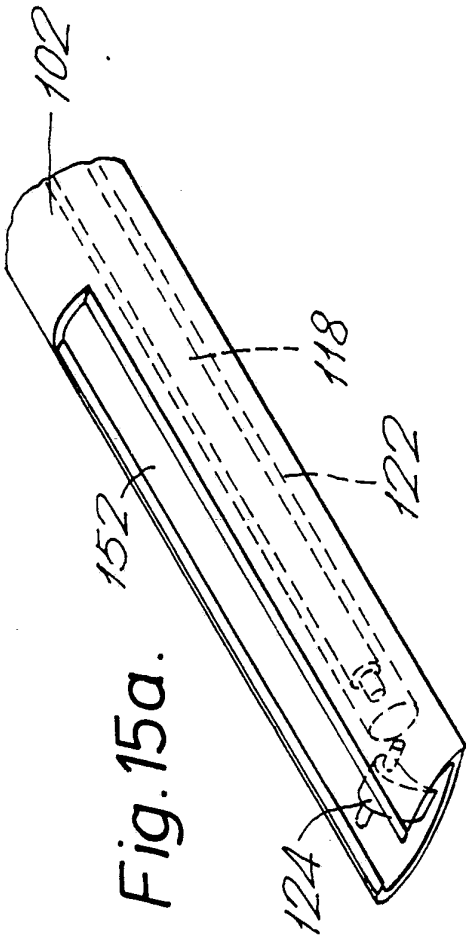

Fig. 15a.

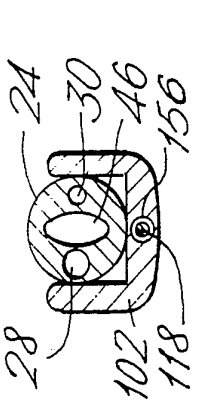

Fig.16a.

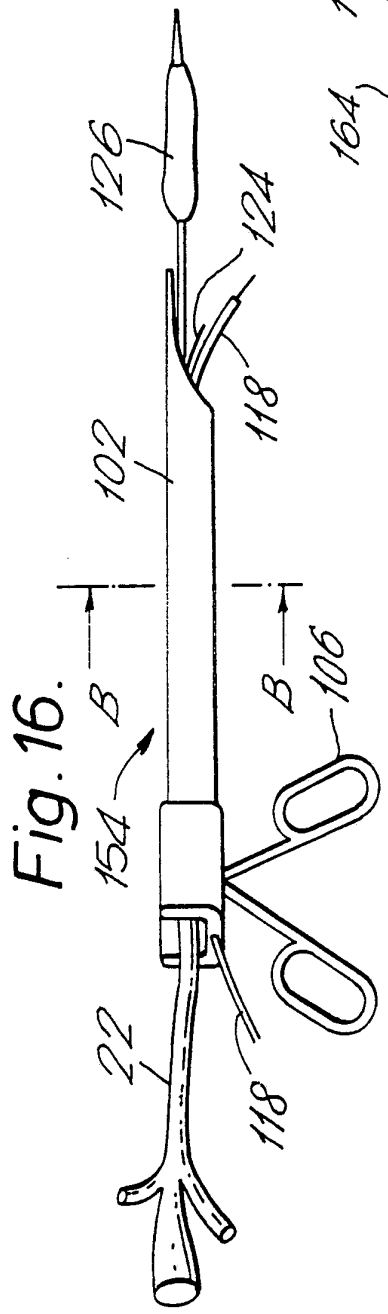

Fig.16.

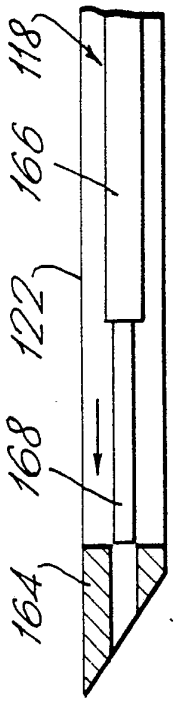

Fig.18a.

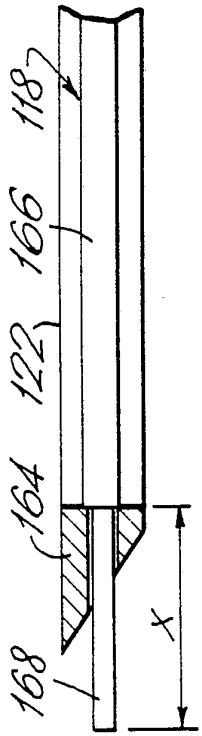

Fig.18b.

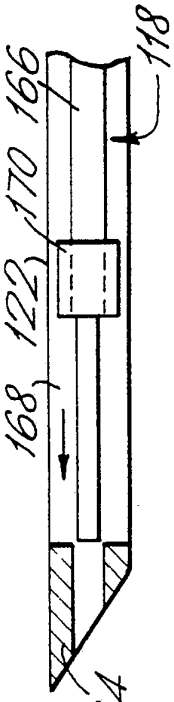

Fig.19a.

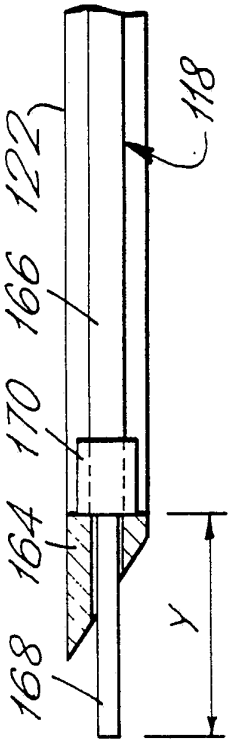

Fig.19b.

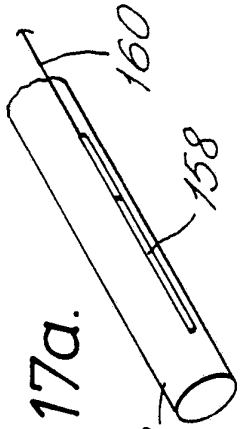

Fig.17a.

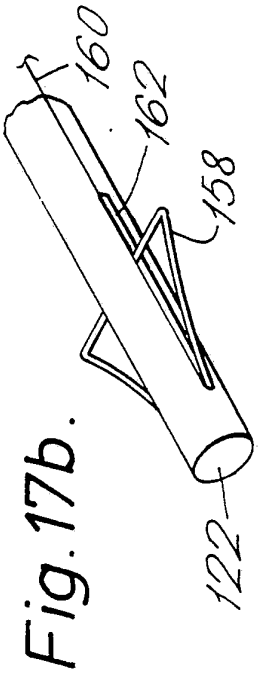

Fig.17b.

Fig.20.

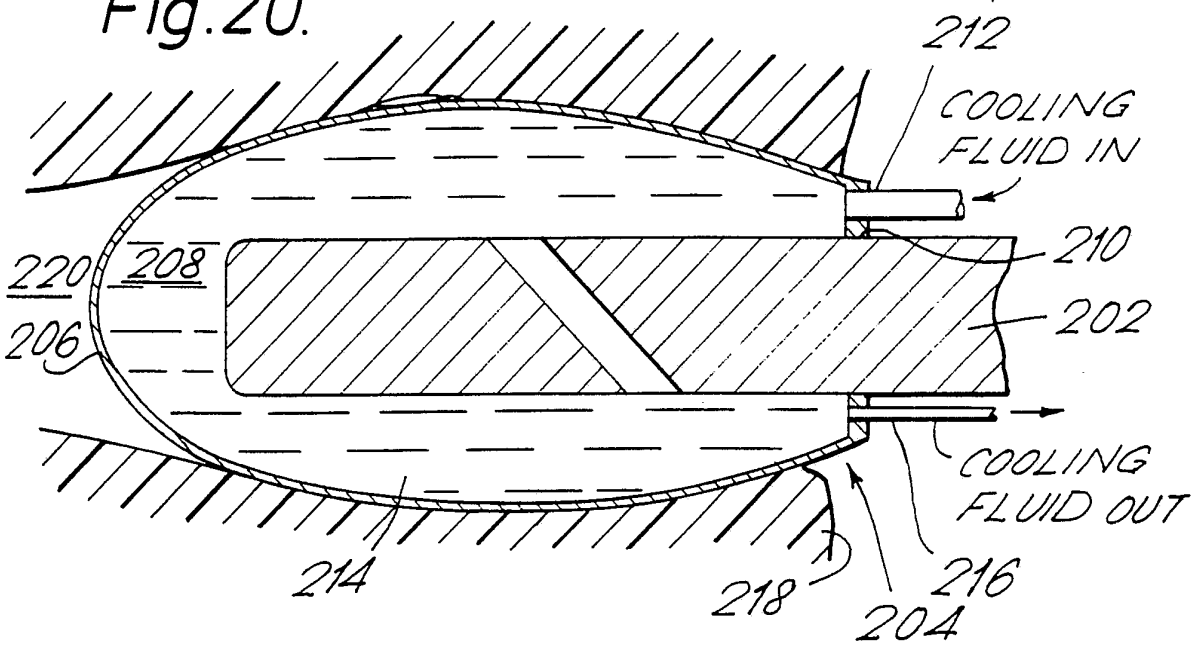

Fig.21.

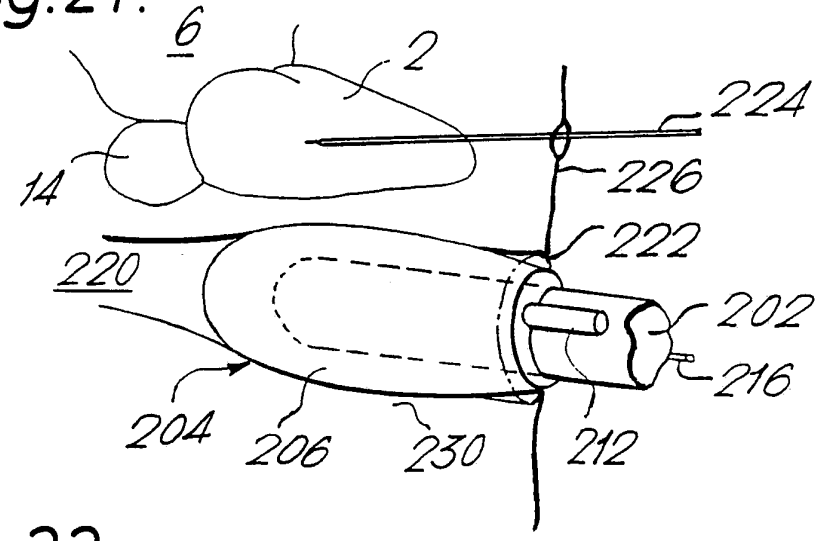

Fig.22.

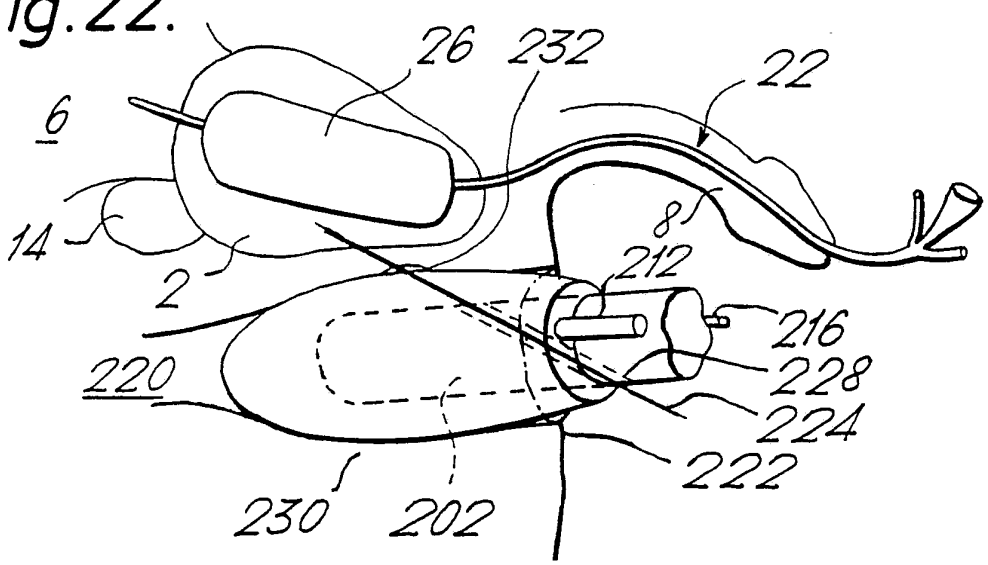

Fig.23.

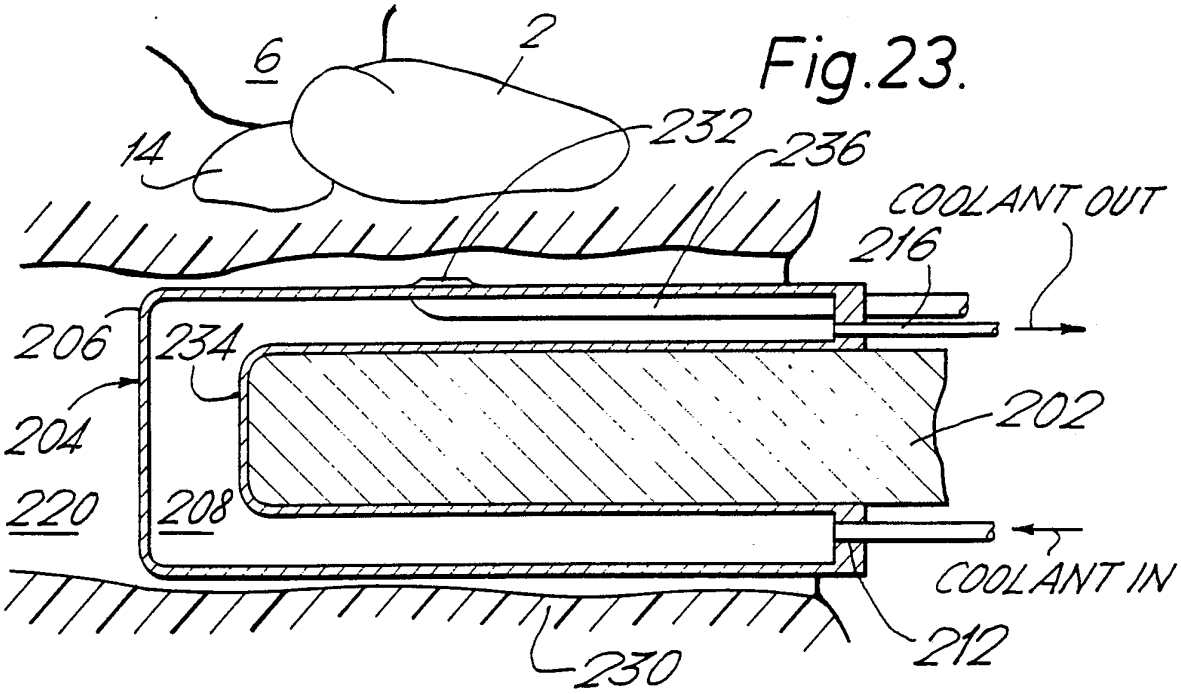

Fig.24.

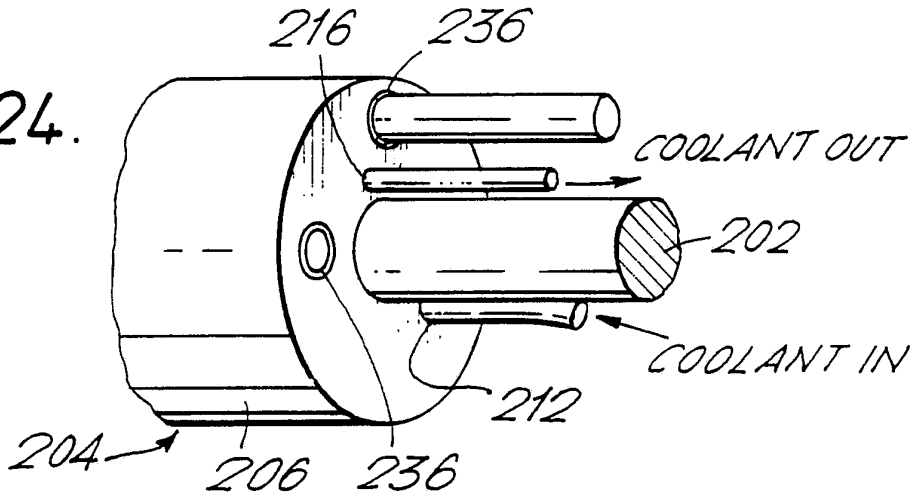

Fig.25.

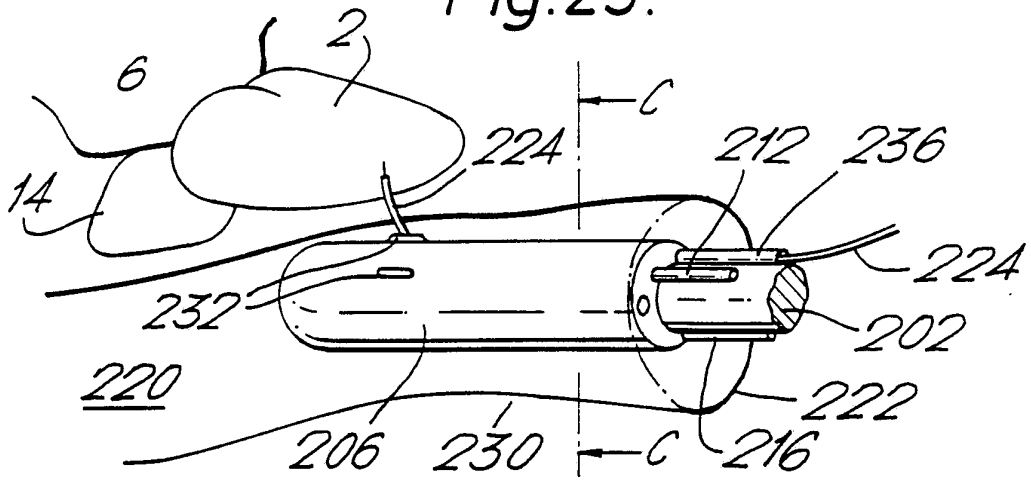

Fig.26.

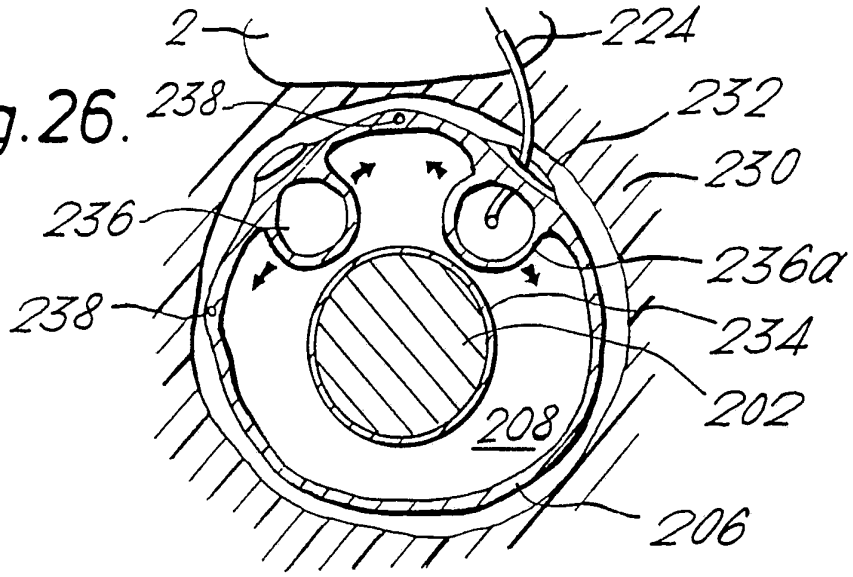

Fig.27.

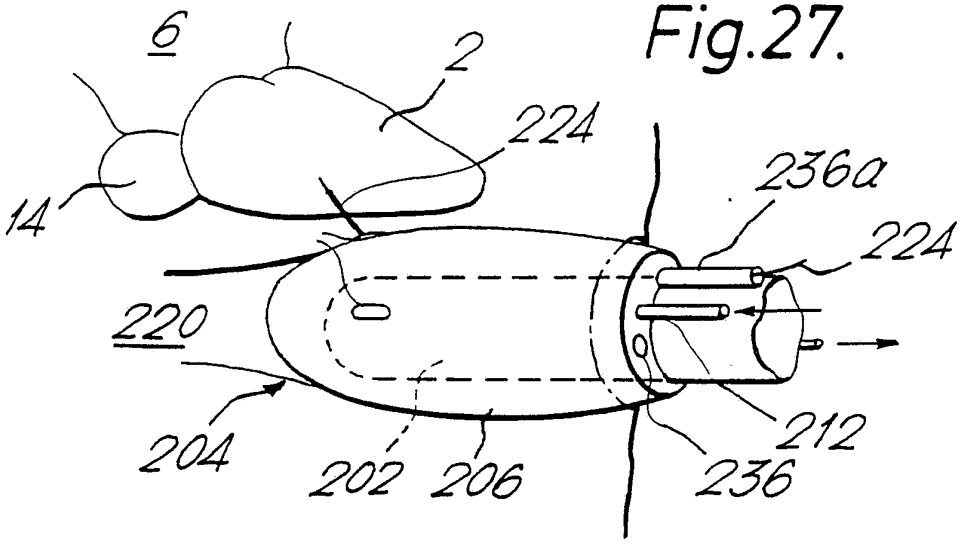

Fig.28.

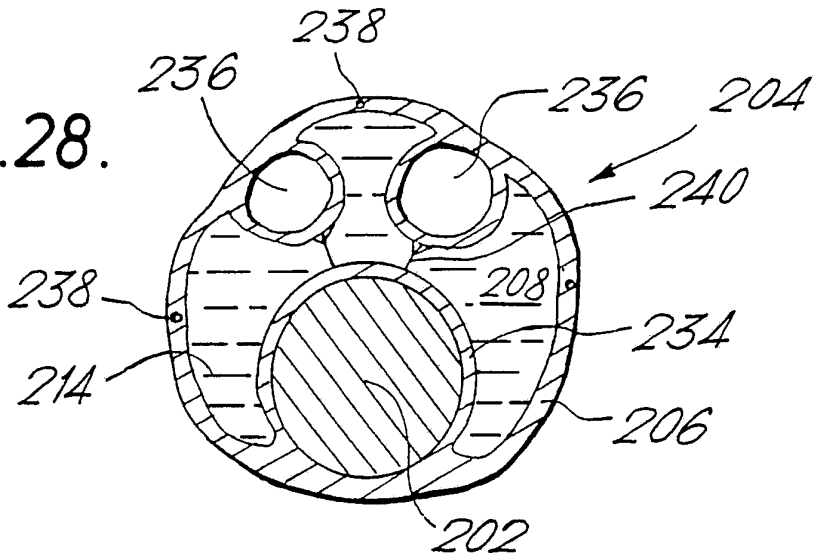

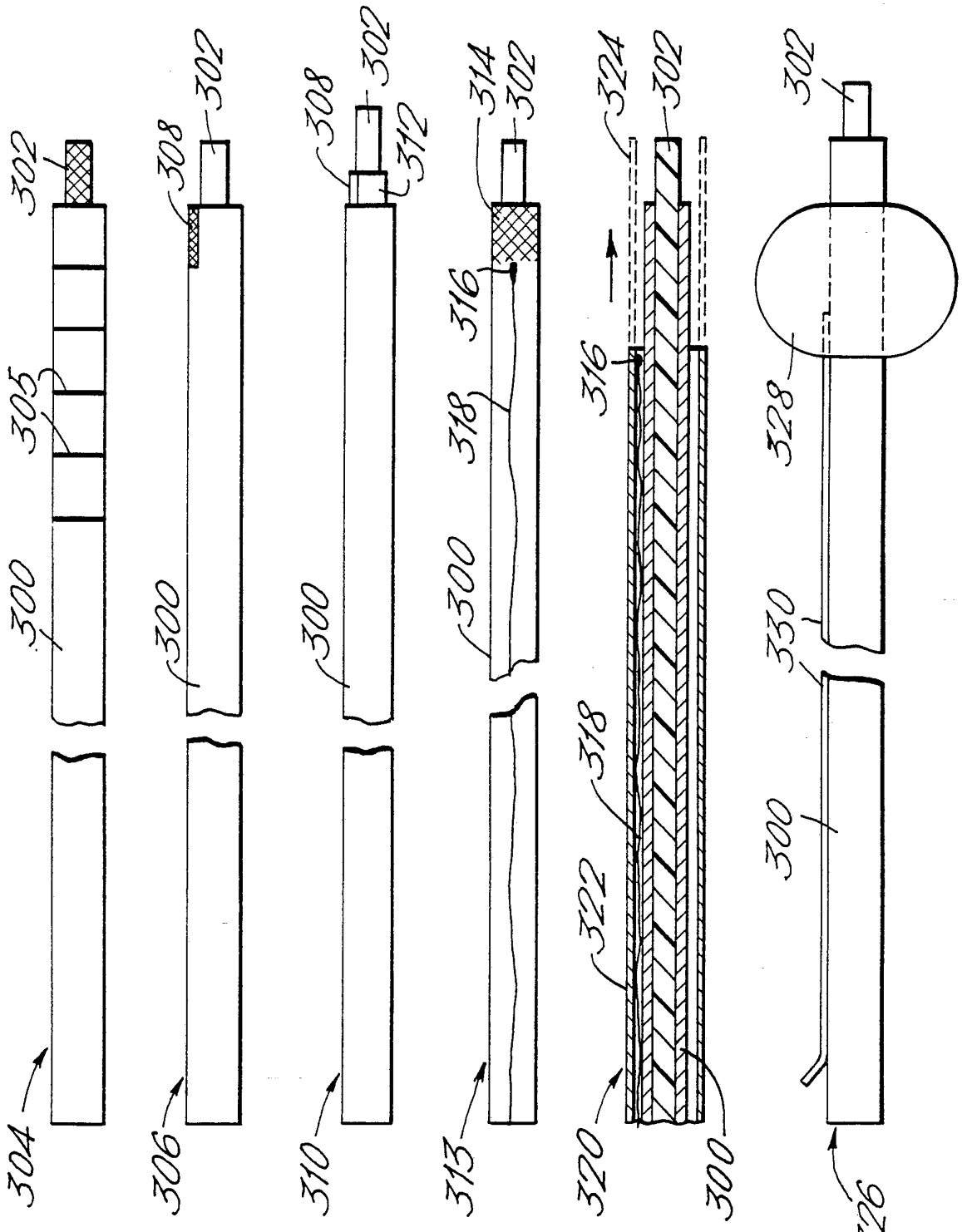

Fig.29. Fig.30. Fig.31. Fig.32. Fig.33. Fig.34.

Fig.35.

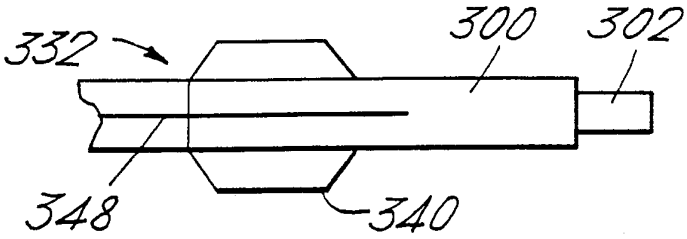

Fig.35a.

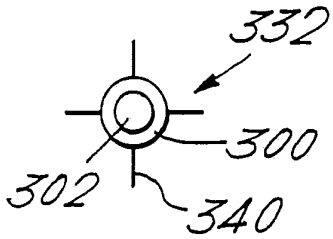

Fig.36.

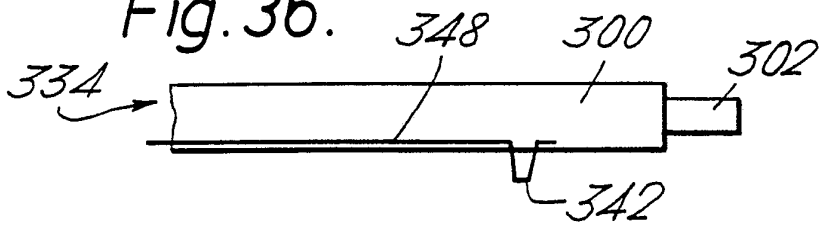

Fig.37.

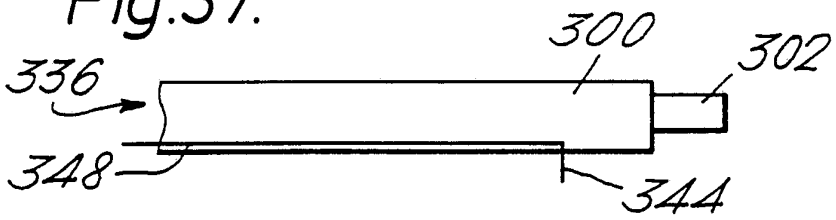

Fig.38.

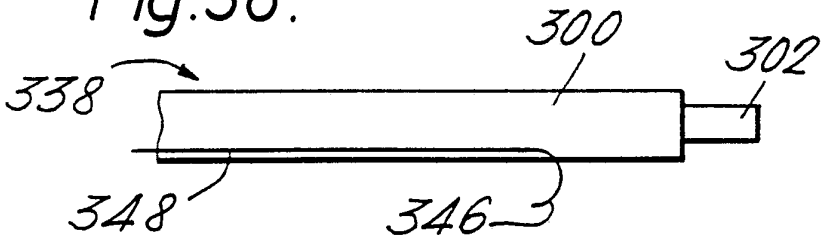

Fig.39.

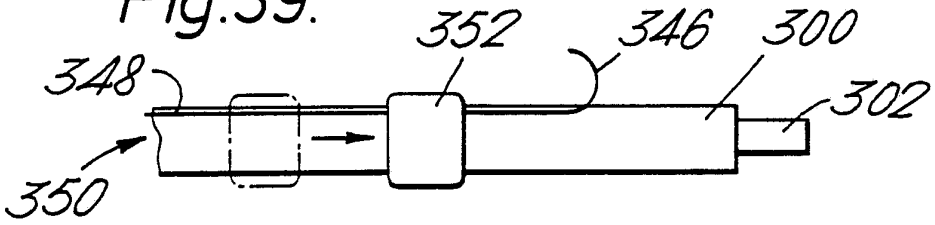

Fig.40a.

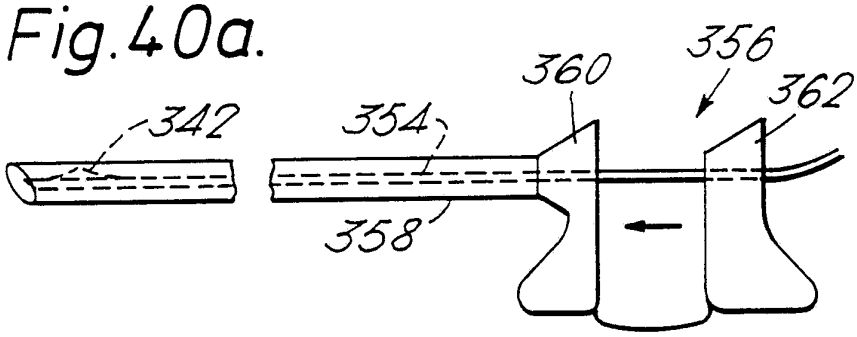

Fig.40b.

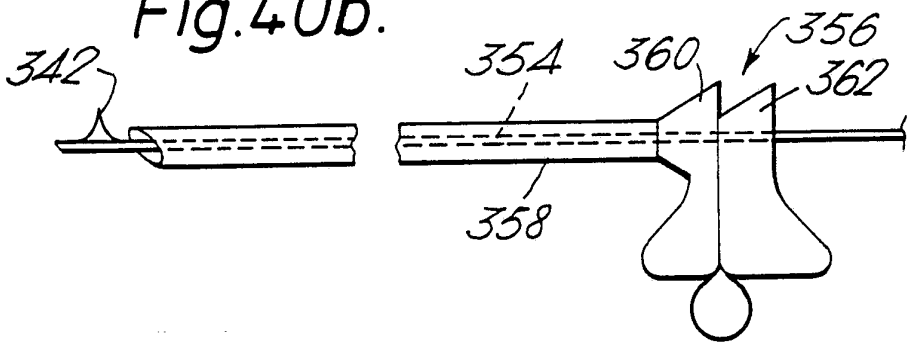

Fig.40c.

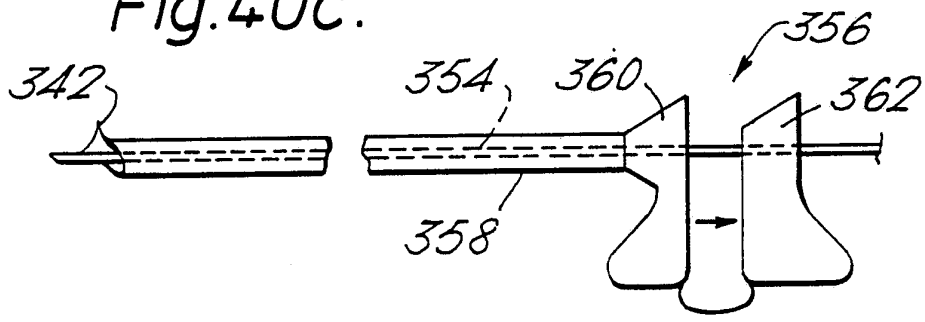

Fig.41a.

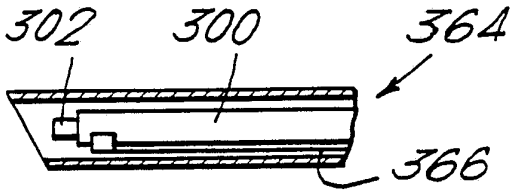

Fig.41b.

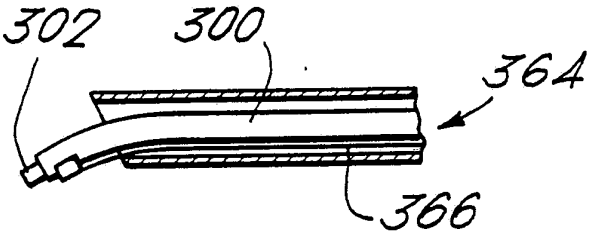

INTERNATIONAL SEARCH REPORT

International Application No PCT/GB 92/01552

I. CLASSIFICATION OF SUBJECT MATTER (if several classification symbols apply, indicate all)[6]

According to International Patent Classification (IPC) or to both National Classification and IPC

Int.Cl.5 A 61 M 25/10

II. FIELDS SEARCHED

Minimum Documentation Searched[7]

Classification System	Classification Symbols
Int.Cl.5	A 61 M

Documentation Searched other than Minimum Documentation to the Extent that such Documents are Included in the Fields Searched[8]

III. DOCUMENTS CONSIDERED TO BE RELEVANT[9]

Category °	Citation of Document, [11] with indication, where appropriate, of the relevant passages [12]	Relevant to Claim No.[13]
X	WO,A,9100118 (MEDICAL INNOVATION I UPPSALA AB) 10 January 1991, see the whole document	1-3
Y	---	4
Y	US,A,4490421 (LEVY) 25 December 1984, see the whole document	4

A	EP,A,0182689 (MEDICAL LASER RESEARCH AND DEVELOPMENT CORP.) 28 May 1986, see the whole document	1,2
	--- -/-	

° Special categories of cited documents : [10]

"A" document defining the general state of the art which is not considered to be of particular relevance

"E" earlier document but published on or after the international filing date

"L" document which may throw doubts on priority claim(s) or which is cited to establish the publication date of another citation or other special reason (as specified)

"O" document referring to an oral disclosure, use, exhibition or other means

"P" document published prior to the international filing date but later than the priority date claimed

"T" later document published after the international filing date or priority date and not in conflict with the application but cited to understand the principle or theory underlying the invention

"X" document of particular relevance; the claimed invention cannot be considered novel or cannot be considered to involve an inventive step

"Y" document of particular relevance; the claimed invention cannot be considered to involve an inventive step when the document is combined with one or more other such documents, such combination being obvious to a person skilled in the art.

"&" document member of the same patent family

IV. CERTIFICATION

Date of the Actual Completion of the International Search	Date of Mailing of this International Search Report
17-11-1992	15 DEC 1992
International Searching Authority	**Signature of Authorized Officer**
EUROPEAN PATENT OFFICE	L. VINGAND

III. DOCUMENTS CONSIDERED TO BE RELEVANT (CONTINUED FROM THE SECOND SHEET)

Category °	Citation of Document, with indication, where appropriate, of the relevant passages	Relevant to Claim No.
A	EP,A,0205851 (HUBMANN, MAX et al.) 30 December 1986, see the whole document	1,2

INTERNATIONAL SEARCH REPORT

International application No.
PCT/GB92/01552

Box I Observations where certain claims were found unsearchable (Continuation of item 1 of first sheet)

This international search report has not been established in respect of certain claims under Article 17(2)(a) for the following reasons:

1. [X] Claims Nos.: *
because they relate to subject matter not required to be searched by this Authority, namely:
* Claims 25-37,51,52,66,67,78-82
See PCT Rule 39.1(iv)
Methods for treatment of the human or animal body by surgery or therapy, as well as diagnostic methods

2. [ ] Claims Nos.:
because they relate to parts of the international application that do not comply with the prescribed requirements to such an extent that no meaningful international search can be carried out, specifically:

3. [X] Claims Nos.: Most dependent claims
~~because they are dependent claims and~~ are not drafted in accordance with the second and third sentences of Rule 6.4(a).
Most dependent claims, further, violate PCT Rule 6 in a number of ways that can not at this stage, be meaningfully specified.

Box II Observations where unity of invention is lacking (Continuation of item 2 of first sheet)

This International Searching Authority found multiple inventions in this international application, as follows:

Without a valid claim 1, the dependent claims refer to a great number of inventions, that can not, at this stage, be meaningfully specified.

1. [ ] As all required additional search fees were timely paid by the applicant, this international search report covers all searchable claims.

2. [X] As all searchable claims could be searches without effort justifying an additional fee, this Authority did not invite payment of any additional fee.

3. [ ] As only some of the required additional search fees were timely paid by the applicant, this international search report covers only those claims for which fees were paid, specifically claims Nos.:

4. [ ] No required additional search fees were timely paid by the applicant. Consequently, this international search report is restricted to the invention first mentioned in the claims; it is covered by claims Nos.:

Remark on Protest

[ ] The additional search fees were accompanied by the applicant's protest.

[ ] No protest accompanied the payment of additional search fees.

ANNEX TO THE INTERNATIONAL SEARCH REPORT ON INTERNATIONAL PATENT APPLICATION NO. GB 9201552 SA 63647

This annex lists the patent family members relating to the patent documents cited in the above-mentioned international search report.
The members are as contained in the European Patent Office EDP file on 02/12/92
The European Patent Office is in no way liable for these particulars which are merely given for the purpose of information.

Patent document cited in search report	Publication date	Patent family member(s)	Publication date
WO-A- 9100118	10-01-91	SE-C- 463960	20-06-91
		AU-A- 5844090	17-01-91
		SE-A- 8902307	27-12-90
US-A- 4490421	25-12-84	CA-A- 1257171	11-07-89
		EP-A,B 0135990	03-04-85
		EP-A- 0355937	28-02-90
		JP-C- 1482730	27-02-89
		JP-A- 60034452	22-02-85
		JP-B- 63026655	31-05-88
		JP-B- 2028341	22-06-90
		JP-A- 60185565	21-09-85
		JP-B- 3063908	03-10-91
		JP-A- 63192456	09-08-88
		US-E- RE33561	26-03-91
		US-E- RE32983	11-07-89
EP-A- 0182689	28-05-86	CA-A- 1266412	06-03-90
		DE-A- 3585024	06-02-92
		JP-A- 61113438	31-05-86
		US-A- 4799479	24-01-89
		US-A- 5019075	28-05-91
EP-A- 0205851	30-12-86	DE-A- 3516830	13-11-86