United States Patent [19]

Cecil et al.

[11] **3,731,181**

[45] **May 1, 1973**

[54] **IMPROVED REFERENCE CURRENT SOURCE**

[75] Inventors: **James B. Cecil**, Tempe; **William G. Howard, Jr.**, Mesa, both of Ariz.

[73] Assignee: **Motorola, Inc.**, Franklin Park, Ill.

[22] Filed: **Apr. 12, 1972**

[21] Appl. No.: **243,490**

Related U.S. Application Data

[63] Continuation of Ser. No. 110,936, Jan. 29, 1971, abandoned.

[52] **U.S. Cl.** **323/4**, 323/80, 330/69

[51] **Int. Cl.**.....**G05f 1/56**

[58] **Field of Search** .....307/297; 330/22, 330/30 D, 69; 323/1, 4, 16, 19, 80

[56] **References Cited**

UNITED STATES PATENTS

3,375,434	3/1968	Shapiro	323/4
3,569,844	3/1971	Lynn	330/30 D
3,383,612	5/1968	Harwood	330/22
3,457,493	7/1969	Shoemaker et al.	323/4
3,529,252	9/1970	Long	330/22 X

Primary Examiner—A. D. Pellinen

Attorney—Mueller & Aichele

[57] **ABSTRACT**

A digital to analog converter is supplied with operating current from a reference current source including an operational amplifier, across the input terminals of which are connected a reference voltage and a reference resistor in series. The output of the operational amplifier is fed back to the input by a reference transistor coupled between one of the input terminals and a source of potential. The current flowing through the reference transistor is established by the reference voltage and the reference resistor. The base of the reference transistor is coupled in common with the base of another transistor matched to it, so that the collector of such other transistor supplies the operating current to the digital to analog converter circuit.

9 Claims, 2 Drawing Figures

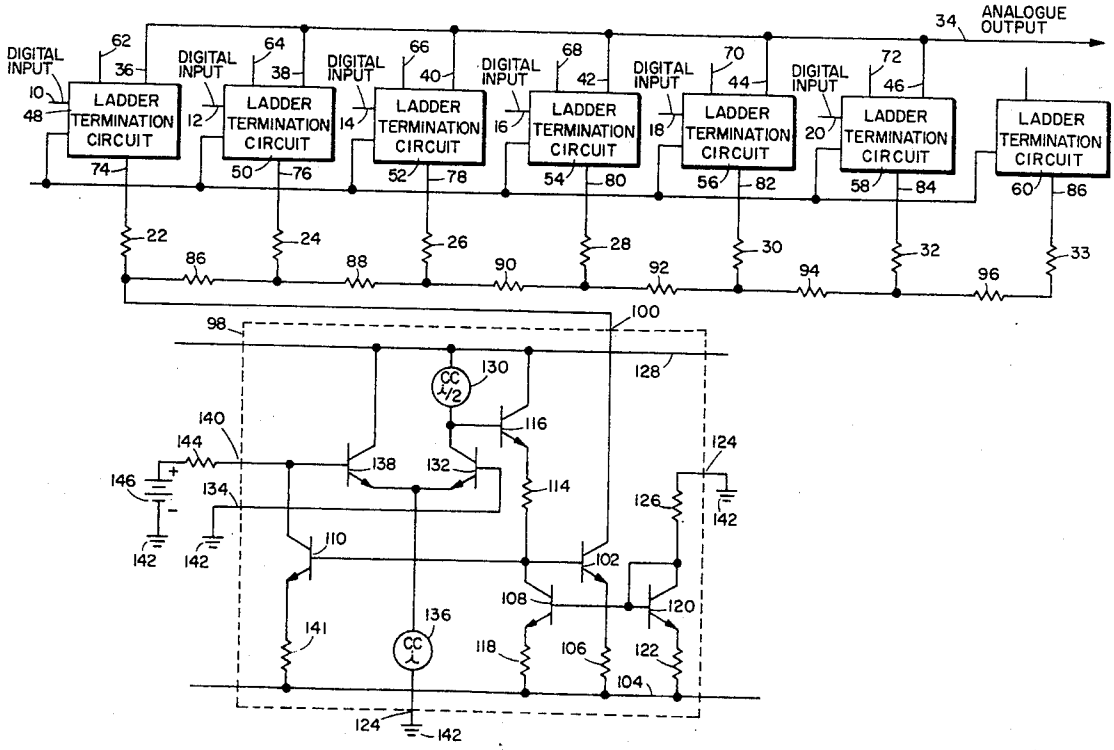

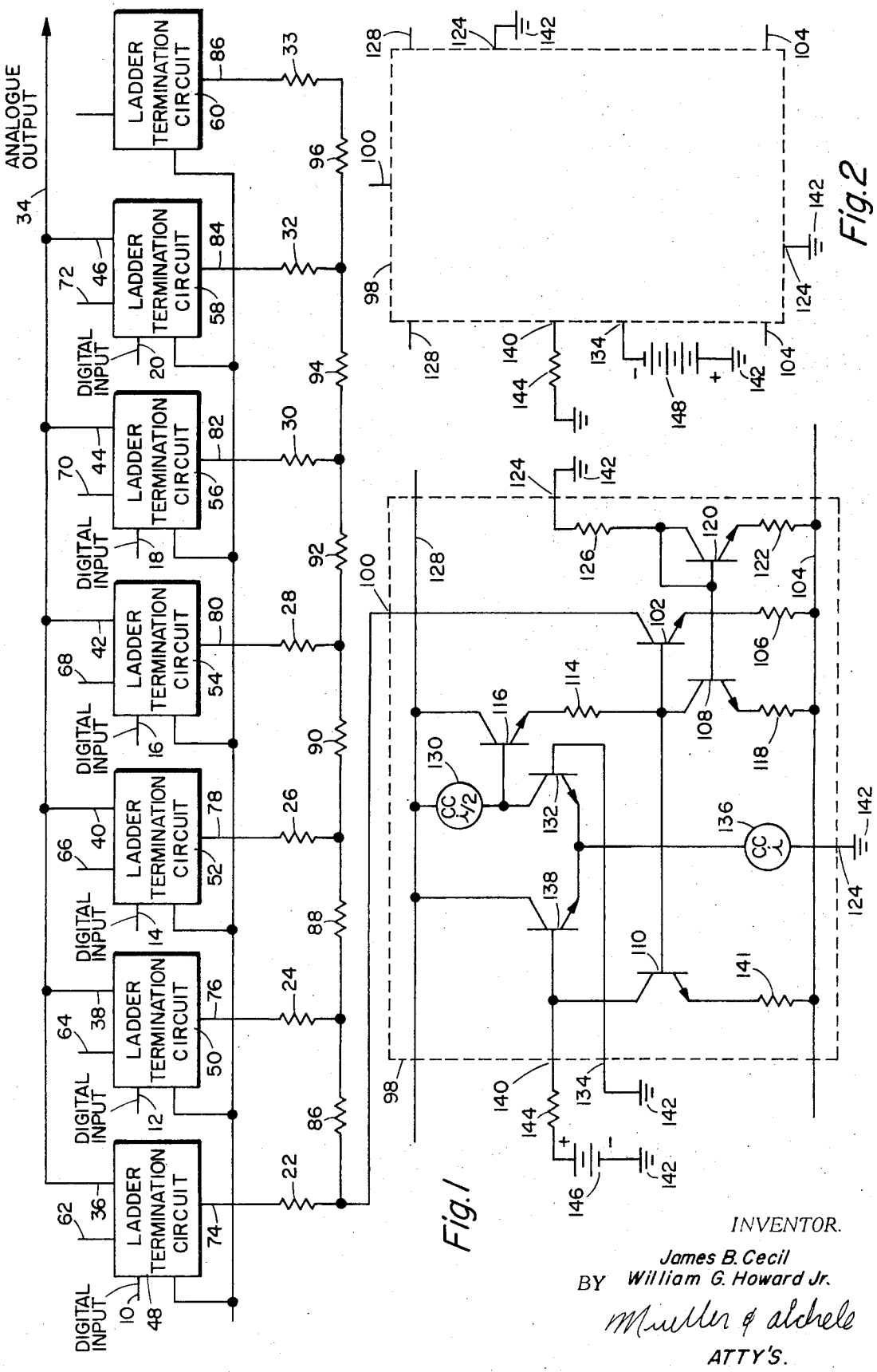

Fig. 1

Fig. 2

INVENTOR.
James B. Cecil
William G. Howard Jr.
BY Mueller & Aichele
ATTY'S.

IMPROVED REFERENCE CURRENT SOURCE

This is a continuation of application Ser. No. 110,936, filed Jan. 29, 1971 now abanded.

BACKGROUND

It is known how to convert a digital value, indicated by a group of digits to an analog amount of current. This can be done by using an R-2R resistance ladder. The current flowing from each resistance comprising a rung of the ladder to the analog output is binarily related to the current flow from the other rungs of the ladder, and one or more of the rungs supplies current (or no current) to the analog output as determined by the several digits. For proper operation of such a ladder, the current supplied by the supply means which provides current to the ladder and all its rungs, must be very constant and this constancy should be independent of the voltage of the current supply.

It is an object of this invention to provide an improved digital to analog converter.

It is another object of this invention to provide a digital to analog converter including an improved constant current source.

It is still another object of this invention to provide a constant current source whose constant current is determined by ordinarily available standard elements.

SUMMARY

In accordance with this invention, the constant current source for supplying the resistance ladder is adapted to be put on a chip. The chip has a positive and a negative control terminal. The positive control terminal may be connected to ground by way of a control resistor and a standard voltage source which is positive with respect to ground in which case the negative controlled terminal is grounded, or, the positive and the negative terminals may be connected to ground by way of a control resistor and a standard source which is negative with respect to ground, respectively. Means are included in the constant current source to cause the constant current to be determined by the value of the control resistor and the standard voltage. Means are also included in the constant current source to shift the level of voltage applied to the part thereof that determines the constant current by an amount determined by the value of and variation, if any, of the voltage supply for the constant current source.

DESCRIPTION

The invention will be better understood upon reading the following description in connection with the accompanying drawing in which

FIG. 1 illustrates a digital to analog conversion circuit including a constant current source in accordance with this invention, and

FIG. 2 is a fragmentary illustration of another connection of the constant current source of this invention, also in accordance with this invention.

Turning first to FIG. 1, the digits of a binary number are applied to the input terminals 10, 12, 14, 16 18 and 20 respectively of ladder termination circuits 48, 50, 52, 54, 56 and 58, the most significant digit being applied to the terminal 10 and the least significant to the terminal 20. The current provided by the several rungs 22, 24, 26, 28, 30 and 32 of the ladder are supplied to

the analog output terminal 34 by way of the respective output connections 36, 38, 40, 42, 44 and 46 of the ladder termination circuits 48, 50, 52, 54, 56, and 58, or is connected to a power supply (not shown) by way of respective terminals 62, 64, 66, 68, 70 or 72, depending on whether the digit applied to the terminals 10 to 20 are ones or zeros.

While the ladder itself is well known, for completeness, it will be described here. One terminal of each of the resistors 22, 24, 26, 28, 30, 32 and 33 is connected to a respective ladder terminal 74, 76, 78, 80, 82, 84 and 86 of a ladder termination circuit 48 to 60 respectively. The other terminals of the resistors 22 and 24 are connected together by way of a resistor 86. The other terminals of the resistors 24 and 26 are connected by way of a resistor 88. The other terminals of the resistors 26 and 28 are connected by way of a resistor 90. The other terminals of the resistors 28 and 30 are connected by way of resistor 92. The other terminals of the resistors 30 and 32 are connected by way of a resistor 94 and the other terminals of the resistors 32 and 33 are connected by way of a resistor 96. Since the resistors 22, 24, 26, 28 30 and 32 are each equal to 2R and since the resistors 86, 88, 90, 92, 94, 96 and 33 are equal to R, the current flow from or to the constant current source 98 at the terminals 74, 76, 78, 80, 82, 84 and 86 respectively 32I, 16I, 8I, 4I, 2I, I and I, the total current flow of the constant current source 98 being 64I. It will be noted that the ladder termination circuit 60 differs from the ladder termination circuits 48 to 58 in that there is no digital input to the circuit 60 and in that the output of the circuit 60 is not connected to the analog output terminal 34, whereby, the maximum current flow into the analog output 34 is 63I when the digital number is 000000, and is zero when the digital number is 111111, and is an intermediate value when the digital number has an intermediate value, using positive type logic. The output terminal 100 of the constant current source 98 is connected to the junction of the resistors 22 and 86. Since the accuracy of the digital to analog conversion depends on the constancy of the current of the constant current source 98, the constant current source 98 must be of high quality. The analog to digital converter may be put on a chip in which case the absolute values of the resistors 22 to 33 and 86 to 96 is hard to control, however their ratios may be easily made the required ones as noted above. Therefore, a constant voltage source cannot be used instead of the constant current source 98 since using a constant voltage source the amount of current at the analog output terminal 34 will depend not only on the digital number applied to the converter but also on the absolute values (as distinct from the relative values) of the ladder resistors 22 to 33 and 86 to 96. Using a constant current source, the analog output at 34 is not dependent on the absolute values of the resistors 22 to 33 and 86 to 96 but on their relative values. Also, it is advantageous, for known reasons, to put the constant current source 98 on a chip, the boundaries of the chip being indicated by the reference character 98 which is used in a dual capacity also to indicate the constant current source. However, if desired, the complete digital to analog converter may be put on the same chip.

The constant current source 98 comprises an NPN transistor 102 whose collector is connected to the terminal 100 of the chip 98. Since all transistors to be mentioned are of the NPN type, no further description of the type thereof appears necessary. The emitter of the transistor 102 is connected to a negative potential bus 104 by way of a resistor 106. The base of the transistor 102 is connnected to the collector of a transistor 108, to the base of a transistor 110 and, by way of a resistor 114 to the emitter of a transistor 116. The emitter of the transistor 108 is connected to the bus 104 by way of a resistor 118. The base of the transistor 108 is connected to the base and to the collector of a transistor 120. The emitter of the transistor 120 is connected to the bus 104 by way of a resistor 122. The shorted base to collector of the transistor 120 is connected to a ground terminal 124 of the chip 98 by way of a resistor 126. The transistor 120, therefore, acts as a diode whose anode is the shorted base and collector and whose cathode is the emitter thereof.

The collector of the transistor 116 is connected to a positive bus 128. The base of the transistor 116 is is connected by way of a constant current source 130 to the bus 128 and directly to the collector of a transistor 132. The base of the transistor 132 is connected to a control terminal 134 for the chip 98. The emitter of the transistor 132 is connected to ground terminal 124 by way of a constant current source 136. The emitter of the transistor 132 is connected directly to the emitter of a transistor 138 whose collector is connected directly to the bus 128. Thus, the transistors 132 and 138 form an operational amplifier. Feedback from the output of this operational amplifier to the input on the base of the transistor 138 is accomplished by connecting the collector of the transistor 110 to the base of the transistor 138 at a control terminal 140 for the chip 98. The emitter of the transistor 110 is connected by way of a resistor 141 to the negative bus line 104.

As shown in FIG. 1, a ground terminal 124 may be connected to a reference potential such as ground 142 and the control terminal 134 is also connected to ground 142. The control terminal 140 is connected by way of a standard resistor 144 and the positive to negative terminal of a standard voltage source 146 to ground 142. As shown in FIG. 2, in which the details of the chip 98 are not shown but the terminals thereof are shown and are given the same reference characters as the corresponding parts of FIG. 1, the control terminal 140 may be connected to ground by way of the standard resistor 144 but the voltage source 146 is omitted from FIG. 2 and a standard voltage source 148 which is negative with respect to ground is connected between the control terminal 134 and ground 142. That is, the circuit of FIG. 1 is versatile in that it can be used as shown in FIG. 1 with the standard source 146 which is positive with respect to ground or as shown in FIG. 2 with the standard source 148 which is negative with respect to ground, the standard resistor 144 being used with either source 146 or 148.

Although the voltage applied between the positive bus 128 and the negative bus 104 may vary, the constant current source 98 will draw constant current from the terminal 100 under control of the standard resistor 144 and one or the other of the standard voltage sources 146 and 148. The operation of the constant current source 98 is as follows:

The operation of the constant current means of the chip 98 is explained first with respect to FIG. 1. Due to the fact that the constant current source 130 provides one-half the current provided by the constant current source 136, the current flow through the transistors 138 and 132 is the same. Therefore, the voltage at the bases of the transistors 132 and 138 is the same. This operation is due to the negative feedback provided from the emitter of the transistor 138 to the emitter of the transistor 132, to the base of the transistor 116, through the resistor 114 and back to the base of the transistor 110. Therefore, since the base of the transistor 132 is at ground potential, the current flowing through the standard resistor 144 due to the standard voltage source 146 is such that the terminal 140 is also at ground. Therefore, the current flowing through the transistor 110 and the emitter resistor 141 is equal to the amount of current fixed by the requirement that the point 140 is at zero potential, whereby this current is constant and does not depend on the voltage applied to the buses 104 and 128. Since the base of the transistor 110 is connected directly to the base of the transistor 102, the current flowing through the resistor 106 is equal to the current flowing through the resistor 141 (transistors 110 and 102 being made as nearly equal as possible while resistors 141 and 106 are also as nearly equal as possible) which as stated is constant, whereby the chip 98 draws constant current from the connection 100 that depends on the values of the standard voltage source such as 146 and the standard resistors such as the resistor 144 and not on the voltages supplied to the buses 104 or 128.

In FIG. 2, the terminal 134 is at the voltage of the source 148 with respect to ground, whereby the current flowing in the resistor 144 is such as to make the terminal 140 at the same voltage as the terminal 134. Again, this current which is constant since the voltage source 148 and the resistor 144 are standard, flows through the resistor 141 (not shown in FIG. 2), whereby the chip 98 operates the same whether the resistor 144 and the sources 146 or 148 are connected as shown in FIG. 1 or as shown in FIG. 2.

Due to the fact that the positive voltage on the bus 128 and the negative voltage on the bus 104 may vary from installation to installation and furthermore due to the fact that these voltages may vary from time to time at any installation, a variable voltage level shift circuit is provided on the chip 98. The function of the voltage level shift circuit is primarily to make sure that the several transistors on the chip 98 have the proper voltages applied thereto so that they will continue to act in the active mode. That is, for NPN transistors to operate in the active mode, the base must be negative with respect to the collector and the base must be positive with respect to the emitter at all times. The voltage level shift circuit comprises the resistor 122, the diode 120, the resistor 126 across which negative voltage supply current with respect to ground is applied, and also includes the transistor 108 and the resistors 114 and 118. The voltage drop across the resistor 122 depends on the negative voltage supply that is connected to the bus 104. The connection of the base of the diode connected transistor 120 to the base of the transistor 108 forces the voltage across the resistor 118 to be the same as the voltage across the resistor 122 (the transistors 108 and 120 being as nearly equal as possi-

ble and the resistors **118** and **122** being as nearly equal as possible), fixing the current flowing through the resistor **114** and therefore the voltage drop thereacross. This resistor **114** acts to shift the level of the voltage on the bases of the transistors **110** and **102** down from the voltage of the emitter of transistor **116** since the resistor **114** is connected between the emitter of the transistor **116** and the base of the transistors **102** and **110**. Therefore, if the voltage on the bus **104** varies, the voltages on the several elements of the transistors **102** and **110** are also such that the transistors **102**, **110** and **132** continue to operate in the active mode.

It is noted that some of the current from the constant current source **130** flows into the base of the transistor **116**, whereby the current in the transistor **132** is not exactly half the current in the constant current source **136**. This error can be made very small by making the base current of the transistor **116** small as by using a very high Beta transistor **116**, or as by using another transistor with the transistor **116**, the collectors of the other transistor and the transistor **116** being connected together, the emitter of the other transistor being connected to the base of the transistor **116**, and the base of the other transistor being connected to the collector of the transistor **132**, or in short, the transistor **116** and the other transistor (not shown) may be connected in the known connection known as a "Darlington" pair.

While only NPN transistors are described, PNP transistors may be used with proper connection and upon proper voltage supply therefor.

What is claimed is:

1. A constant current source which is independent of the power supply therefor comprising:

an operational amplifier having first and second inputs and an output;

a standard voltage source and a standard resistor coupled with the inputs of said operational amplifier;

a first transistor of a predetermined conductivity type having first and second main electrodes and a control electrode;

means for connecting the first main electrode of said first transistor to a load;

means for connecting the second main electrode of said first transistor to a first supply terminal;

a second transistor of said same predetermined conductivity type having first and second main electrodes and a control electrode;

means coupling the first main electrode of said second transistor with the first input of said operational amplifier;

and means for coupling the second main electrode of said second transistor to said first supply terminal; and

means for coupling the output of said operational amplifier in common with the control electrodes of said first and second transistors.

2. The current source of claim **1** in which a voltage level shift means is provided for shifting the voltage level applied to the control electrodes of said first and second transistors by a predetermined amount.

3. The current source of claim **2** in which said predetermined amount is determined by the voltage level of said supply terminal with respect to a point of reference potential.

4. The current source of claim **2** in which said voltage level shift means includes third and fourth transistors each having first and second main electrodes and a control electrode, a connection from a point of reference potential to the first main electrode of said third transistor, a connection from the second main electrode of said third transistor to said first supply terminal, a connection from the control electrode and from the first main electrode of said third transistor to the control electrode of said fourth transistor, a second supply terminal, a fifth transistor, a connection through the main electrodes of said fifth transistor from said second supply terminal and also through a level shift resistor and through the main electrodes of said fourth transistor to said first supply terminal and a connection from a main electrode of said fourth transistor to the control electrodes of said first and second transistors.

5. The constant current source according to claim **1** wherein said operational amplifier includes third and fourth transistors, each having a pair of main electrodes and a control electrode, with the control electrode of said third transistor comprising the first input of said operational amplifier and the control electrode of said fourth transistor comprising the second input of said operational amplifier, with one of the main electrodes of said fourth transistor comprising the output of said operational amplifier, and further including first means for coupling said one of the main electrodes of said fourth transistor and a corresponding main electrode of said third transistor with a second supply terminal, and second means for coupling the other of the main electrodes of said third and fourth transistors with a point of reference potential.

6. A constant current source according to claim **5** wherein said first means includes a first constant current source coupling said one main electrode of said fourth transistor with said second supply terminal and said second means comprises a second constant current source, with said second constant current source providing twice the current of said first constant current source.

7. The current source of claim **5** in which a voltage level shift means is provided for shifting the voltage level applied to the control electrodes of said first and second transistors by an amount determined by the voltage level of one of said supply terminals with respect to said point of reference potential.

8. The current source of claim **7** in which said voltage level shift means includes fifth and sixth transistors each having a pair of main electrodes and a control electrode, a connection from said point of reference potential to a first main electrode of said fifth transistor, a connection from the other main electrode of said fifth transistor to said first supply terminal, a connection from the control electrode and from the first main electrode of said fifth transistor to the control electrode of said sixth transistor, a seventh transistor, a connection through the main electrodes of said seventh transistor from said second supply terminal and also through a level shift resistor and through the main electrodes of said sixth transistor to said first supply terminal and a connection from the main electrode of said sixth transistor to the control electrode of said first transistor.

9. The current source of claim 1 wherein said first and second transistors are equal and said means for coupling the second main electrodes of said first and second transistors to said first supply terminal comprise first and second equal resistors, respectively.

* * * * *