US011483200B2

(12) **United States Patent**
Söderlind et al.

(10) **Patent No.: US 11,483,200 B2**
(45) **Date of Patent: *Oct. 25, 2022**

(54) **METHODS AND SYSTEMS FOR PROVISIONING SETTINGS OF A MEDIA PLAYBACK DEVICE**

(71) Applicant: **Spotify AB**, Stockholm (SE)

(72) Inventors: **Nicklas Söderlind**, Stockholm (SE); **Jimmy Wahlberg**, Uppsala (SE)

(73) Assignee: **Spotify AB**, Stockholm (SE)

(*) Notice: Subject to any disclaimer, the term of this patent is extended or adjusted under 35 U.S.C. 154(b) by 0 days.

This patent is subject to a terminal disclaimer.

(21) Appl. No.: **16/397,378**

(22) Filed: **Apr. 29, 2019**

(65) **Prior Publication Data**

US 2019/0327139 A1 Oct. 24, 2019

Related U.S. Application Data

(63) Continuation of application No. 15/958,154, filed on Apr. 20, 2018, now Pat. No. 10,367,687.

(51) **Int. Cl.**

G06F 15/177	(2006.01)
H04L 41/0806	(2022.01)
H04L 41/08	(2022.01)
H04L 67/306	(2022.01)
G06Q 10/08	(2012.01)
H04L 65/1063	(2022.01)
G06Q 30/06	(2012.01)

(Continued)

(52) **U.S. Cl.**

CPC ***H04L 41/0809*** (2013.01); ***G06Q 10/083*** (2013.01); ***G06Q 30/0633*** (2013.01); ***H04L 41/0886*** (2013.01); ***H04L 65/1059*** (2013.01); ***H04L 65/1063*** (2013.01); ***H04L 65/612*** (2022.05); ***H04L 67/306*** (2013.01)

(58) **Field of Classification Search**

CPC H04L 41/0809; H04L 41/0886; H04L 67/306; H04L 65/1059

USPC 709/222

See application file for complete search history.

(56) **References Cited**

U.S. PATENT DOCUMENTS

5,583,873 A * 12/1996 Miyake H04H 20/28 370/527

2002/0046084 A1 4/2002 Steele et al.

(Continued)

FOREIGN PATENT DOCUMENTS

EP 1137210 A2 9/2001

WO WO-2010087748 A1 * 8/2010 ..... H04L 12/2809

OTHER PUBLICATIONS

"JVC Smart Music Control," JVC (Jan. 13, 2014). Available at: http://www.jvc.net/car/app/jsmc/.

Primary Examiner — Hee Soo Kim

(74) *Attorney, Agent, or Firm* — Merchant & Gould P.C.

(57) **ABSTRACT**

A system is provided for streaming media content in a vehicle. The system includes a personal media streaming appliance system configured to connect to a media delivery system and receive media content from the media delivery system at least via a cellular network. The media delivery system is configured to link a user media streaming account with a particular personal media streaming appliance to provide personalized media content to the appliance. Media contexts are assigned to multiple preset settings automatically so that the personal media streaming appliance system is configured to output personalized media content upon first use.

24 Claims, 16 Drawing Sheets

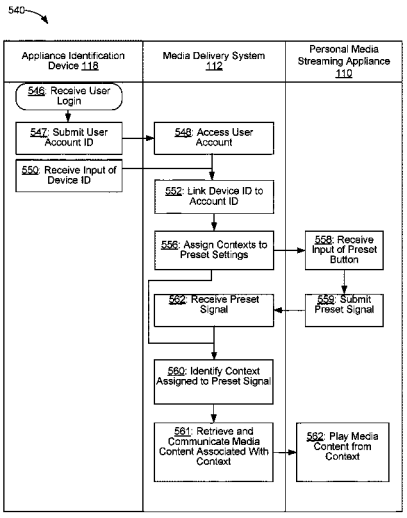

(51) **Int. Cl.**
H04L 65/1059 (2022.01)
H04L 65/612 (2022.01)

(56) **References Cited**

U.S. PATENT DOCUMENTS

2005/0086328	A1*	4/2005	Landram	H04L 67/34 709/228
2009/0164473	A1	6/2009	Bauer	
2010/0077094	A1	3/2010	Howarter et al.	
2010/0312369	A1	12/2010	Dollar, Jr.	
2010/0315200	A1	12/2010	Warrier	
2011/0138280	A1*	6/2011	Nagara	G11B 27/034 715/716
2012/0324046	A1	12/2012	Park	
2014/0006483	A1*	1/2014	Garmark	H04L 65/1093 709/203
2014/0258481	A1*	9/2014	Lundell	H04L 67/306 709/222
2016/0197967	A1	7/2016	Kreifeldt et al.	
2016/0330567	A1*	11/2016	Raleigh	H04L 63/0853
2018/0173489	A1*	6/2018	Gomes-Casseres	H04N 21/485

* cited by examiner

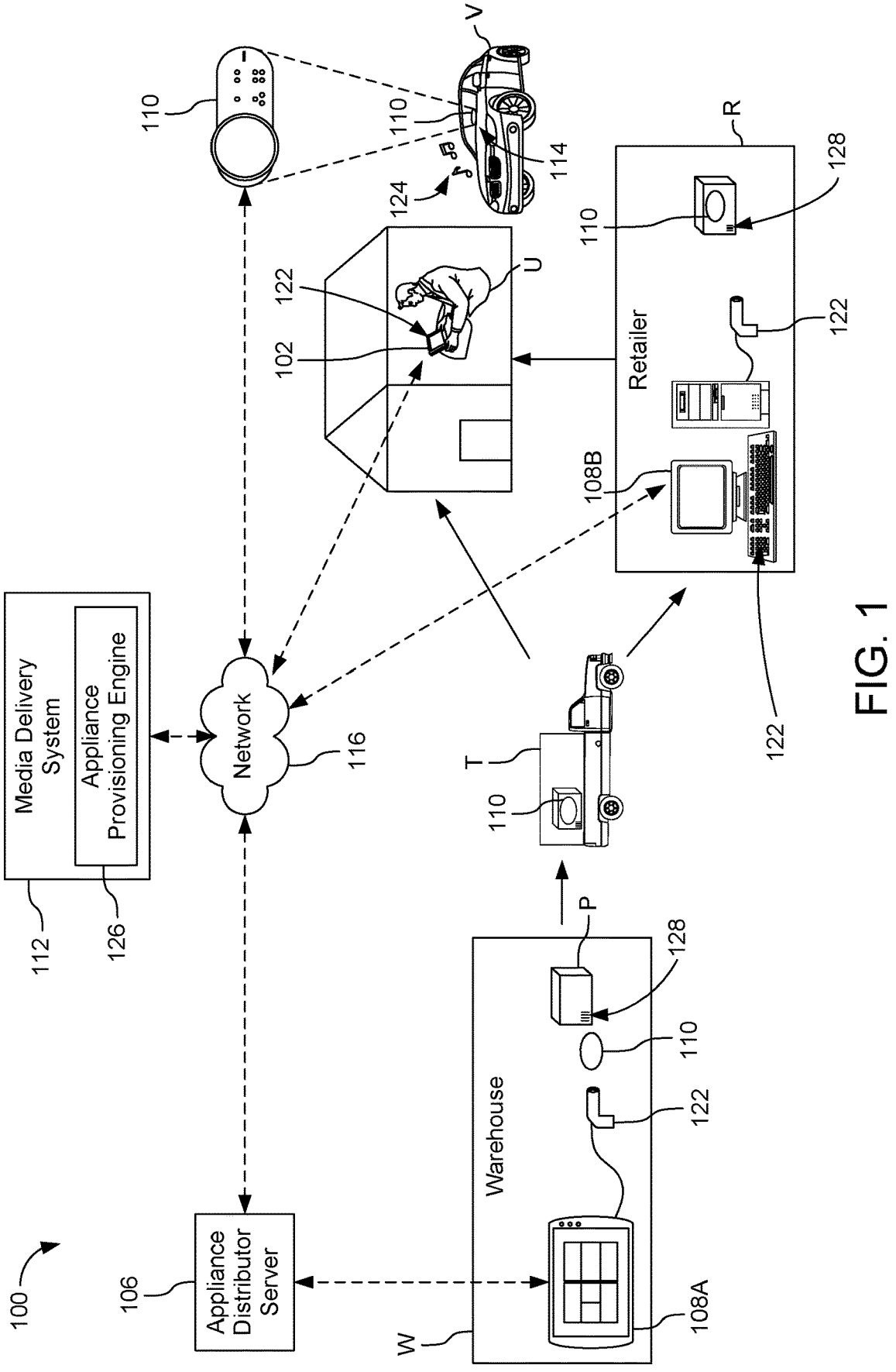
100
106
Appliance Distributor Server
W
Warehouse
108A
128
110
122
P
110
T
122
Retailer
R
108B
110
128
122
Network
116
Media Delivery System
Appliance Provisioning Engine
112
126
102
122
U
124
110
V
114
110

FIG. 1

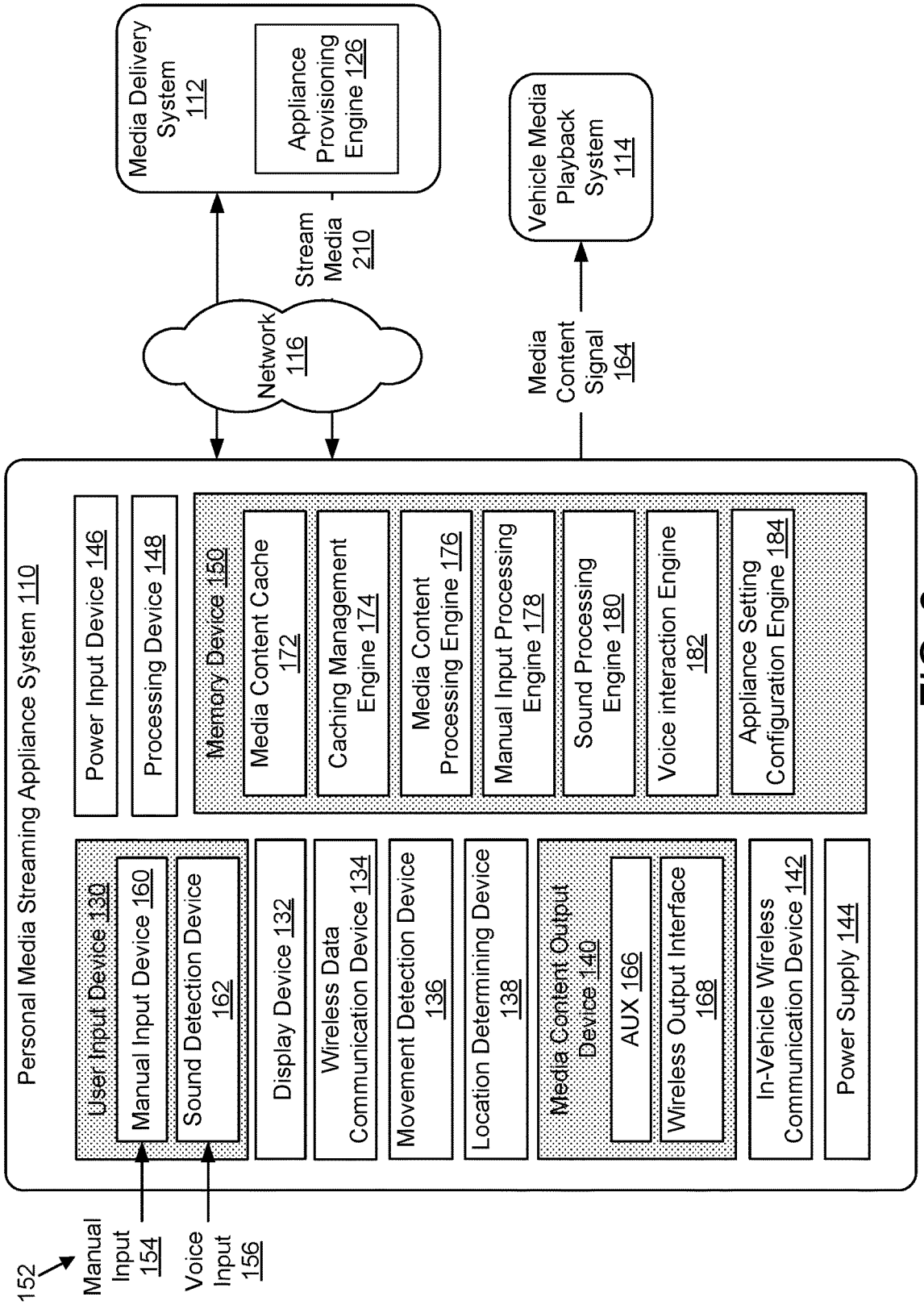
Media Delivery System 112
Appliance Provisioning Engine 126
Stream Media 210
Network 116
Vehicle Media Playback System 114
Media Content Signal 164
Personal Media Streaming Appliance System 110
Power Input Device 146
Processing Device 148
Memory Device 150
Media Content Cache 172
Caching Management Engine 174
Media Content Processing Engine 176
Manual Input Processing Engine 178
Sound Processing Engine 180
Voice interaction Engine 182
Appliance Setting Configuration Engine 184
User Input Device 130
Manual Input Device 160
Sound Detection Device 162
Display Device 132
Wireless Data Communication Device 134
Movement Detection Device 136
Location Determining Device 138
Media Content Output Device 140
AUX 166
Wireless Output Interface 168
In-Vehicle Wireless Communication Device 142
Power Supply 144
152
Manual Input 154
Voice Input 156

FIG. 2

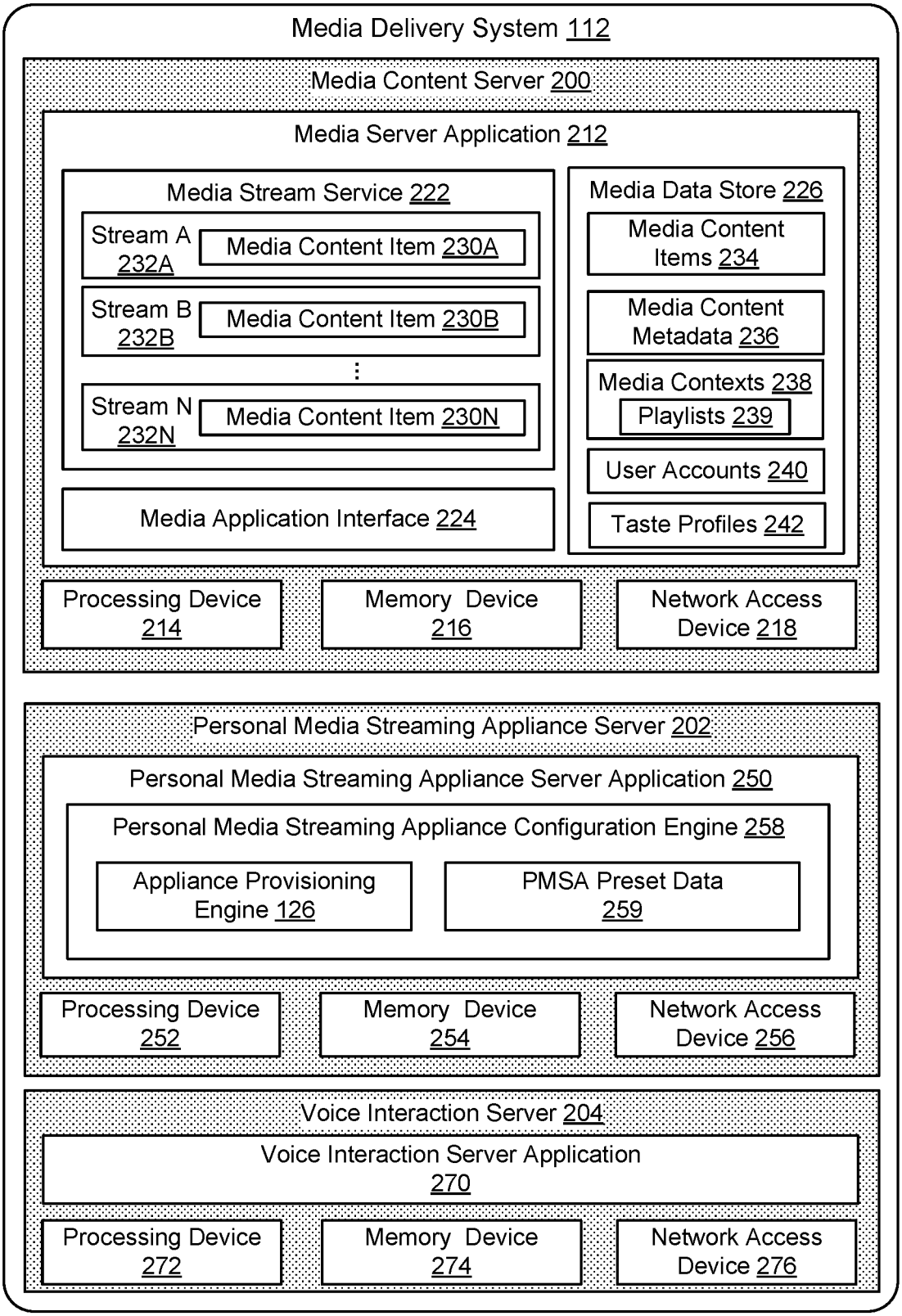
Media Delivery System 112
Media Content Server 200
Media Server Application 212
Media Stream Service 222
Stream A 232A
Media Content Item 230A
Stream B 232B
Media Content Item 230B
Stream N 232N
Media Content Item 230N
Media Application Interface 224
Media Data Store 226
Media Content Items 234
Media Content Metadata 236
Media Contexts 238
Playlists 239
User Accounts 240
Taste Profiles 242
Processing Device 214
Memory Device 216
Network Access Device 218
Personal Media Streaming Appliance Server 202
Personal Media Streaming Appliance Server Application 250
Personal Media Streaming Appliance Configuration Engine 258
Appliance Provisioning Engine 126
PMSA Preset Data 259
Processing Device 252
Memory Device 254
Network Access Device 256
Voice Interaction Server 204
Voice Interaction Server Application 270
Processing Device 272
Memory Device 274
Network Access Device 276

FIG. 3

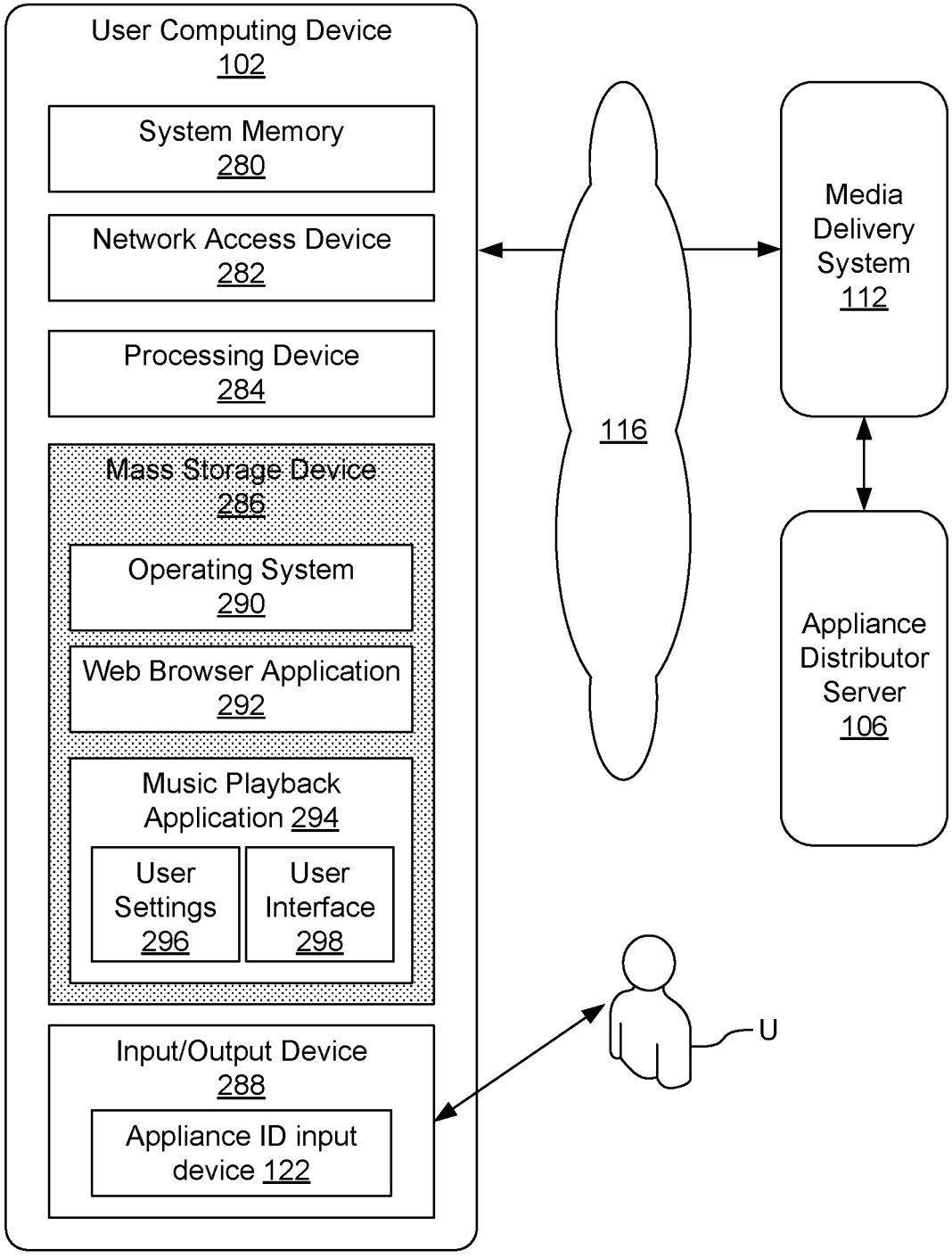
User Computing Device
102
System Memory
280
Network Access Device
282
Processing Device
284
Mass Storage Device
286
Operating System
290
Web Browser Application
292
Music Playback
Application 294
User
Settings
296
User
Interface
298
Input/Output Device
288
Appliance ID input
device 122
116
Media
Delivery
System
112
Appliance
Distributor
Server
106
U

FIG. 4

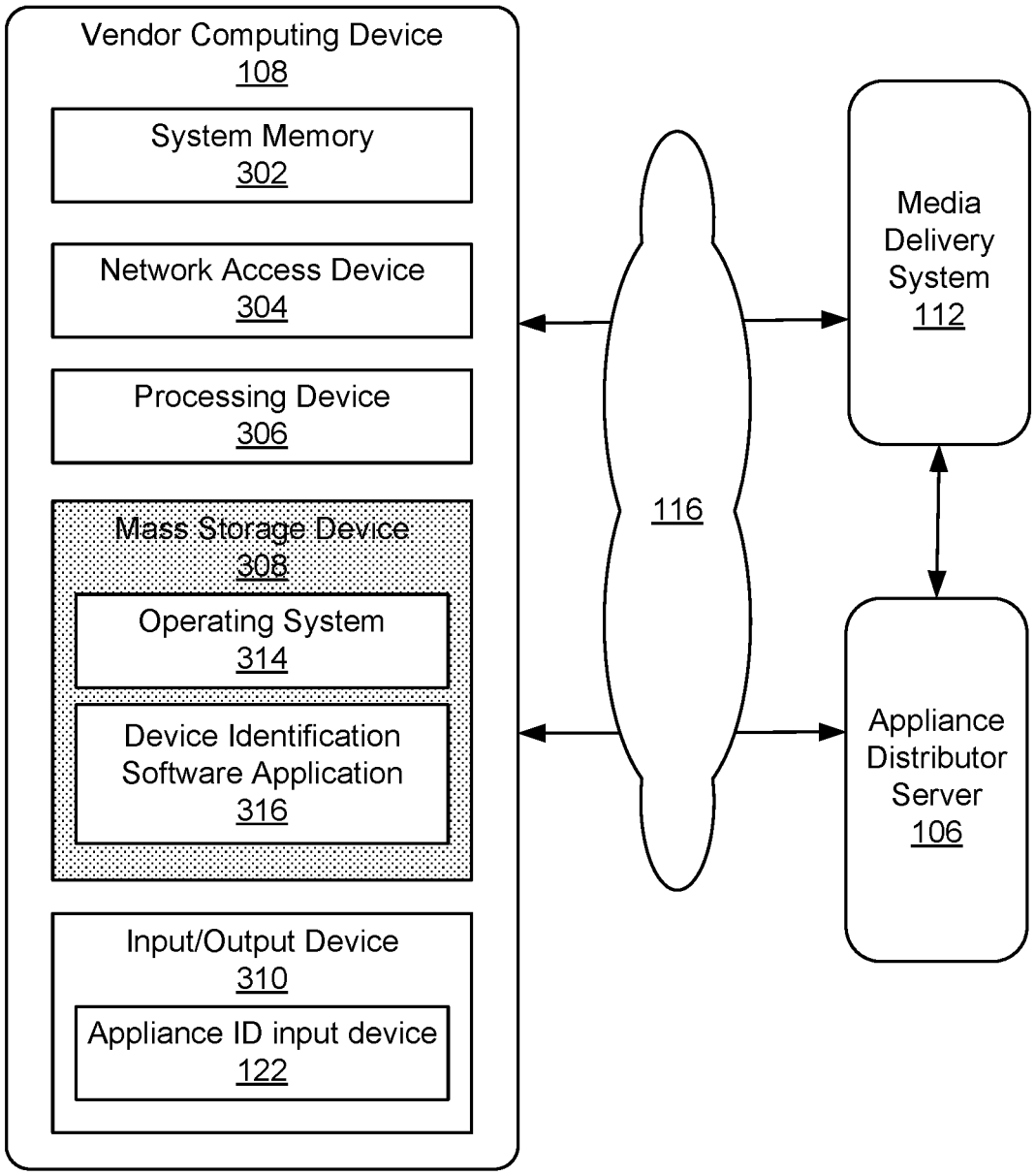
Vendor Computing Device
108
System Memory
302
Network Access Device
304
Processing Device
306
Mass Storage Device
308
Operating System
314
Device Identification
Software Application
316
Input/Output Device
310
Appliance ID input device
122
116
Media
Delivery
System
112
Appliance
Distributor
Server
106

FIG. 5

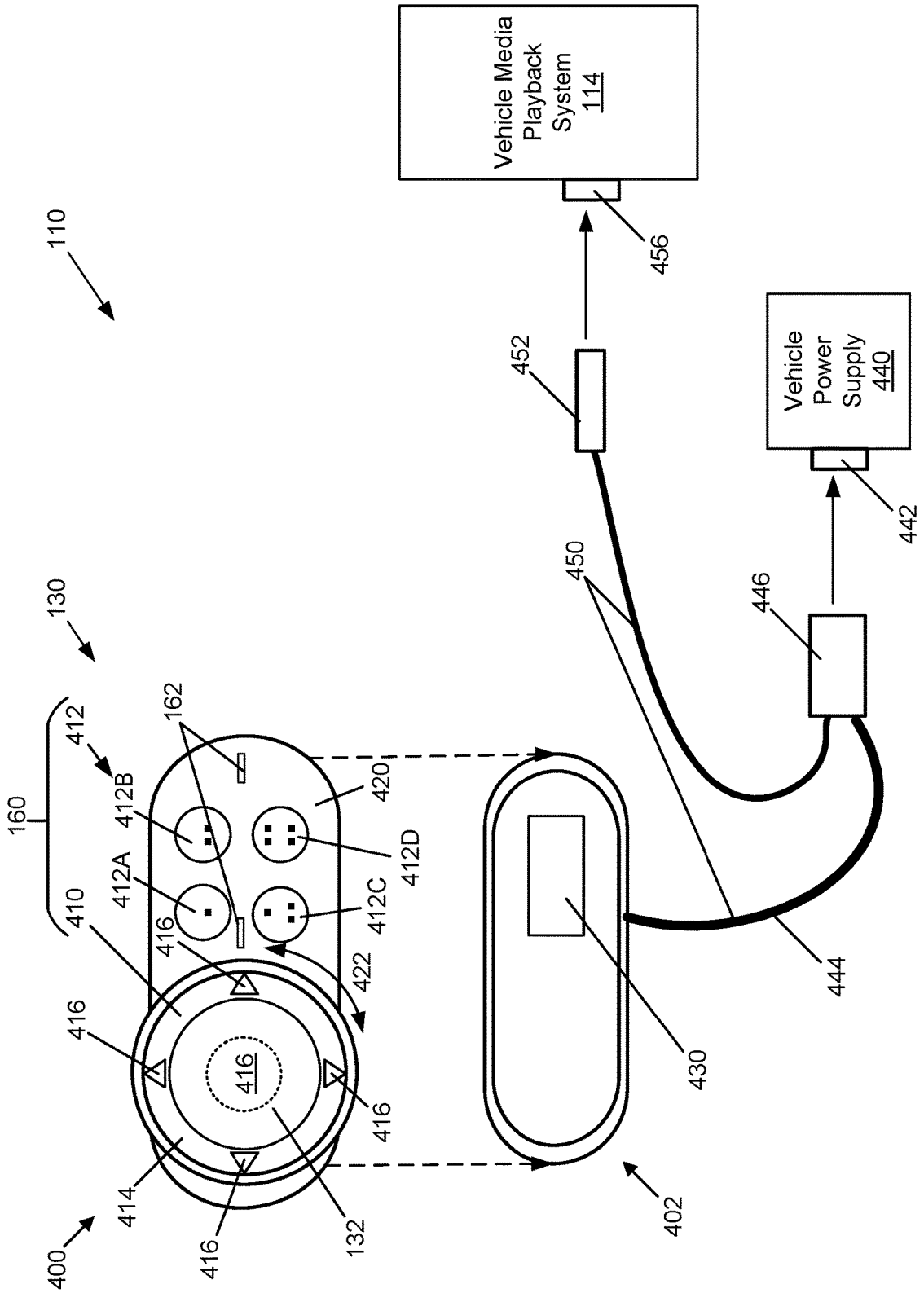
Vehicle Media Playback System 114
456
452
Vehicle Power Supply 440
442
450
446
444
110
130
160
412
162
412B
420
412D
412A
410
412C
416
422
416
416
416
414
416
132
400
430
402

FIG. 6

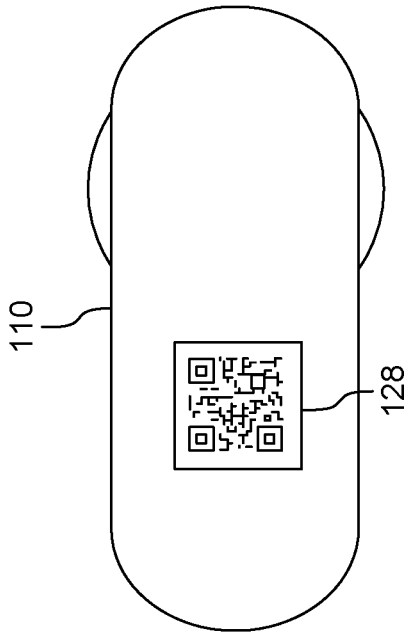

FIG. 7B

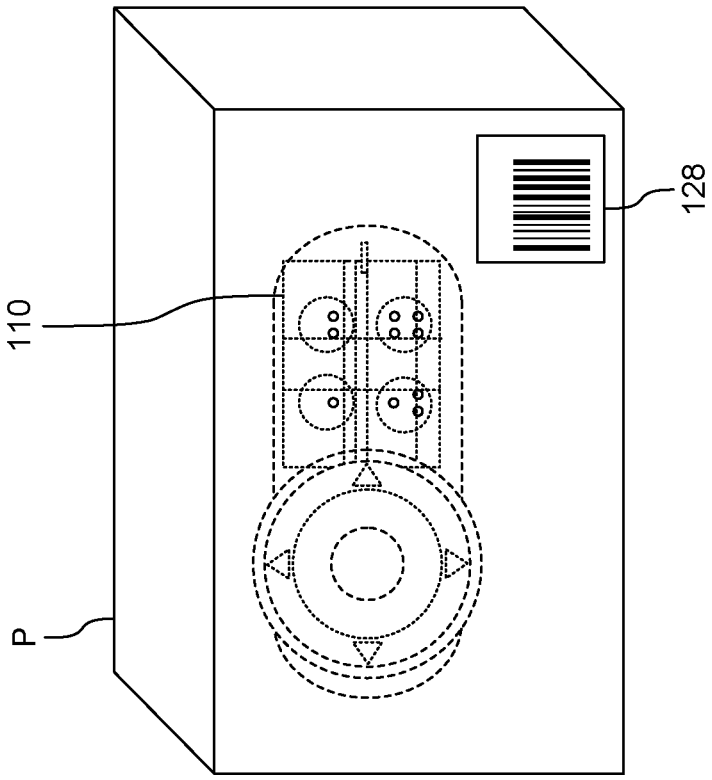

FIG. 7A

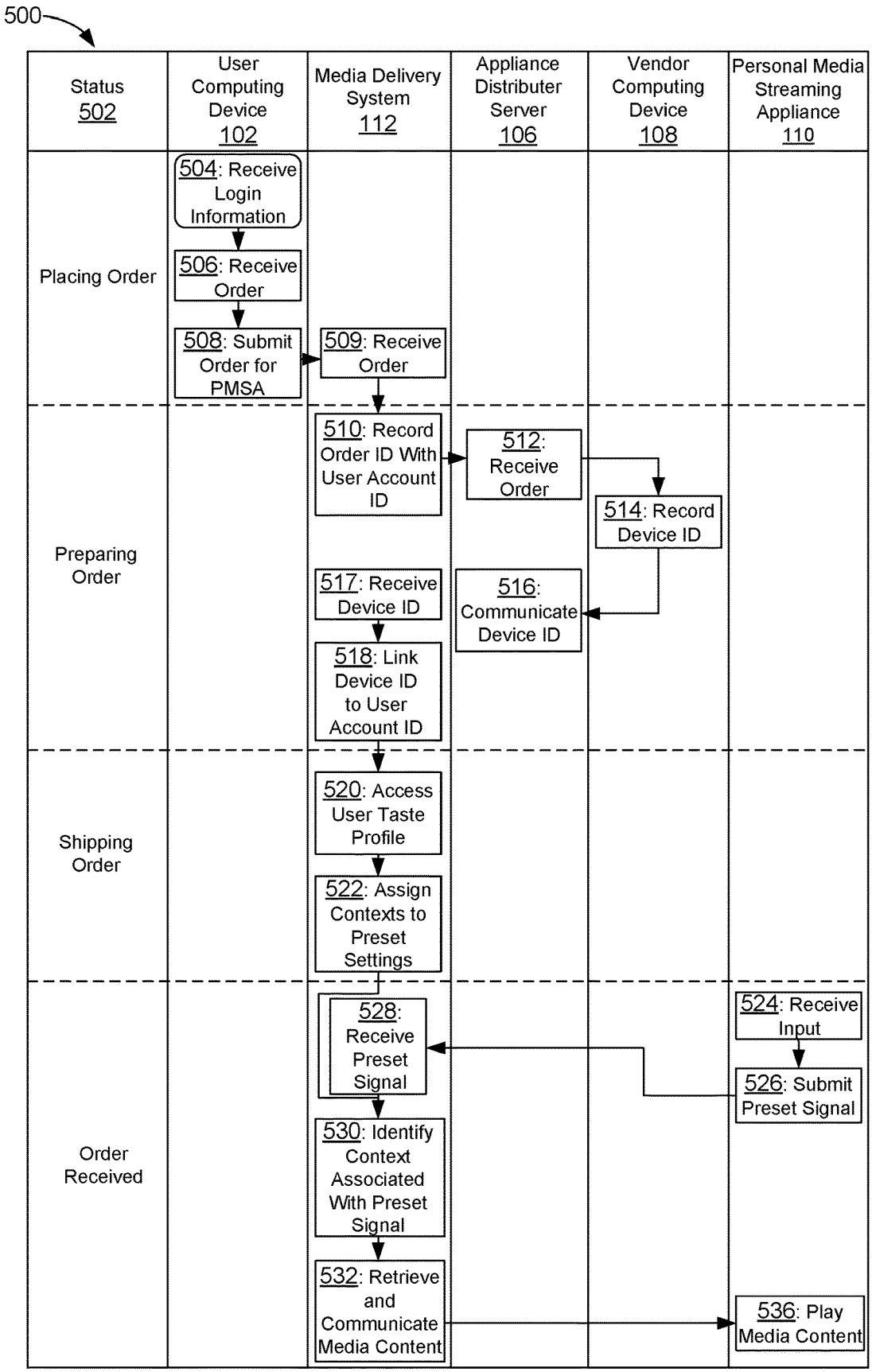
500
Status 502
User Computing Device 102
Media Delivery System 112
Appliance Distributer Server 106
Vendor Computing Device 108
Personal Media Streaming Appliance 110
Placing Order
504: Receive Login Information
506: Receive Order
508: Submit Order for PMSA
509: Receive Order
Preparing Order
510: Record Order ID With User Account ID
512: Receive Order
514: Record Device ID
517: Receive Device ID
516: Communicate Device ID
518: Link Device ID to User Account ID
Shipping Order
520: Access User Taste Profile
522: Assign Contexts to Preset Settings
Order Received
528: Receive Preset Signal
524: Receive Input
526: Submit Preset Signal
530: Identify Context Associated With Preset Signal
532: Retrieve and Communicate Media Content
536: Play Media Content

FIG. 8

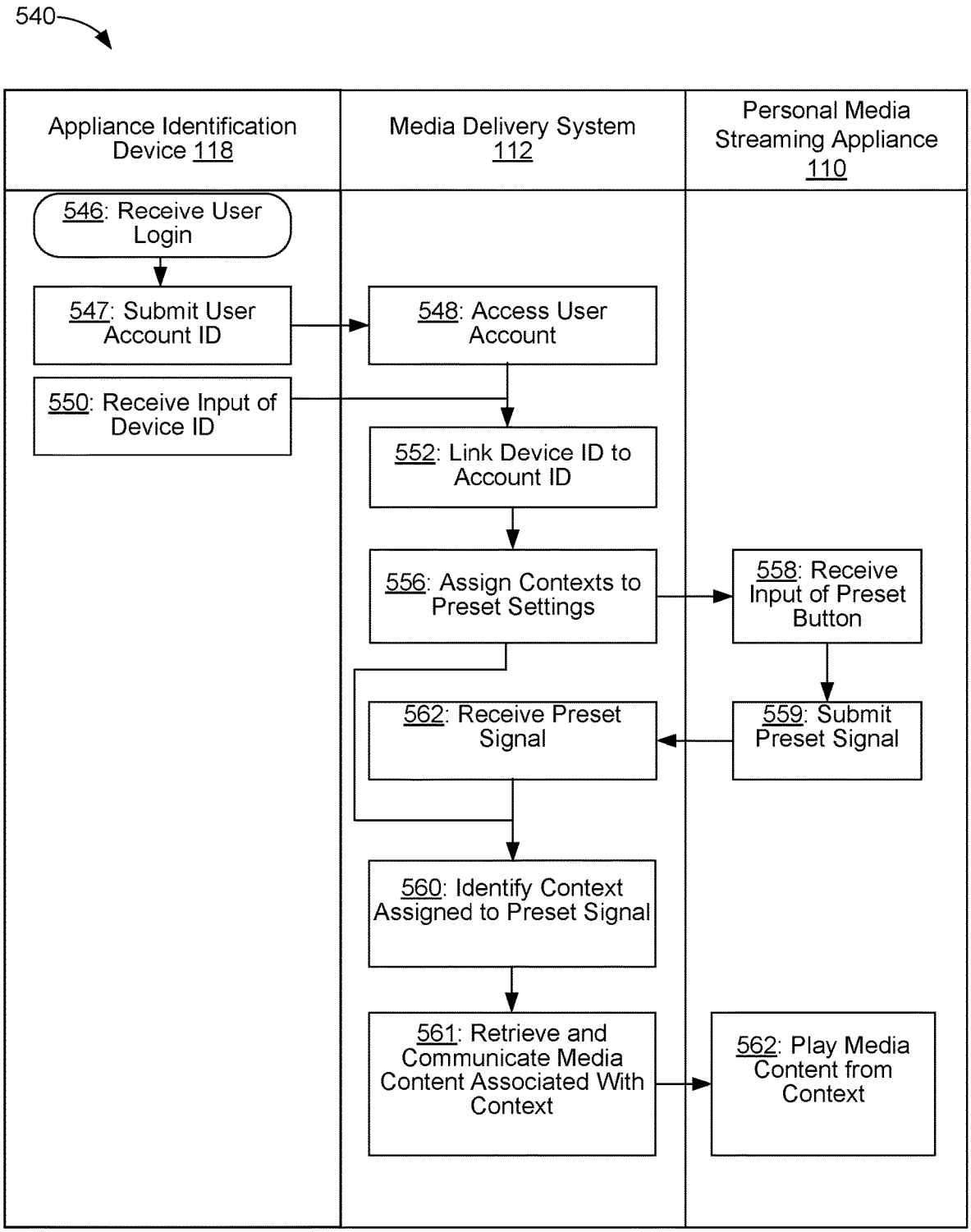
540
Appliance Identification Device 118
Media Delivery System 112
Personal Media Streaming Appliance 110
546: Receive User Login
547: Submit User Account ID
548: Access User Account
550: Receive Input of Device ID
552: Link Device ID to Account ID
556: Assign Contexts to Preset Settings
558: Receive Input of Preset Button
559: Submit Preset Signal
562: Receive Preset Signal
560: Identify Context Assigned to Preset Signal
561: Retrieve and Communicate Media Content Associated With Context
562: Play Media Content from Context

FIG. 9

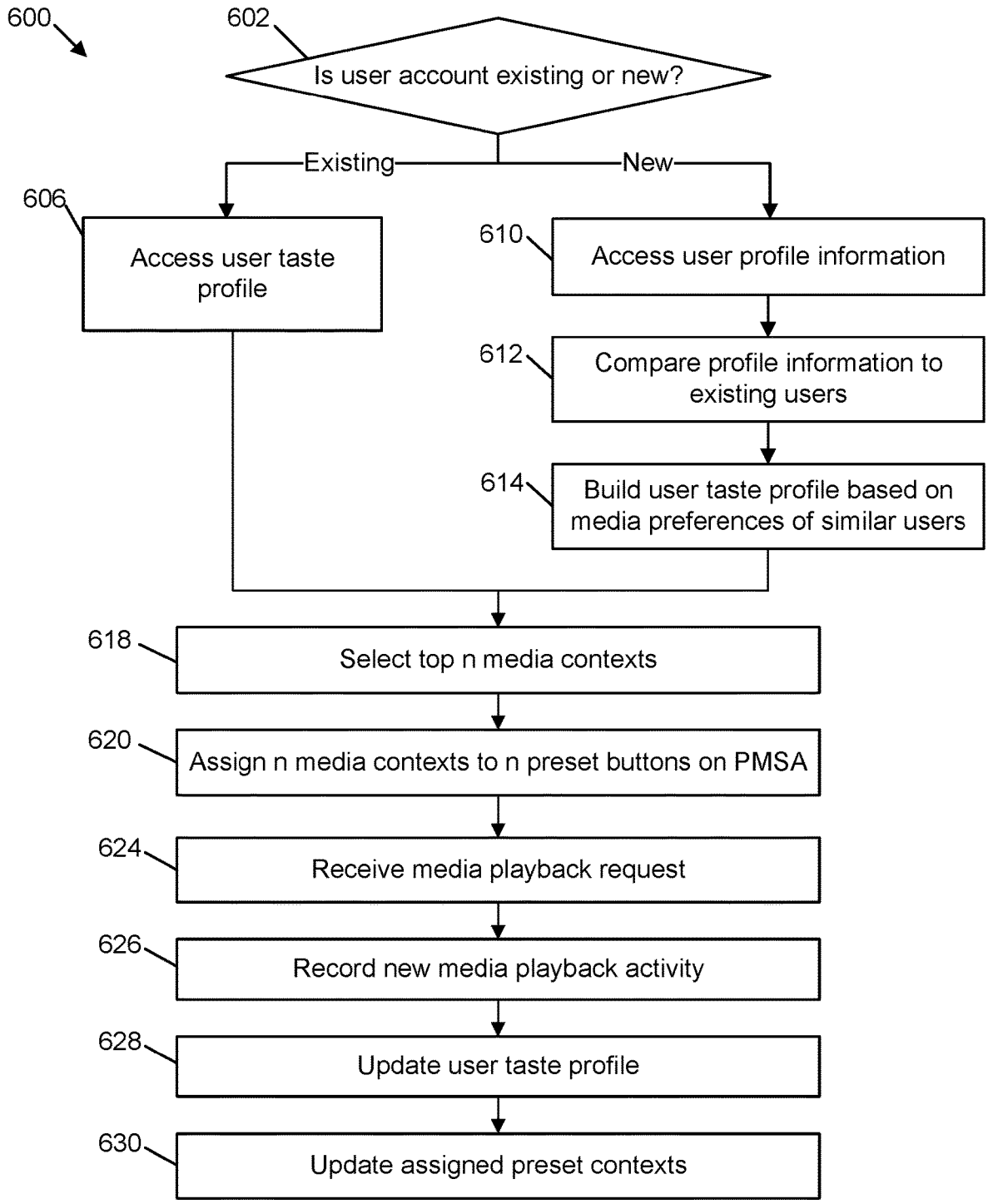
600
602
Is user account existing or new?
Existing
New
606
Access user taste profile
610
Access user profile information
612
Compare profile information to existing users
614
Build user taste profile based on media preferences of similar users
618
Select top n media contexts
620
Assign n media contexts to n preset buttons on PMSA
624
Receive media playback request
626
Record new media playback activity
628
Update user taste profile
630
Update assigned preset contexts

FIG. 10

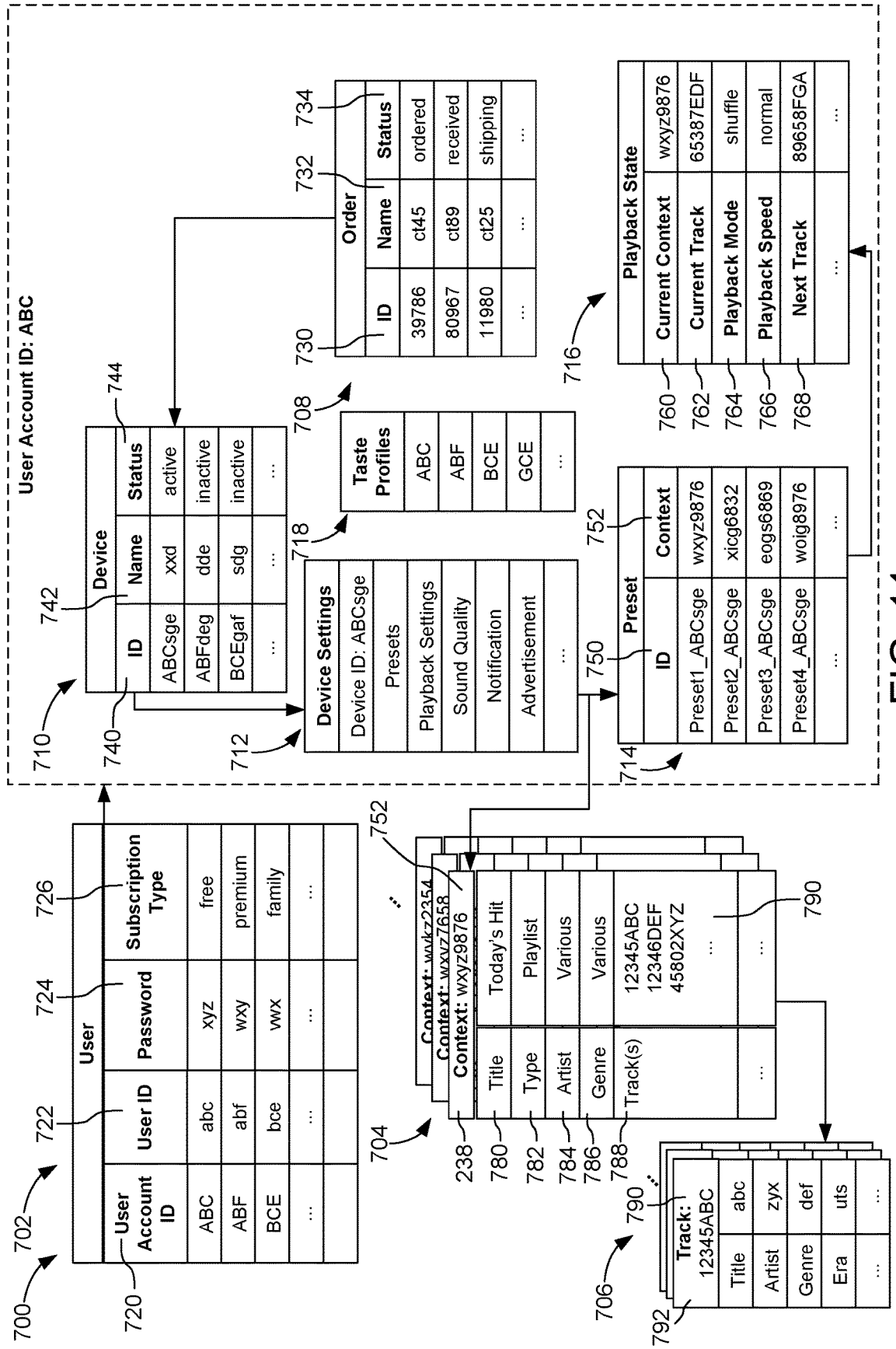
User Account ID: ABC
Device
ID
Name
Status
ABCsge
xxd
active
ABFdeg
dde
inactive
BCEgaf
sdg
inactive
Order
ID
Name
Status
39786
ct45
ordered
80967
ct89
received
11980
ct25
shipping
Taste Profiles
ABC
ABF
BCE
GCE
Device Settings
Device ID: ABCsge
Presets
Playback Settings
Sound Quality
Notification
Advertisement
Preset
ID
Context
Preset1_ABCsge
wxyz9876
Preset2_ABCsge
xicg6832
Preset3_ABCsge
eogs6869
Preset4_ABCsge
woig8976
Playback State
Current Context
wxyz9876
Current Track
65387EDF
Playback Mode
shuffle
Playback Speed
normal
Next Track
89658FGA
User
User Account ID
User ID
Password
Subscription Type
ABC
abc
xyz
free
ABF
abf
wxy
premium
BCE
bce
wx
family
Context: wxyz2354
Context: wxyz7658
Context: wxyz9876
Title
Type
Artist
Genre
Track(s)
Today's Hit
Playlist
Various
Various
12345ABC
12346DEF
45802XYZ
Track: 12345ABC
Title
Artist
Genre
Era
abc
zyx
def
uts
700
702
704
706
710
712
714
716
718
720
722
724
726
730
732
734
738
740
742
744
750
752
760
762
764
766
768
780
782
784
786
788
790
792

FIG. 11

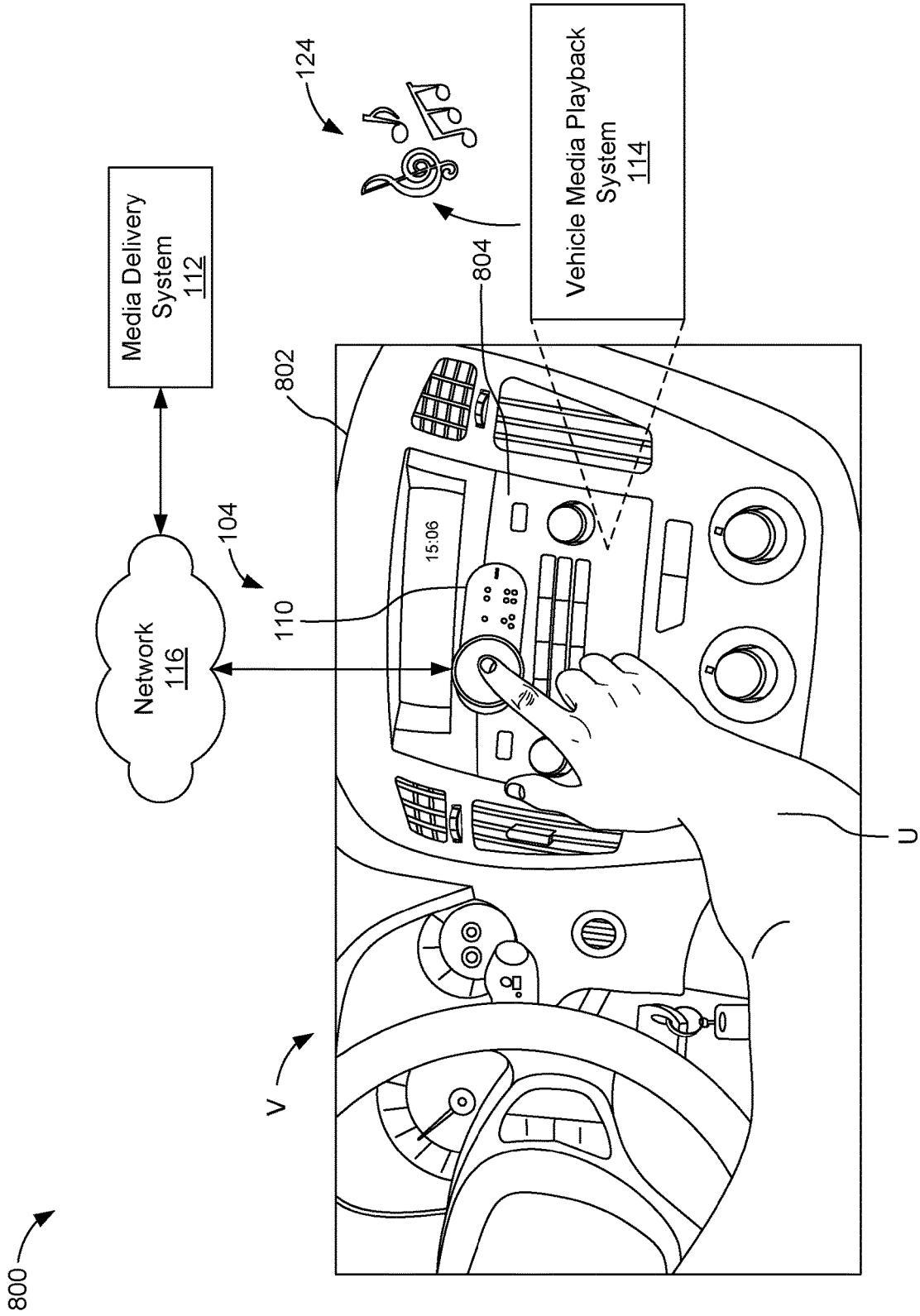
800
Media Delivery System 112
Network 116
104
110
802
804
124
Vehicle Media Playback System 114
15:06
U
V

FIG. 12

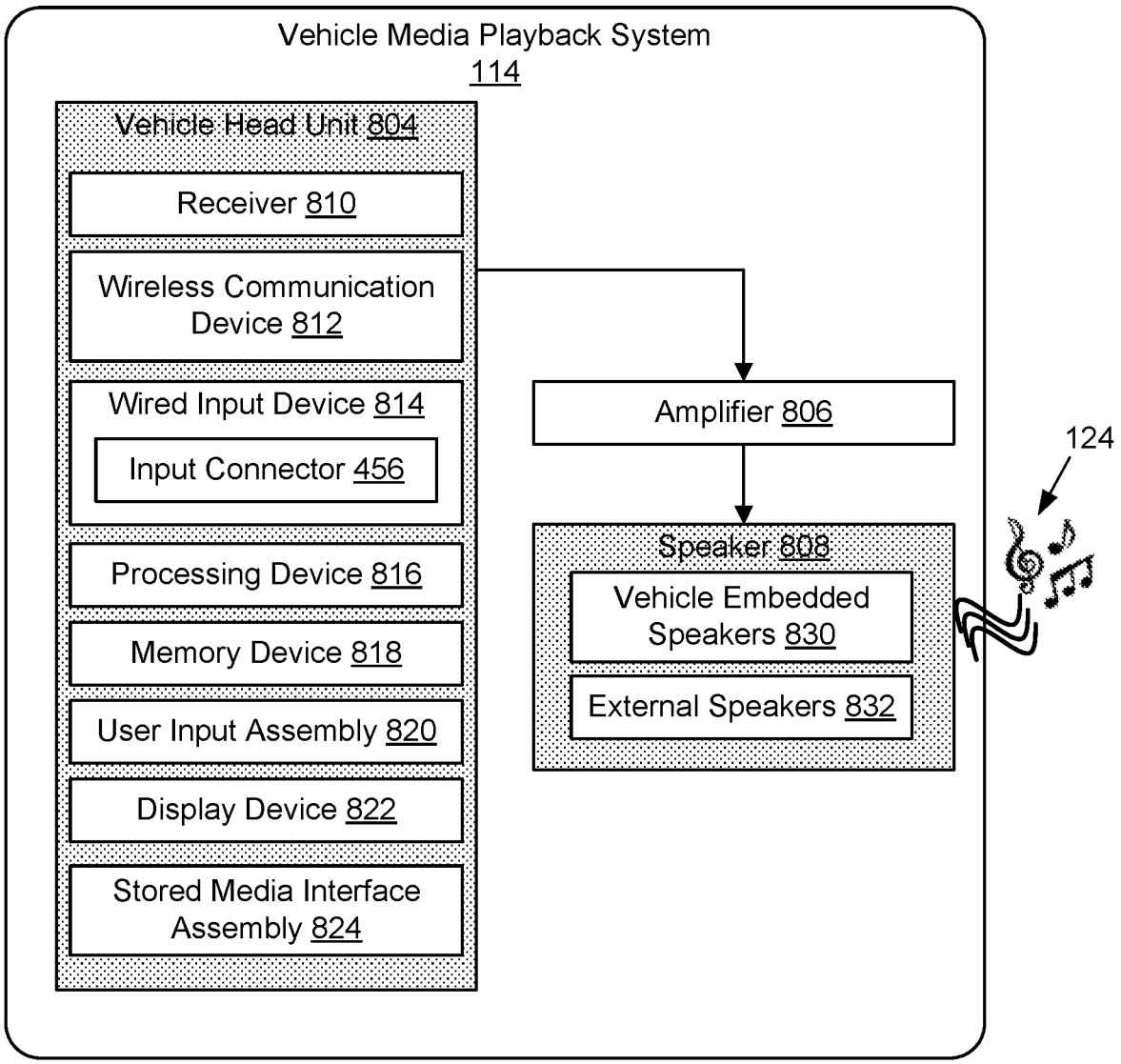
Vehicle Media Playback System
114
Vehicle Head Unit 804
Receiver 810
Wireless Communication Device 812
Wired Input Device 814
Input Connector 456
Processing Device 816
Memory Device 818
User Input Assembly 820
Display Device 822
Stored Media Interface Assembly 824
Amplifier 806
Speaker 808
Vehicle Embedded Speakers 830
External Speakers 832
124

FIG. 13

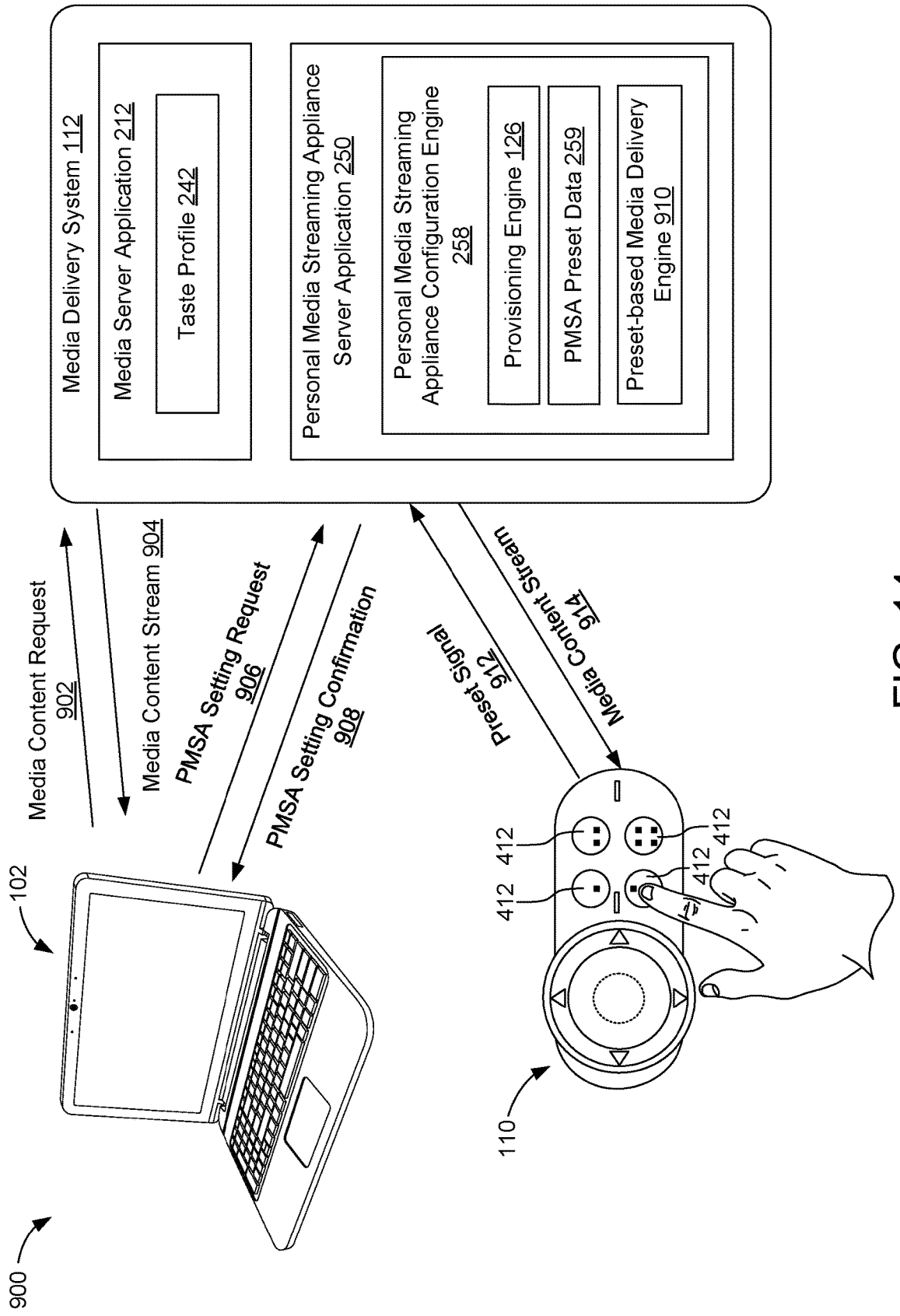
Media Delivery System 112
Media Server Application 212
Taste Profile 242
Personal Media Streaming Appliance Server Application 250
Personal Media Streaming Appliance Configuration Engine 258
Provisioning Engine 126
PMSA Preset Data 259
Preset-based Media Delivery Engine 910
Media Content Request 902
Media Content Stream 904
PMSA Setting Request 906
PMSA Setting Confirmation 908
Preset Signal 912
Media Content Stream 914
102
110
412
900

FIG. 14

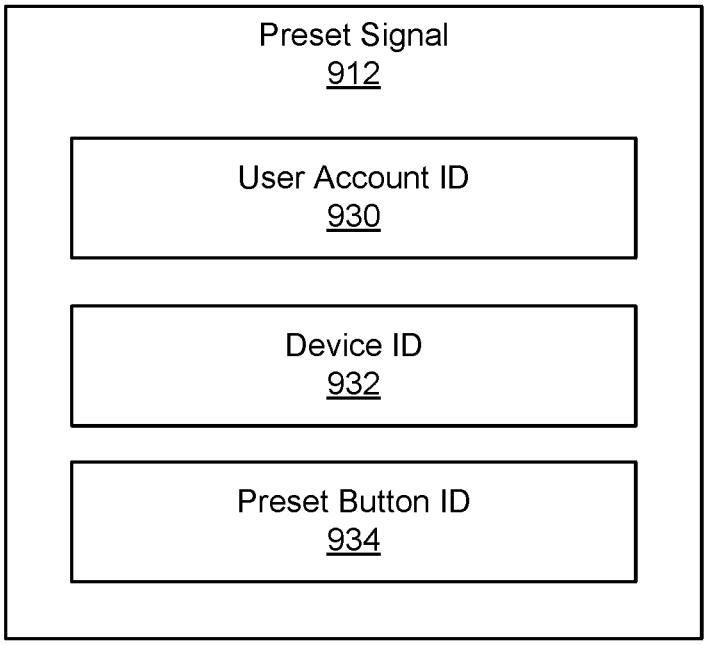
Preset Signal
912
User Account ID
930
Device ID
932
Preset Button ID
934

FIG. 15

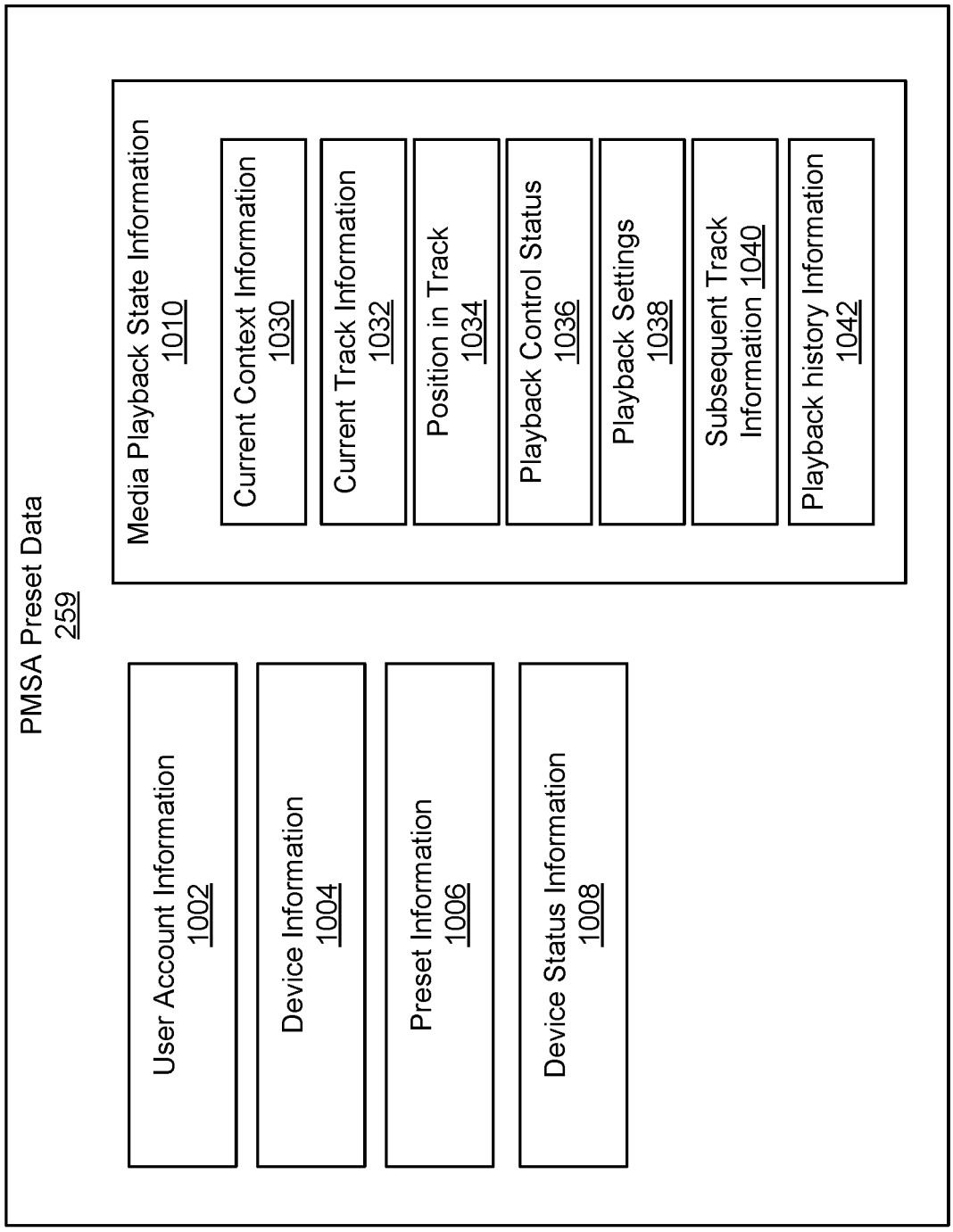
PMSA Preset Data
259
User Account Information
1002
Device Information
1004
Preset Information
1006
Device Status Information
1008
Media Playback State Information
1010
Current Context Information
1030
Current Track Information
1032
Position in Track
1034
Playback Control Status
1036
Playback Settings
1038
Subsequent Track
Information 1040
Playback history Information
1042

FIG. 16

METHODS AND SYSTEMS FOR PROVISIONING SETTINGS OF A MEDIA PLAYBACK DEVICE

CROSS-REFERENCE TO RELATED APPLICATIONS

This application is a Continuation application of U.S. application Ser. No. 15/968,154, filed Apr. 20, 2018, now U.S. Pat. No. 10,367,687, issued Jul. 30, 2019, which is incorporated by reference herein in its entirety.

BACKGROUND

Many people enjoy consuming media content while travelling or during other activities. When driving, for example, drivers and passengers listen to audio content, such as songs, albums, podcasts, audiobooks, and other types of audible content from devices that are built into the vehicle such as terrestrial and satellite radios and fixed media players that can playback media content stored on CDs, USB drives, or SD cards. Some vehicles have internet access and can stream or download media content.

Alternatively, a mobile device, such as a smartphone or a tablet running music streaming applications can be used. However, mobile devices are not well suited for a vehicle environment for various reasons, such as legal restrictions and sophisticated user interfaces that are not convenient for use in a vehicle.

Typical media content services, devices, and applications for providing media content require multiple steps to prepare an account associated with the media content service, the device, and application in order to provide personalized media content to a user. For example, it is common for users to be required to log into their device, establish wireless connections, and/or log into their account. Preferences have to be set by the user to provide a personalized media content experience. Even once a device is logged into a music streaming service, at least the initial use of the service is not completely personalized for the user.

Many users desire a personalized media consuming experience. For example, a user can access almost limitless catalogs of media content through various free or fee-based media delivery services, such as media streaming services. Users can use mobile devices or other media playback devices to access large catalogs of media content. Due to such large collections of media content, it is desired to make it possible to customize a selection of media content to match users' individual tastes and preferences so that users can consume their favorite media content while traveling in a vehicle.

Many vehicles include a built-in media playback device, such as a radio or a fixed media player, such as a player that can play media content from a CD, USB drives, or SD cards. However, the media content that is delivered using these built in vehicle media playback devices is greatly limited and is not flexible or customizable to the user.

Alternatively, a mobile device, such as a smartphone or a tablet, can be used by a user to enjoy a personalized and flexible music consuming experience in a vehicle by running music streaming applications thereon. However, the music streaming application is not automatically ready to run and play media content, and the user needs to pick up the mobile device and open the music streaming application and control a sophisticated user interface to play media content.

One technical challenge associated with providing personalized media content to a device in a vehicle is provisioning the device. Users typically need to provide one or more inputs to a new media streaming device or application in order for personalized content to be played by the device or application.

US 2002/0046084 describes an internet radio device for portable applications and uses such as in an automobile. The internet radio device is configured by a user after purchase using a remote computer with an internet connection. The device accesses the internet to receive updates to configurations.

US 2010/0077094 describes a system and method for updating media content in a vehicle. Media content is received through a home network and is stored on a device in the vehicle. The media content can be updated using an application operated by a user.

No technical solution has been found to the problem of provisioning a media playback device while it is within the supply chain channel prior to delivery.

There exists a need for a media playback system that is provisioned at the early stages of the supply chain so that upon arrival it is provisioned for use and control of personalized media content playback.

SUMMARY

In general terms, the present disclosure relates to provisioning of a personal media streaming appliance. In one possible configuration and by non-limiting example, the personal media streaming appliance is set up to play personalized media content upon first use of the appliance without additional input from a user. Various aspects are described in this disclosure, which include, but are not limited to, the following aspects.

One aspect is a method for customizing a personal media streaming appliance (PMSA). A media delivery system receives a user account identifier associated with a user media streaming account. The media delivery system also receives an appliance identifier associated with the PMSA. The user account identifier and appliance identifier are linked together. One or more media contexts are assigned to settings of the PMSA. At least one of the settings is associated with a preset button the PMSA. A preset signal is received at the media delivery system from the PMSA. The preset signal includes at least a preset button identifier and a user account identifier. The media delivery system retrieves media content matching a media context assigned to the setting associated with the preset button corresponding to the preset button identifier. The media content is communicated to the PMSA for playback.

Another aspect is a system for providing personalized media content to a PMSA. The system includes a media delivery system. The media delivery system includes a media content server having a processing device, a memory device, and a media server application. The media server application is configured to provide a media streaming service. The media delivery system further includes a personal media streaming appliance server having a processing device, a memory device, and a personal media streaming appliance configuration engine. The personal media streaming appliance configuration engine is configured to link a user media streaming account to a PMSA and determine personalized content to provide to the PMSA upon first use.

BRIEF DESCRIPTION OF THE DRAWINGS

FIG. **1** illustrates an example system for provisioning settings of a personal media streaming appliance (PMSA) system.

FIG. **2** is a block diagram of an example embodiment of the personal media streaming appliance (PMSA) system of FIG. **1**.

FIG. **3** is a block diagram of an example embodiment of the media delivery system of FIG. **1**.

FIG. **4** is a block diagram of an example embodiment of the user computing device of FIG. **1**.

FIG. **5** is a block diagram of an example embodiment of the vendor computing device of FIG. **1**.

FIG. **6** schematically illustrates an example embodiment of the PMSA system of FIG. **1**.

FIG. **7**A illustrates an example embodiment of the PMSA system including an appliance identification marker.

FIG. **7**B illustrates a further example embodiment of the PMSA system including an appliance identification marker

FIG. **8** is a flow diagram illustrating an example method of provisioning a PMSA system ordered in association with a user media streaming account.

FIG. **9** is a flow diagram illustrating an example method of provisioning a PMSA system at the time of first use.

FIG. **10** is a flow diagram illustrating an example method of assigning media contexts to preset settings of a PMSA system.

FIG. **11** illustrates an example data structure of a database of the media delivery system of FIG. **1**.

FIG. **12** illustrates an example system for streaming media content for playback in a vehicle.

FIG. **13** is a block diagram of an example embodiment of the vehicle media playback system of FIG. **12**.

FIG. **14** illustrates an example ecosystem for the PMSA system of FIG. **1**.

FIG. **15** is a block diagram of the preset signal of FIG. **14**.

FIG. **16** is a block diagram of the PMSA preset data of FIG. **14**.

DETAILED DESCRIPTION

Various embodiments will be described in detail with reference to the drawings, wherein like reference numerals represent like parts and assemblies throughout the several views.

As used herein, the term "media content" refers to audio content, video content, and combinations thereof. Examples of audio content include songs, albums, playlists, radio stations, podcasts, audiobooks, and other audible media content items. Examples of video content include movies, music videos, television programs, and other visible media content items. In many cases, video content also includes audio content.

As used herein, the term "vehicle" can be any machine that is operable to transport people or cargo. Vehicles can be motorized or non-motorized. Vehicles can be for public or private transport. Examples of vehicles include motor vehicles (e.g., cars, trucks, buses, motorcycles), rail vehicles (e.g., trains, trams), tracked vehicles, watercraft (e.g., ships, boats), aircraft, human-powered vehicles (e.g., bicycles), wagons, and other transportation means.

A user can drive a vehicle or ride as a passenger for travelling. As used herein, the term "travel" and variants thereof refers to any activity in which a user is in transit between two locations.

As used herein, the term "provisioning" refers to a process in which a device is prepared for operation by a user. Provisioning can include steps such as building the device, installing software on the device, establishing connections with networks, and setting up user access. In some instances, provisioning can include setting up user preferences and settings for the device.

The present disclosure generally relates to providing a personal media streaming appliance (PMSA) system **110** that is personalized to a particular user at the time the user first uses the PMSA. A media streaming account of the user is associated with the PMSA **110** before the first operation of the PMSA **110** to play media content. The user account **240** provides information about the user's preferences for consuming media content. The user account **240** stores assignments of particular contexts of media content with controls on the PMSA **110**. This setup provides the PMSA **110** with media content to play that the user is likely to enjoy.

A media delivery system **112** associates the user's media streaming account **240** with the PMSA **110**. This occurs before the PMSA **110** receives any inputs to play media content. In some embodiments, the PMSA **110** is provisioned with a particular user's media streaming account before the PMSA **110** is first operated to play media content.

Preset settings are automatically generated for each PMSA **110** based on the associated user account **240**. For example, preset buttons **412** on the PMSA **110** can be assigned media contexts that are selected based on a taste profile **242** associated with a user's media streaming account. One example of a taste profile **242** provides a history of the user's media consumption. Media content is selected that is similar to media content that is in the history of the user's media streaming account.

In one embodiment, a user computing device **102** receives an input to log into the media streaming account. The media streaming account is associated with a user operating the user computing device **102**. The user computing device **102** then receives input to place an order for a PMSA **110** to be delivered to an address of the user. The user computing device **102** communicates the order to the media delivery system **112**. The media delivery system **112** records this order. The order is recorded by linking an order identifier (typically a number or other series of characters) with an account identifier associated with the user's account **240** (e.g. a unique account ID number or username).

The media delivery system **112** can then submit a request to a vendor to fulfill the order. In some instances, the media delivery system **112** collects multiple orders for PMSA's and submits one request for multiple appliances to the vendor manufacturer. The request includes at least an order number for each PMSA.

The manufacturer vendor records a unique appliance identifier **128** after the PMSA **110** is ready to ship. A vendor computing device **108** submits that appliance identifier **128** to the media delivery system **112**. The appliance identifier **128** can be a number or other series of characters. The appliance identifier **128** can be recorded by scanning a barcode or QR code. The appliance identifier **128** is submitted along with its corresponding order number to the media delivery system **112**.

Upon receiving the appliance identifier **128**, the media delivery system **112** matches the order identifier with the account identifier. The appliance identifier **128** corresponding to the order identifier is then linked to the account identifier in the user's account **240**. The device identifier is stored in a table along with the account identifier.

In another embodiment, a user can purchase a PMSA **110** from a retailer. In this example, the user account is associated with the PMSA **110** at the time of purchase. The PMSA

110 still receives personalized settings by linking to a user's media streaming account and will provide personalized media content upon first use.

In either embodiment, the media delivery system **112** utilizes a user taste profile **242** from the user account to assign contexts to each of a plurality of settings on the PMSA **110**. The user's taste profile **242** could change between the time that the PMSA **110** is ordered and when the PMSA **110** is delivered. As a result, the assigned contexts will be updated so that the PMSA **110** will have the most up to date personalization settings upon first use.

In some embodiments, the appliance provides a simplified user interface so that a user can easily control playback of media content in a vehicle while maintaining his or her focus on other tasks such as driving or navigating. For example, the appliance has a limited set of physical control elements that are intuitively controllable for playback of media content with little (often only one) input. Examples of such physical control elements include a rotatable knob and one or more physically-depressible buttons.

In some embodiments, the appliance also provides an output interface that can be easily connected to a vehicle audio system. Such output interfaces can include an auxiliary input port or Bluetooth. Output interfaces transmit media content from the appliance to the vehicle audio system for playback in the vehicle.

FIG. **1** illustrates an example system **100** for provisioning a personal media streaming appliance (PMSA). The system **100** includes at least a media delivery system **112**, a network **116**, an appliance identifying computing device **102**, **108**A, **108**B and a personal media streaming appliance (PMSA) **110**. The media delivery system **112** operates to provide media content through one or more media playback devices. Media playback devices are configured to play media content and can include the personal media streaming appliance (PMSA) system **110**, a vehicle media playback system **114**, and the user computing device **102**.

The media delivery system **112** includes at least an appliance provisioning engine **126**. The appliance provisioning engine **126** is further described in FIG. **3**. In some embodiments, the appliance provisioning engine **126** is part of a system independent of the media delivery system **112**. The media delivery system **112** communicates with multiple servers, computing devices, and other network enabled devices.

The appliance distributor server **106** receives communications from the media delivery system **112** through the network **116**. The appliance distributor server **106** also communicates with a vendor computing device **108**. In some embodiments, the appliance distributor server **106** operates within a warehouse W.

In some embodiments, the vendor computing device **108**A, **108**B operates as an appliance identification device by using an appliance input device **122**. The appliance input device **122** can be, for example, a barcode scanner. The appliance input device **122** is used to input an appliance identifier **128**. An example of an appliance identifier **128** is a barcode, which is, for example, placed either directly on a PMSA **110** or its packaging P.

In some embodiments, an order is received by a user computing device **102** such as a laptop computer or a mobile device. The order data is associated with a user account for playing media content. In an example embodiment, input is provided to the user computing device **102** to order a PMSA **110**, for example through a user interface of the user computing device **102**. The order is, in turn, communicated to a media delivery system **112** via the network **116**.

This order is received through the network **116** by the media delivery system **112**. The media delivery system **112** then forwards the order to the appliance distributor server **106** for fulfillment at the warehouse W.

After the order is fulfilled in the warehouse, a confirmation message is received at the media delivery system **112**. The confirmation message can be received from the appliance distributor server **106**, the vendor computing device **108**A, or any source having information regarding the status of the appliance order.

The packaged PMSA **110** is transported via a carrier directly to the user's address. For example, the PMSA **110** is transported on a truck T to an address specified in the order. In the example of FIG. **1**, the address may be for the user U's home. It should be understood that other transportation vehicles may be used in connection with the logistics of delivering the PMSA **110**. For example, a plane, train, or other automobile, can be used instead of truck T and still be within the scope of the invention.

In some embodiments, a confirmation message is received at the media delivery system **112** indicating that the PMSA **110** has been delivered at the address specified in the order. The confirmation message can be received from a user computing device **102**, the appliance distributor server **106**, a carrier computing device, or any other source having information regarding the status of the appliance delivery.

In other examples, one or more units of PMSA **110** may be transported to a retailer R for distribution to customers. In such examples, the PMSA **110** may be identified using an appliance ID input device **122** associated with a vendor computing device **108**B at the retailer R. The vendor computing device **108**B operates as an appliance identification device and communicates through the network **116** with the media delivery system **112** to identify a PMSA **110** via an appliance identifier **128**. As will be described below, in some embodiments, this identification process can be used to link the PMSA **110** with a user account.

Once the PMSA **110** arrives at its destination address, it is ready to be installed in a vehicle V. At this stage, the PMSA **110** is powered on. Media content **124** associated with the user account is communicated to the PMSA **110** and can be played over a vehicle media playback system **114**. In some embodiments, the media content **124** is presented in the form of a playlist that includes information sufficient to cause a media delivery system **112** to deliver media content **124** (e.g., by downloading it or streaming).

The system **100** detects that a PMSA **110** has been purchased and associates the PMSA **110** with a media playback account that is associated with the purchase. In turn, the system **100** links the media playback account to the PMSA **110** so that upon the first use of the PMSA **110**, personalized media content is available for playback. In some embodiments, the personalized media content is available for playback in a vehicle V without any additional set-up steps.

The PMSA system **110** operates to receive media content that is provided (e.g., streamed, transmitted, etc.) by a system external to the PMSA system **110**, such as the media delivery system **112**. The PMSA **110** can then transmit the media content to the vehicle media playback system **114** for playback. In some embodiments, the PMSA system **110** is a portable device which can be carried into and used in the vehicle V. The PMSA system **110** can be mounted to a structure of the vehicle V, such as the dashboard. In other embodiments, the PMSA system **110** can be configured to be built in a structure of the vehicle V. An example of the

PMSA system **110** is illustrated and described in more detail with reference to FIGS. **2** and **6**.

The vehicle media playback system **114** operates to receive media content from the PMSA system **110**. The vehicle media playback system **114** generates a media output **124** to play the media content in the vehicle V. An example of the vehicle media playback system **114** is illustrated and described in further detail herein, such as with reference to FIG. **13**.

The network **116** is a data communication network through which the PMSA system **110** and the media delivery system **112** can communicate. In some embodiments, the user computing device **102** can also communicate with the media delivery system **112** across the network **116**. The network **116** typically includes a set of computing devices and communication links between the computing devices. The computing devices in the network **116** use the links to enable communication among the computing devices in the network. The network **116** can include one or more routers, switches, mobile access points, bridges, hubs, intrusion detection devices, storage devices, standalone server devices, blade server devices, sensors, desktop computers, firewall devices, laptop computers, handheld computers, mobile telephones, vehicular computing devices, and other types of computing devices.

In various embodiments, the network **116** includes various types of communication links. For example, the network **116** can include wired and/or wireless links, including cellular, Bluetooth, ultra-wideband (UWB), 802.11, ZigBee, and other types of wireless links. Furthermore, in various embodiments, the network is implemented at various scales. For example, the network **116** can be implemented as one or more vehicle area networks, local area networks (LANs), metropolitan area networks, subnets, wide area networks (WAN) (such as the Internet), or can be implemented at another scale. Further, in some embodiments, the network **116** includes multiple networks, which may be of the same type or of multiple different types.

In some embodiments, the network **116** can also be used for data communication between other media playback devices and the media delivery system **112**. Because the network **116** is configured primarily for data communication between computing devices in the vehicle V and computing devices outside the vehicle V, the network **116** is also referred to herein as an out-of-vehicle network for out-of-vehicle data communication.

FIG. **2** is a block diagram of an example embodiment of the PMSA system **110** of the media streaming system **100** shown in FIG. **1**. In this example, the PMSA system **110** includes a user input device **130**, a display device **132**, a wireless data communication device **134**, a movement detection device **136**, a location determining device **138**, a media content output device **140**, an in-vehicle wireless communication device **142**, a power supply **144**, a power input device **146**, a processing device **148**, and a memory device **150**.

In some embodiments, the PMSA system **110** is a system dedicated for streaming personalized media content in a vehicle environment. At least some embodiments of the PMSA system **110** have limited functionalities specifically selected for streaming media content from the media delivery system **112** at least via the network **116** and/or for providing other services associated with the media content streaming service. The PMSA system **110** may have no other general use such as found in other computing devices, such as smartphones, tablets, and other smart devices.

For example, in some embodiments, when the PMSA system **110** is powered up, the PMSA system **110** is configured to automatically activate a software application. The software application is configured to perform the media content streaming and media playback operations of the PMSA system **110** using at least one of the components, devices, and elements of the PMSA system **110**. In some embodiments, the software application of the PMSA system **110** is configured to continue running until the PMSA system **110** is powered off or powered down to a predetermined level.

The user input device **130** operates to receive a user input **152** for controlling the PMSA system **110**. As illustrated, the user input **152** can include a manual input **154** and a voice input **156**. In some embodiments, the user input device **130** includes a manual input device **160** and a sound detection device **162**.

The manual input device **160** operates to receive the manual input **154** for controlling playback of media content via the PMSA system **110**. In addition, in some embodiments, the manual input **154** is received for managing various pieces of information transmitted via the PMSA system **110** and/or controlling other functions or aspects associated with the PMSA system **110**.

In some embodiments, the manual input device **160** includes one or more manual control elements configured to receive various manual control actions, such as pressing actions and rotational actions. As described herein, the physical input device **160** includes a manual control knob **410** and one or more physical buttons **412**, which is further illustrated and described with reference to FIG. **6**.

The sound detection device **162** operates to detect and record sounds from proximate to the PMSA system **110**. For example, the sound detection device **162** can detect sounds including the voice input **156**. In some embodiments, the sound detection device **162** includes one or more acoustic sensors configured to detect sounds proximate to the PMSA system **110**. For example, acoustic sensors of the sound detection device **162** includes one or more microphones. Various types of microphones can be used for the sound detection device **162** of the PMSA system **110**.

In some embodiments, the voice input **156** is a user's voice for controlling playback of media content via the PMSA system **110**. In addition, the voice input **156** manages various data transmitted via the PMSA system **110** and/or controlling other functions or aspects associated with the PMSA system **110**.

In some embodiments, the sound detection device **162** is configured to cancel noises from the received sounds so that a desired sound (e.g., the voice input **156**) is clearly identified. For example, the sound detection device **162** can include one or more noise-canceling microphones which are configured to filter ambient noise from the voice input **156**. In addition or alternatively, a plurality of microphones of the sound detection device **162** are arranged at different locations in a body of the PMSA system **110** and/or oriented in different directions with respect to the body of the PMSA system **110**, so that ambient noise is effectively canceled from the voice input **156** or other desired sounds being identified.

In some embodiments, the sounds detected by the sound detection device **162** can be processed by the sound processing engine **180** of the PMSA system **110** as described below.

Referring still to FIG. **2**, the display device **132** operates to display information to the user U. Examples of such

information include media content playback information, notifications, and other information.

In some embodiments, the display device **132** operates as a display screen only and is not capable of receiving a user input. By receiving the manual input **154** only via the manual input device **160** and disabling receipt of manual input via the display device **132**, the user interface of the PMSA system **110** is simplified so that the user U can control the PMSA system **110** while maintaining focus on other activities in the vehicle V. It is understood however that, in other embodiments, the display device **132** is configured as a touch-sensitive display screen that operates as both a display screen and a user input device. In yet other embodiments, the PMSA system **110** does not include a display device.

As described herein, in some embodiments, the display device **132** is arranged at the manual input device **160**. In other embodiments, the display device **132** is arranged separate from the manual input device **160**.

The wireless data communication device **134** operates to enable the PMSA system **110** to communicate with one or more computing devices at a remote location that is outside the vehicle V. In the illustrated example, the wireless data communication device **134** operates to connect the PMSA system **110** to one or more networks outside the vehicle V, such as the network **116**. For example, the wireless data communication device **134** is configured to communicate with the media delivery system **112** and receive media content from the media delivery system **112** at least partially via the network **116**. The wireless data communication device **134** can be a wireless network interface of various types which connects the PMSA system **110** to the network **116**. Examples of the wireless data communication device **134** include wireless wide area network (WWAN) interfaces, which use mobile telecommunication cellular network technologies. Examples of cellular network technologies include LTE, WiMAX, UMTS, CDMA2000, GSM, cellular digital packet data (CDPD), and Mobitex. In some embodiments, the wireless data communication device **134** is configured as a cellular network interface to facilitate data communication between the PMSA system **110** and the media delivery system **112** over cellular network.

The movement detection device **136** can be used to detect movement of the PMSA system **110** and the vehicle V. In some embodiments, the movement detection device **136** is configured to monitor one or more factors that are used to determine movement of the vehicle V. The movement detection device **136** can include one or more sensors that are configured to detect movement, position, and/or orientation of the PMSA system **110**. As an example, the movement detection device **136** is operable to determine an orientation of the PMSA system **110**. The movement detection device **136** can detect changes in the determined orientation and interpret those changes as indicating movement of the PMSA system **110**.

In some embodiments, the movement detection device **136** includes an accelerometer. In other embodiments, the movement detection device **136** includes a gyroscope. Other sensors can also be used for the movement detection device **136**, such as a magnetometer, a GPS receiver, an altimeter, an odometer, a speedometer, a shock detector, a vibration sensor, a proximity sensor, and an optical sensor (e.g., a light sensor, a camera, and an infrared sensor).

The location determining device **138** is a device that determines the location of the PMSA system **110**. In some embodiments, the location determining device **138** uses one or more of Global Positioning System (GPS) technology (which may receive GPS signals), Global Navigation Satellite System (GLONASS) technology, cellular triangulation technology, network-based location identification technology, Wi-Fi positioning systems technology, and combinations thereof.

The media content output device **140** is an interface that enables the PMSA system **110** to transmit media content to the vehicle media playback system **114**. Some embodiments of the PMSA system **110** do not have a speaker and thus cannot play media content independently. In these embodiments, the PMSA system **110** is not regarded as a standalone device for playing media content. Instead, the PMSA system **110** transmits media content to another media playback device, such as the vehicle media playback system **114** to enable the other media playback device to play the media content, such as through the vehicle stereo system.

As illustrated, the PMSA system **110** (e.g., a media content processing engine **176** thereof in FIG. **2**) can convert media content to a media content signal **164**, the media content output device **140** transmits the media content signal **164** to the vehicle media playback system **114**. The vehicle media playback system **114** can play the media content based on the media content signal **164**. For example, the vehicle media playback system **114** operates to convert the media content signal **164** into a format that is readable by the vehicle media playback system **114** for playback.

In some embodiments, the media content output device **140** includes an auxiliary (AUX) output interface **166** and a wireless output interface **168**.

The AUX output interface **166** is configured to connect the PMSA system **110** to the vehicle media playback system **114** via a cable (e.g., a media content output line **450** in FIG. **6**) of the PMSA system **110**. In some embodiments, as illustrated in FIG. **6**, the media content output line **450** extending from the PMSA system **110** is connected to an input connector **456** (e.g., an auxiliary input jack or port) of the vehicle media playback system **114**. As illustrated herein, the media content output line **450** can be of various types, such as an analog audio cable or a USB cable.

The wireless output interface **168** is configured to connect the PMSA system **110** to the vehicle media playback system **114** via a wireless communication protocol. In some embodiments, the wireless output interface **168** is configured for Bluetooth connection. In other embodiments, the wireless output interface **168** is configured for other types of wireless connection. In some embodiments, the wireless output interface **168** is incorporated into, or implemented with, the in-vehicle wireless communication device **142**. For example, when the media content output device **140** wirelessly transmits media content to the vehicle media playback system **114**, the in-vehicle wireless communication device **142** can be used to implement the wireless output interface **168** of the media content output device **140**.

Referring still to FIG. **2**, the in-vehicle wireless communication device **142** operates to establish a wireless data communication between computing devices in a vehicle V.

The power supply **144** is included in the example PMSA system **110** and is configured to supply electric power to the PMSA system **110**. In some embodiments, the power supply **144** includes at least one battery. The power supply **144** can be rechargeable. For example, the power supply **144** can be recharged using the power input device **146** that is connected to an external power supply. In some embodiments, the power supply **144** is included inside the PMSA system **110** and is not removable from the PMSA system **110**. In other embodiments, the power supply **144** is removable from the PMSA system **110**.

The power input device **146** is configured to receive electric power to maintain activation of components of the PMSA system **110**. As described herein, the power input device **146** is connected to a power source of the vehicle V (e.g., a vehicle power supply **440** in FIG. **6**) and use the electric power from the vehicle V as a primary power source to maintain activation of the PMSA system **110** over an extended period of time, such as longer than several minutes.

The processing device **148**, in some embodiments, comprises one or more central processing units (CPU). In other embodiments, the processing device **148** additionally or alternatively includes one or more digital signal processors, field-programmable gate arrays, or other electronic circuits.

The memory device **150** typically includes at least some form of computer-readable media. Computer readable media includes any available media that can be accessed by the PMSA system **110**. By way of example, computer-readable media include computer readable storage media and computer readable communication media.

Computer readable storage media includes volatile and nonvolatile, removable and non-removable media implemented in any device configured to store information such as computer readable instructions, data structures, program modules, or other data. Computer readable storage media includes, but is not limited to, random access memory, read only memory, electrically erasable programmable read only memory, flash memory and other memory technology, compact disc read only memory, blue ray discs, digital versatile discs or other optical storage, magnetic storage devices, or any other medium that can be used to store the desired information and that can be accessed by the PMSA system **110**. In some embodiments, computer readable storage media is non-transitory computer readable storage media.

Computer readable communication media typically embodies computer readable instructions, data structures, program modules or other data in a modulated data signal such as a carrier wave or other transport mechanism and includes any information delivery media. The term "modulated data signal" refers to a signal that has one or more of its characteristics set or changed in such a manner as to encode information in the signal. By way of example, computer readable communication media includes wired media such as a wired network or direct-wired connection, and wireless media such as acoustic, radio frequency, infrared, and other wireless media. Combinations of any of the above are also included within the scope of computer readable media.

The memory device **150** operates to store data and instructions. In some embodiments, the memory device **150** stores instructions for a media content cache **172**, a caching management engine **174**, a media content processing engine **176**, a manual input processing engine **178**, a sound processing engine **180**, a voice interaction engine **182**, and an appliance setting configuration engine **184**.

Some embodiments of the memory device **150** include the media content cache **172**. The media content cache **172** stores media content items, such as media content items that have been received from the media delivery system **112**. The media content items stored in the media content cache **172** may be stored in an encrypted or unencrypted format. In some embodiments, the media content cache **172** also stores metadata about media content items such as title, artist name, album name, length, genre, mood, era, etc. The media content cache **172** can further store playback information about the media content items and/or other information associated with the media content items.

The caching management engine **174** is configured to receive and cache media content in the media content cache **172** and manage the media content stored in the media content cache **172**. In some embodiments, when media content is streamed from the media delivery system **112**, the caching management engine **174** operates to cache at least a portion of the media content into the media content cache **172** so that at least a portion of the cached media content can be transmitted to the vehicle media playback system **114** for playback. In other embodiments, the caching management engine **174** operates to cache at least a portion of media content into the media content cache **172** while online so that the cached media content is retrieved for playback while the PMSA system **110** is offline.

The media content processing engine **176** is configured to process the media content that is received from the media delivery system **112**, and generate the media content signal **164** usable for the vehicle media playback system **114** to play the media content. The media content signal **164** is transmitted to the vehicle media playback system **114** using the media content output device **140**, and then decoded so that the vehicle media playback system **114** plays the media content in the vehicle V.

The manual input processing engine **178** operates to receive the manual input **154** via the manual input device **160**. In some embodiments, when the manual input device **160** is actuated (e.g., pressed or rotated) upon receiving the manual input **154**, the manual input device **160** generates an electric signal representative of the manual input **154**. The manual input processing engine **178** can process the electric signal and determine the input (e.g., command or instruction) corresponding to the manual input **154** to the PMSA system **110**. In some embodiments, the manual input processing engine **178** can perform a function requested by the manual input **154**, such as controlling playback of media content. The manual input processing engine **178** can cause one or more other engines to perform the function associated with the manual input **154**.

The sound processing engine **180** is configured to receive sound signals obtained from the sound detection device **162** and process the sound signals to identify different sources of the sounds received via the sound detection device **162**. In some embodiments, the sound processing engine **180** operates to filter voice input **156** from noises included in the detected sounds. Various noise cancellation technologies, such as active noise control or cancelling technologies or passive noise control or cancelling technologies, can be used for filter the voice input from ambient noise. By using one or more of these techniques, the sound processing engine **180** provides sound processing customized for use in a vehicle environment.

In some embodiments, a recording of sounds captured using the sound detection device **162** can be analyzed using speech recognition technology to identify words spoken. The words may be recognized as commands that alter the playback of media content and/or other functions or aspect of the PMSA system **110**. In some embodiments, the words and/or the recordings may also be analyzed using natural language processing and/or intent recognition technology to determine appropriate actions to take based on the spoken words. Additionally or alternatively, the sound processing engine **180** may determine various sound properties about the sounds proximate to the PMSA system **110** such as volume, dominant frequency or frequencies, etc. These sound properties may be used to make inferences about the environment proximate to the PMSA system **110**.

The voice interaction engine **182** operates to cooperate with the media delivery system **112** (e.g., a voice interaction server **204** thereof as illustrated in FIG. **3**) to identify a command (e.g., a user intent) that is conveyed by the voice input **156**. In some embodiments, the voice interaction engine **182** transmits the voice input **156** that is detected by the sound processing engine **180** to the media delivery system **112**. The media delivery system **112** operates to determine a command intended by the voice input **156**. In other embodiments, at least some of the determination process of the command can be performed locally by the voice interaction engine **182**.

In addition, some embodiments of the voice interaction engine **182** can operate to cooperate with the media delivery system **112** (e.g., the voice interaction server **204** thereof) to provide a voice assistant that performs various voice-based interactions with the user. Voice-based interactions include voice feedbacks, voice notifications, voice recommendations, and other voice-related interactions and services.

The appliance setting configuration engine **184** operates to send and receive signals from the media delivery system **112** to modify preset settings at the PMSA system **110**. Customized settings for controls of the PMSA **110** such as preset buttons **412** can be personalized by inputs received at the PMSA **110** or by modifying personalization settings through the media delivery system **112**.

FIG. **3** is a block diagram of an example embodiment of the media delivery system **112** of FIG. **1**. The media delivery system **112** includes a media content server **200**, a personal media streaming appliance (PMSA) server **202**, and a voice interaction server **204**.

The media delivery system **112** comprises one or more computing devices and provides media content to the PMSA system **110** and, in some embodiments, other media playback devices, as well. In addition, the media delivery system **112** interacts with the PMSA system **110** to provide the PMSA system **110** with various functionalities.

In at least some embodiments, the media content server **200**, the PMSA server **202**, and the voice interaction server **204** are provided by separate computing devices. In other embodiments, the media content server **200**, the PMSA server **202**, and the voice interaction server **204** are provided by the same computing device(s). Further, in some embodiments, at least one of the media content server **200**, the PMSA server **202**, and the voice interaction server **204** is provided by multiple computing devices. For example, the media content server **200**, the PMSA server **202**, and the voice interaction server **204** may be provided by multiple redundant servers located in multiple geographic locations.

Although FIG. **3** shows a single media content server **200**, a single PMSA server **202**, and a single voice interaction server **204**, some embodiments include multiple media servers, multiple PMSA servers, and/or multiple voice interaction servers. In these embodiments, each of the multiple media servers, multiple PMSA servers, and multiple voice interaction servers may be identical or similar to the media content server **200**, the PMSA server **202**, and the voice interaction server, respectively, as described herein, and may provide similar functionality with, for example, greater capacity and redundancy and/or services from multiple geographic locations. Alternatively, in these embodiments, some of the multiple media servers, the multiple PMSA servers, and/or the multiple voice interaction servers may perform specialized functions to provide specialized services. Various combinations thereof are possible as well.

The media content server **200** transmits stream media **210** (FIG. **2**) to media playback devices such as the PMSA system **110**. In some embodiments, the media content server **200** includes a media server application **212**, a processing device **214**, a memory device **216**, and a network access device **218**. The processing device **214** and the memory device **216** may be similar to the processing device **148** and the memory device **150**, respectively, which have each been previously described. Therefore, the description of the processing device **214** and the memory device **216** are omitted for brevity purposes.

The network access device **218** operates to communicate with other computing devices over one or more networks, such as the network **116**. Examples of the network access device include one or more wired network interfaces and wireless network interfaces. Examples of such wireless network interfaces of the network access device **218** include wireless wide area network (WWAN) interfaces (including cellular networks) and wireless local area network (WLANs) interfaces. In other examples, other types of wireless interfaces can be used for the network access device **218**.

In some embodiments, the media server application **212** is configured to stream media content, such as music or other audio, video, or other suitable forms of media content. The media server application **212** includes a media stream service **222**, a media application interface **224**, and a media data store **226**. The media stream service **222** operates to buffer media content, such as media content items **230**A, **230**B, and **230**N (collectively **230**), for streaming to one or more streams **232**A, **232**B, and **232**N (collectively **232**).

The media application interface **224** can receive requests or other communication from media playback devices or other systems, such as the PMSA system **110**, to retrieve media content items from the media content server **200**. For example, in FIG. **2**, the media application interface **224** receives communication from the PMSA system **110**, such as the caching management engine **174** thereof, to receive media content from the media content server **200**.

In some embodiments, the media data store **226** stores media content items **234**, media content metadata **236**, media contexts **238**, user accounts **240**, and taste profiles **242**. The media data store **226** may comprise one or more databases and file systems. Other embodiments are possible as well.

As discussed herein, the media content items **234** (including the media content items **230**) may be audio, video, or any other type of media content, which may be stored in any format for storing media content.

The media content metadata **236** provides various information associated with the media content items **234**. In some embodiments, the media content metadata **236** includes one or more of title, artist name, album name, length, genre, mood, era, etc.

The media content metadata **236** operates to provide various pieces of information associated with the media content items **234**. In some embodiments, the media content metadata **236** includes one or more of title, artist name, album name, length, genre, mood, era, etc.

Explicit metadata refers to factual or explicit information relating to music. Explicit metadata may include album and song titles, artist and composer names, other credits, album cover art, publisher name and product number, and other information. Explicit metadata is generally not derived from the music itself or from the reactions or opinions of listeners.

At least some of the metadata **236**, such as explicit metadata (names, credits, product numbers, etc.), for a large library of songs or tracks can be evaluated and provided by one or more third party service providers. Explicit metadata

may include numerical, text, pictorial, and other information. Explicit metadata may also be stored in an XML or other file. All or portions of the metadata may be stored in separate files associated with specific tracks. All or portions of the metadata, such as acoustic fingerprints and/or description vectors, may be stored in a searchable data structure, such as a k-D tree or other database format.

Referring still to FIG. **3**, each of the media contexts **238** is used to identify one or more media content items **234**. In some embodiments, the media contexts **238** are configured to group one or more media content items **234** and provide a particular context to the group of media content items **234**. Some examples of the media contexts **238** include albums, artists, playlists, and individual media content items. By way of example, where a media context **238** is an album, the media context **238** can represent that the media content items **234** identified by the media context **238** are associated with that album.

As described above, the media contexts **238** can include playlists **239**. The playlists **238** are used to identify one or more of the media content items **234**. In some embodiments, the playlists **238** identify a group of the media content items **234** in a particular order. In other embodiments, the playlists **238** merely identify a group of the media content items **234** without specifying a particular order. Some, but not necessarily all, of the media content items **234** included in a particular one of the playlists **238** are associated with a common characteristic such as a common genre, mood, or era.

In some embodiments, media content items in a playlist **238** can be played by selecting the playlist **238** via a media playback device, such as the PMSA system **110**. The media playback device then operates to communicate with the media delivery system **112** so that the media delivery system **112** retrieves the media content items identified by the playlist **238** and transmits data for the media content items to the media playback device for playback.

In some embodiments, the playlist **238** includes a playlist title and a list of content media item identifications. The playlist title is a title of the playlist, which can be received through inputs on a user computing device **102**. The list of content media item identifications includes one or more media content item identifications (IDs) that refer to respective media content items **234**.

The user accounts **240** are used to identify users of a media streaming service provided by the media delivery system **112**. In some embodiments, a user account **240** allows for authentication before providing access to the media delivery system **112**. In some embodiments, input for login can be received at different devices (e.g., the PMSA system **110** and the user computing device **102**) to access data associated with the user account in the media delivery system **112**. User authentication information, such as a username, an email account information, a password, and other credentials, can be used to access a user media streaming account **240**.

The user accounts **240** include data for devices associated with each user account. The user accounts **240** data store keeps track of the devices that can access the media content server **200** using a particular user account. In some embodiments, the user accounts **240** data store records order numbers for new devices that are ordered in order to associate the new devices with particular user accounts. Data stored in the user accounts **240** data store is further described with respect to FIG. **11**.

The taste profiles **242** contain records indicating media content tastes of users. A taste profile **242** can be associated with a user account and used to maintain an in-depth understanding of the music activity and preferences associated with a user account. Libraries and wrappers can be accessed to create taste profiles from a media library of the user account, social website activity and other specialized databases to mine music preferences.

In some embodiments, each taste profile **242** is a representation of media consumption activities. The media consumption activities can include a wide range of information such as artist plays, song plays, skips, dates of listen, songs per day, playlists, play counts, start/stop/skip data for portions of a song or album, contents of collections, rankings, preferences, or other mentions received via a client device, or other media plays, such as websites visited, book titles, movies watched, playing activity during a movie or other presentations, ratings, or terms corresponding to the media, such as "comedy", "sexy", etc. In addition, the taste profiles **242** can include other information. For example, the taste profiles **242** can include libraries and/or playlists of media content items associated with the user account.

The taste profiles **242** can be used for a number of purposes. One use of taste profiles is for creating personalized playlists (e.g., personal playlisting). An API call associated with personal playlisting can be used to return a playlist customized to a particular user account. For example, the media content items listed in the created playlist are constrained to the media content items in a taste profile associated with the particular user account.

Yet another use case is for personalized recommendation, where the contents of a taste profile are used to represent an individual's taste. This API call uses a taste profile as a seed for obtaining recommendations or playlists of similar artists.

Yet another example use case for taste profiles is referred to as user-to-user recommendation. This API call is used to discover users with similar tastes by comparing the similarity of taste profile item(s) associated with users.

A taste profile **242** can represent a single user account or multiple users' accounts. Conversely, a single user account can have multiple taste profiles **242**. For example, one taste profile can be generated in connection with media content play activity of a user account, whereas another separate taste profile can be generated for the same user account based on the selection of media content items and/or artists for a playlist.

Referring still to FIG. **3**, the PMSA server **202** operates to provide various functionalities to the PMSA system **110**. In some embodiments, the PMSA server **202** includes a personal media streaming appliance (PMSA) server application **250**, a processing device **252**, a memory device **254**, and a network access device **256**. The processing device **252**, the memory device **254**, and the network access device **256** may be similar to the processing device **214**, the memory device **216**, and the network access device **218**, respectively, which have each been previously described. In some embodiments, the PMSA server **202** is independent of the media delivery system **112**.

In some embodiments, the PMSA server application **250** operates to interact with the PMSA system **110** and enable the PMSA system **110** to perform various functions. Such functions can include receiving a manual input, displaying information, providing notifications, performing power management, providing location-based services, and authenticating logins for the PMSA system **110**. The PMSA server application **250** can interact with other servers, such as the media content server **200** and the voice interaction server **204**, to execute such functions.

The PMSA server application **250** includes a personal media streaming appliance configuration engine **258**. The PMSA configuration engine **258** operates to configure settings for a PMSA that are personalized to a user's account. For example, the PMSA configuration engine **258** assigns media contexts to preset settings of the PMSA. Functionality of the PMSA configuration engine **258** is further described with respect to FIGS. **10** and **14**.

The PMSA configuration engine **258** includes an appliance provisioning engine **126**. The appliance provisioning engine **126** operates to set up the preset settings of a PMSA before its first operation. The appliance provisioning engine **126** links a PMSA with a particular user account so that preset settings are customized to an account of that user. The appliance provisioning engine **126** is further described with respect to FIG. **14**. In some embodiments, the appliance provisioning engine **126** is independent of the PMSA server application **250**.

Referring still to FIG. **3**, the voice interaction server **204** operates to provide various voice-related functionalities to the PMSA system **110**. In some embodiments, the voice interaction server **204** includes a voice interaction server application **270**, a processing device **272**, a memory device **274**, and a network access device **276**. The processing device **272**, the memory device **274**, and the network access device **276** may be similar to the processing device **214**, the memory device **216**, and the network access device **218**, respectively, which have each been previously described.

In some embodiments, the voice interaction server application **270** operates to interact with the PMSA system **110** and enable the PMSA system **110** to perform various voice-related functions, such as voice feedback and voice notifications. In some embodiments, the voice interaction server application **270** is configured to receive data (e.g., speech-to-text (STT) data) representative of a voice input received via the PMSA system **110**. The voice interaction server application **270** can process the data to interpret a command (e.g., a request or instruction). In some embodiments, at least one of the media content server **200**, the PMSA server **202**, and the voice interaction server **204** may be used to perform one or more functions corresponding to the command.

FIG. **4** is a block diagram of an example embodiment of the user computing device **102**. The user computing device **102** includes a system memory **280**, a network access device **282**, a processing device **284**, a mass storage device **286**, and an input/output device **288**.

The network access device **282** operates to communicate with other computing devices over one or more networks, such as the network **116**. Examples of the network access device **282** include wired network interfaces and wireless network interfaces. Wireless network interfaces include infrared, BLUETOOTH® wireless technology, 802.11a/b/g/n/ac, cellular or other radio frequency interfaces wireless wide area network (WWAN) interfaces (including cellular networks), and wireless local area network (WLANs) interfaces.

The processing device **284** in some embodiments comprises one or more central processing units (CPU). In other embodiments, the processing device **284** additionally or alternatively includes one or more digital signal processors, field-programmable gate arrays, or other electronic circuits.

The mass storage device **286** includes at least an operating system **290**, a web browser application **292**, and a music playback application **294**.

The operating system **290** provides general functionality to the user computing device **102**. This is software that allows for basic tasks for be performed such as scheduling tasks, executing applications, and controlling peripherals.

The web browser application **292** operates to present a user interface on the user computing device **102** for interacting with the internet. The web browser application **292** may be employed to order a PMSA **110**.

The media playback application **294** receives inputs for commands to listen to media content, adjust settings for media content playback, and provide profile information for a user account. The media playback application **294** receives inputs from an input/output device **288** to select media content to play. The media playback application **294** can also record the media content that is consumed to send to the media delivery system **112** to build a taste profile **242** for the user account. The media playback application **294** includes user settings **296**, which can be adjusted to reflect the preferences of a user associated with the user account. Inputs are received at an input/out device **288** that instruct the media playback application **294** to modify settings for media playback. Updated settings are stored in the user settings **296** database.

Examples of user settings **296** include assigning media contexts to each of a plurality of presets associated with physical controls on a PMSA. In some examples, a playlist, artist, album, genre, or radio station can be assigned to a particular preset button on the PMSA. Other settings can include having a preference for shuffling music tracks as they are played in the context.

The input/output device **288** includes an appliance ID input device **122**. The appliance ID input device **122** can include a keyboard, a touch screen, a camera, a QR reader, or a barcode scanner. The appliance ID input device **122** is used to identify a PMSA **110** appliance identifier **128**. In some embodiments, the user U sets up the PMSA **110** for use with his or her media streaming account. Input is received at a user computing device **102** to log into a user account. The appliance ID input device **122** allows for receipt of the appliance identifier **128** into the user computing device **102**. The music playback application **294** then communicates the user account information and the appliance identifier **128** to the media delivery system **112**.

FIG. **5** illustrates a schematic block diagram of a vendor computing device **108**. The vendor computing device **108**A of FIG. **1** was shown in a warehouse W while another vendor computing device **108**B was shown in the context of a retailer R. The vendor computing device **108**A in the warehouse W communicates with a media delivery system **112** and an appliance distributor server **106** via network **116**. The vendor computing device **108**B at the retailer R communicates with the media delivery system **112**. The vendor computing device **108** includes a system memory **302**, a network access device **304**, a processing device **306**, a mass storage device **308**, and an input/out device **310**.

The system memory **302**, network access device **304**, and processing device **306** are similar to the system memory **280**, network access device **282**, and processing device **284** described above in FIG. **4**.

The mass storage device **308** includes an operating system **314** and device identification software application **316**. The operating system **314** is similar to the operating system **290** of FIG. **4**. The device identification software application **316** receives identifying information for a device or appliance from the appliance ID input device **122**. The device identification software application operates to communicate the appliance ID along with an order identifier or account identifier to the media delivery system **112**. The media

delivery system **112** then pairs each appliance or device ID with a user's media streaming account.

The input/output device **310** includes an appliance ID input device **122**. The appliance ID input device **122** is used to input an appliance identifier **128** to the vendor computing device **108**. Examples of appliance identifiers **128** are shown in FIGS. **7**A and **7**B. Appliance identifiers **128** can include barcodes, QR codes, serial numbers, bokodes, and RFID tags. The appliance ID input device **122** is configured to scan, read, or receive other input of an appliance identifier **128**. In some embodiments, the input/output device **310** includes more than one appliance ID input device **122**.

In the context of a warehouse W, the vendor computing device **108**A is used to receive an appliance identifier **128** associated with a PMSA **110** using the appliance ID input device **122**. The appliance identifier **128** identifies the PMSA **110** and that information is communicated to the appliance distributor server **106**. The appliance distributor server **106** then communicates that information to the media delivery system **112**. The media delivery system **112** receives the appliance identifier **128** along with a confirmation that an order has been fulfilled. The appliance identifier **128** can be associated with a user account by the media delivery system **112**.

In the context of a retailer R, a vendor computing device **108**B is usable to receive an appliance identifier **128** for a PMSA **110** that is being sold in a retail store. The vendor computing device **108**B receives the appliance identifier **128** through the appliance ID input device **122**. An employee of the retailer R communicates with the user U to obtain their account information. Login information is received through inputs at the vendor computing device **108**B such as a keyboard. The appliance identifier **128** information and the user's account information are both communicated through the network **116** to the media delivery system **112**, where the device ID and user's account ID are associated and stored in the media delivery system **112** as described in further detail with respect to FIGS. **8** and **11**.

FIG. **6** schematically illustrates an example embodiment of the PMSA system **110** of FIG. **1**. In this example, the PMSA system **110** includes a personal media streaming appliance (PMSA) **400** and a docking device **402**.

As described herein, the PMSA system **110** is sized to be relatively small so that the PMSA system **110** can be easily mounted to a structure (e.g., a dashboard or head unit) of the vehicle V. By way of example, the PMSA system **110** is configured to be smaller than a typical mobile computing device, such as a smartphone. Further, the PMSA **400** provides a simplified user interface for controlling playback of media content. For example, the PMSA **400** has a limited set of physical control elements, such as a single rotary knob and one or more physical buttons.

The PMSA **400** is configured to include at least some of the devices of the PMSA system **110** as illustrated with reference to FIG. **2**. In some embodiments, the PMSA **400** includes all of the devices of the PMSA system **110** as illustrated in FIG. **2**.

As illustrated also in FIG. **2**, some embodiments of the PMSA **400** include the user input device **130** that includes the manual input device **160** and the sound detection device **162**. Some embodiments of the manual input device **160** include a control knob **410** and one or more physical buttons **412**.

In some embodiments, the control knob **410** is configured to be maneuverable in multiple ways. For example, the control knob **410** provides a plurality of regions on a knob face **414** that are independently depressible upon receiving a pressing action against the knob face **414**. In the illustrated example, the control knob **410** has five regions **416** (e.g., up, down, left, right, and middle) that are separately depressible. At least some of the regions **416** are configured to receive inputs of different commands (e.g., requests or instructions).

In other embodiments, the control knob **410** is configured to be manipulated in different ways, such as tilting in multiple directions or sliding in multiple directions.

In addition, the control knob **410** is configured to be rotatable. For example, the control knob **410** can be rotated with respect to a body **420** of the PMSA **400**. The control knob **410** can be rotatable in both directions **422** (e.g., clockwise and counterclockwise). In other embodiments, the control knob **410** is configured to rotate in only one direction.

The control knob **410** is used to receive inputs for controlling playback of media content. In addition or alternatively, the control knob **410** can be used to receive inputs for other purposes or functions.

The physical buttons **412** are configured to be depressed upon receiving a pressing action against the physical buttons **412**. In the illustrated example, the PMSA **400** has four physical buttons **412**A-**412**D. In some embodiments, each of the physical buttons **412** is configured to receive a single command. In other embodiments, at least one of the physical buttons **412** is configured to receive multiple commands.

In some embodiments, the physical buttons **412** are used as buttons that are preset to be associated with particular media content context, thereby facilitating playback of such media content. In these embodiments, the physical buttons **412** are also referred to as preset buttons **412**.

In addition, the PMSA **400** also includes the display screen **132**. In some embodiments, the display screen **132** is arranged at the knob face **414** of the control knob **410**. As described herein, in some embodiments, the display screen **132** does not include a touch sensitive display screen, and is configured as a display device only. In other embodiments, however, the display screen **132** can be configured to be touch sensitive and receive an input through the display screen **132** as well.

Referring still to FIG. **6**, the docking device **402** is configured to mount the PMSA **400** to a structure of the vehicle V. The docking device **402** is configured to removably mount the PMSA **400** thereto. The docking device **402** is further configured to attach to a structure of the vehicle V (FIG. **13**) so that the PMSA **400** is positioned at the structure of the vehicle V.

In some embodiments, an interface between the PMSA **400** and the docking device **402** is configured to prevent the PMSA **400** from rotating relative to the docking device **402** when the control knob **410** is manipulated. For example, the docking device **402** has a portion (e.g., a front portion of the docking device **402**) configured to interlock a corresponding portion of the PMSA **400** (e.g., a rear portion of the PMSA **400**) when the PMSA **400** is mounted to the docking device **402** such that the portion of the docking device **402** and the corresponding portion of the PMSA **400** form the interface therebetween.

In addition or alternatively, the PMSA **400** and the docking device **402** include magnetic materials at the interface therebetween so that the PMSA **400** and the docking device **402** are magnetically coupled to each other.

In some embodiments, the docking device **402** includes one or more electrical contacts **430** that are electrically connected to corresponding electrical contacts (not shown in FIG. **6**) of the PMSA **400** when the PMSA **400** is mounted to the docking device **402**. Such electrical connection

between the PMSA **400** and the docking device **402** is provided for various functions.

First, as described herein, the PMSA **400** does not include a battery sufficient for a prolonged use without an external power supply. In some embodiments, the PMSA **400** is primarily powered by a vehicle power supply **440**. In some embodiments, the docking device **402** has a power receiving line **444** for connection to the vehicle power supply **440**. For example, the power receiving line **444** extends from the docking device **402** and has a power connector **446** at a free end that is configured to mate with a vehicle power outlet **442** (e.g., a 12V auxiliary power outlet) of the vehicle power supply **440**. As such, the docking device **402** receives electric power from the vehicle power supply **440** via the power receiving line **444**, and the electrical connection between the PMSA **400** and the docking device **402** is configured to deliver electric power from the docking device **402** to the PMSA **400**.

Second, as described herein, the PMSA **400** does not have a speaker and is designed to transmit media content signals to the vehicle media playback system **114** so that the media content is played through the vehicle media playback system **114**. In some embodiments, the docking device **402** includes a media content output line **450** (also referred to herein as a media content output cable) (e.g., an auxiliary (AUX) output) configured to connect with the vehicle media playback input connector **456** (e.g., an auxiliary (AUX) port) of the vehicle media playback system **114**. The docking device **402** is configured to receive media content signals from the PMSA **400** via the electrical connection between the PMSA **400** and the docking device **402**, and transmit the signals to the vehicle media playback system **114** via the media content output line **450**. In the illustrated embodiment, the power receiving line **444** and the media content output line **450** are combined to be a single line extending from the docking device **402** until the power connector **446**, and the media content output line **450** further extends (or branches out) from the power connector **446** and terminates at a media output connector **452**. The media output connector **452** is configured to connect to the vehicle media playback input connector **456** of the vehicle media playback system **114**. In other embodiments, the media content output line **450** and the power receiving line **444** extend separately from the docking device **402**.

In other embodiments, one or more of the power receiving line **444** and the media content output line **450** are directly connected to, and extend from, the PMSA **400** so that electric power is directly supplied to the PMSA **400** without the docking device **402** involved, and that the media content is directly transmitted to the vehicle media playback system **114** without passing through the docking device **402**.

Third, the electrical connection between the PMSA **400** and the docking device **402** can be used to detect connection between the PMSA **400** and the docking device **402**.

The PMSA system **110** can be provided to a user U in at least three different ways. In the first method, input is received at a user computing device **102** such as a laptop or a mobile device to log into a user media streaming account **240**. Input is received at the user computing device **102** to place an order for a PMSA system **110** through the media streaming account. The order is then linked to the user's account at the time of ordering. The appliance **110** is shipped directly from the manufacturer or distributor to an address provided with the order. During the shipping process, the appliance is paired to the user account. The PMSA **110** is programmed to receive instructions from the media delivery system **112** immediately upon powering on. The PMSA **110** can immediately play personalized media content upon receiving input at a physical control such as the physical buttons **412**.

In another method, the PMSA system **110** is shipped to a retailer, such as the retailer R of FIG. **1**. The retailer R offers the PMSA system **110** for sale to customers that may or may not already have a media streaming account. At the retailer, an employee assists with setting up the PMSA **110** for use with a media streaming account.

For new users, the employee assists by providing inputs to a vendor computing device **108**B to set up a new account. Commands are received at the vendor computing device **108**B and communicated to the media delivery system **112** to link the account with the PMSA **110**. In such instances, the PMSA will automatically update with settings that are configured to play popular music or otherwise provide media content to be available for playback upon first use of the PMSA **110**.

For existing users of a media streaming account, the past media consumption activity associated with the media streaming account is evaluated and used. Media contexts are selected at the media delivery system **112** that will be associated with the physical controls of the PMSA **110** so that upon first use of the device, the PMSA **110** will play media content selected specifically for the user account.

In yet another method, the PMSA system **110** is either shipped to the user U or the user U purchases the PMSA system **110** at a retailer. However, the user's media streaming account is not linked to the PMSA in advance. In such instances, input is received at a user computing device **102** to log into the user's media streaming account. Input is received at the user computing device **102** identifying the PMSA **110**. For example, an input of a QR code can be received. The media delivery system **112** receives the appliance identifying information and associates the PMSA **110** with the user account. Then, immediately after the PMSA **110** is powered on, media content selected for the media streaming account is received from the media delivery system **112** and played on the PMSA **110**.

Regardless of the method by which the user U receives the PMSA system **110**, the PMSA will be provided with an appliance identifier **128** of some sort. The appliance identifier **128** could be placed on packaging of the PMSA **110** or be directly placed on the appliance itself.

FIGS. **7**A & FIG. **7**B show two examples of placement of the appliance identifier **128**. In the example of FIG. **7**A, the appliance identifier **128** is a barcode placed on the outside of a packaging P which encloses the personal media streaming appliance PMSA **110**. The appliance identifier barcode **128** can be scanned by an employee of a warehouse. The warehouse vendor computing device **108**B submits an appliance ID to the media delivery system **112** where the device ID is paired with an account ID. This can be performed using a computing device such as the vendor computing device **108** of FIG. **1**.

In other examples, a retailer R may scan the appliance identifier **128** at the time of a purchase. The retailer R obtains user account information, scans the appliance identifier **128** with the appliance ID input device **122** and submits both the user account number and appliance ID number through the network **116** to the media delivery system **112** where it is recorded. In yet another embodiment, a user may set-up the PMSA **110** for use with their media streaming account themselves. The user computing device **102** receives the appliance identifier **128** through a camera or input on a keyboard.

FIG. 7B shows an embodiment in which the appliance identifier **128** is placed directly on the PMSA **110**. In this example, the appliance identifier **128** is a QR code affixed to a back surface of the PMSA **110**. The appliance identifier **128** can be captured by a computing device in a warehouse, at a retailer, or with a user computing device **102** as described above for FIG. **7**A.

FIG. **8** illustrates a method flowchart for a method **500** of provisioning a PMSA for use with a user media streaming account. The method **500** involves a user U placing an order for a PMSA **110** to be delivered to the user for use in the user's vehicle V. The user has an existing media streaming account or signs up for a media streaming account at the time that the user places the order for the PMSA **110**. FIG. **8** shows the status **502** of the ordering and shipping process. The system involved in completing the steps of the method **500** include the user computing device **102**, the media delivery system **112**, the appliance distributor server **106**, the vendor computing device **108**, and the personal media streaming appliance **110**. The status **502** indicates which steps of the method **500** are performed during "placing order," "preparing order," "shipping order," and "order received."

The method **700** begins when login information is received at the user computing device **102** at operation **504**. The login information is received at the user computing device **102** through an input/output device **288**. Examples of such input/output devices **288** include a keyboard, a mouse, and a touch screen. The login information includes at least a user account ID, such as the user account ID **930** described in FIG. **15**.

At operation **506**, input is received at the user computing device **102** for an appliance to be ordered. The input places an order for a PMSA **110** that is associated with a user media streaming account.

At operation **508**, the user computing device **102** submits an order for a PMSA. The media delivery system **112** receives the order at operation **509**. The order is assigned an order ID at the time of submission. The order ID and user account ID are included in the order.

At operation **510**, the order ID is linked to the user's account ID and recorded at the media delivery system **112**. In some embodiments, the linked order ID and account ID are stored in a table such as one of the tables in the data structure **700** of FIG. **11**. The order information is then forwarded to the appliance distributor server **106**.

At operation **512**, the order is received at the appliance distributor server **106**. The order for the PMSA **110** is prepared at a manufacturer or distributor warehouse. When a PMSA is ready to be shipped, a device ID for the PMSA **110** is recorded using a vendor computing device **108** at operation **514**. The device ID is then communicated to the appliance distributor server **106**.

At operation **516**, the device ID is forwarded from the appliance distributor server **106** along with the order ID to the media delivery system **112**.

At operation **517**, the media delivery system **112** receives the device ID with the order ID. The device ID and order ID can be included in a confirmation message. In some embodiments, the confirmation message is received from the appliance distributor server **106**. The device ID and order ID can be received at the media delivery system **112** from other sources such a carrier computing device. The media delivery system **112** links the device ID with the user account ID based on the common order ID at operation **518**. The storage of the device ID is described further with respect to FIG. **11**.

While the order for the PMSA **110** is shipping, the media delivery system **112** operates to set up the functionality of the PMSA **110** so that media content played at the PMSA **110** will be personalized to the user account when the PMSA **110** is first operated. At operation **520**, the media delivery system **112** accesses the taste profile **242** of the user account associated with the user account ID. The taste profile **242** indicates which media contexts are most often utilized by the media streaming account. A media context can be one of an artist, an album, a playlist, and a radio station. The media delivery system **112** analyzes the taste profile **242** to identify media contexts.

At operation **522**, the top contexts selected from the taste profile **242** are assigned to preset settings of the PMSA. Each preset setting of the PMSA is associated with a particular input that can be received from the PMSA. For example, an input may be pressing a preset button or turning the knob. A more detailed example of methods of assigning contexts to preset settings is described in FIG. **10**.

In some embodiments, a confirmation message is received at the media delivery system **112** when the PMSA **110** is delivered at the address specified in the order. The confirmation message can be received from any source having information regarding the delivery status of the PMSA **110**. For example, a carrier computing device or a user computing device **102** could be the source of the confirmation message.

At operation **524**, input is received at the personal media streaming appliance **110** from a physical control. The PMSA **110** may be installed in a vehicle V. The physical control can be, for example, a preset button **412**.

At operation **526**, a preset signal **912** is submitted from the personal media streaming appliance **110** to the media delivery media system **112**. The preset signal **912** is further described in FIG. **15**.

At operation **528**, the preset signal is received at the media delivery system **112**. The media delivery system **112** processes the preset signal to determine which media context is associated with the preset signal **912**.

At operation **530**, the context associated with the input is identified at the media delivery system **112**. In embodiments where the PMSA **110** is configured to play audio content, the context can be a music playlist, a podcast, an audiobook, an artist, an album, or a radio station.

At operation **532**, the media delivery system **112** sends the media content associated with the selected context to the personal media streaming appliance **110**.

At operation **534**, the PMSA **110** receives the selected media content from the media delivery system **112**.

At operation **536**, the media delivery system **112** retrieves the media content associated with the context of the selected preset.

At operation **536**, the media content from the selected context is played on the PMSA **110**.

FIG. **9** illustrates a method flowchart for a method **540** of provisioning a PMSA for use with a user media streaming account. The method **540** involves a user U purchasing a PMSA **110** from a retailer rather than ordering through the media delivery system **112**. The user has an existing media streaming account or signs up for a media streaming account at the time that the user purchases the PMSA **110**. The system involved in completing the steps of the method **540** include an appliance identification device **102**, **108**, the media delivery system **112**, and the personal media streaming appliance **110**. The appliance identification device can be a user computing device **102** or a vendor computing device **108**A, **108**B, as shown in FIG. **1**.

The method **540** begins when login information is received at the appliance identification device **102**, **108** at operation **546**. The user U may input the login information into the appliance identification device **102**, **108** or an employee working for a retailer could input the login information for the user. Login information is received through an input/output device **288**. Examples of such devices include a keyboard, a mouse, and a touch screen. The login information includes at least a user account ID, such as the user account ID **930** described in FIG. **15**. In instances where the user does not already have a media streaming account, the user can set up a new account or an employee could assist the user with setting up an account.

At operation **547**, a user account ID is submitted to the media delivery system **112** through the network **116**. The user account ID is associated with a user media streaming account.

At operation **548**, the media delivery system **112** receives the user account ID and accesses the user account. In some instances, a communication may be returned to the appliance identification device **102**, **108** to confirm successful login and provide a prompt to add a new device to the user account.

At operation **550**, input of a device ID is received at the appliance identification device **102**, **108** and communicated to the media delivery system **112**. The device ID is taken from a PMSA that is to be associated with a particular user's media streaming account. In some cases, the appliance identification device **102**, **108** can include a bar code scanner to read a barcode with a unique identifier for the PMSA **110**. In other instances, a camera could be used to capture a QR code or other unique identifying symbol on the PMSA **110** or its packaging. Alternatively or in addition to the scanning methods, the appliance identification device **102**, **108** could receive characters representing the device ID through a keyboard, touchscreen, or other input device.

At operation **552**, the media delivery system **112** receives the device ID. In some embodiments, the device ID is received from the appliance identification device **102**, **108**. The media delivery system **112** links the device ID with the user account ID. The storage of the device ID is described further with respect to FIG. **11**.

Similar to the method **500** of FIG. **8**, the media delivery system **112** operates to set up the functionality of the PMSA so that media content played at the PMSA will be personalized to the user account upon first operation of the PMSA **110**. However, the set up steps may occur during a much shorter period of time because the PMSA **110** is not being shipped.

At operation **556**, the media contexts are assigned to preset buttons **412** of the PMSA. Each preset setting of the PMSA is associated with a particular preset button. A more detailed example of methods of assigning contexts to preset buttons is described in FIG. **10**.

At operation **558** an input of a preset button is received at the PMSA **110**. A preset signal is submitted at operation **559**. The preset signal is further described in FIG. **15**.

At operation **562**, the media delivery system **112** receives the preset signal. The preset signal includes at least a device ID and preset button ID. At operation **560**, the information from the preset signal is used to identify a media context assigned to the preset button.

At operation **561**, the media content associated with the media context is retrieved by the media delivery system **112** and communicated to the PMSA **110**. The media content from the context assigned to the preset button is then played on the PMSA **110** at operation **562**.

FIG. **10** is a flow chart of an example method **600** of assigning media contexts to preset buttons on a PMSA associated with a user media streaming account.

At operation **602**, the media delivery system **112** determines whether the user account is new or existing. New accounts may be made just before operating at PMSA **110**, so there is no media playback history associated with the account. Existing user accounts typically have information reflecting past media consumption activity.

For existing user accounts, the method proceeds to operation **606** where a taste profile **242** is accessed at the media delivery system **112**. The taste profiles may be accessed from the taste profile **242** data store within the media data store **226** of the media server application **212** as shown in FIG. **3**. A taste profile **242** reflects media consumption preferences based on the media consumption history of an account. For example, a history of listening to particular types of music could indicate a preference for a particular musical genre or artist.

For new user accounts, the method proceeds to operation **610**, where user profile information is accessed. When setting up a new media streaming account, a prompt is presented to enter at least a minimal amount of personal information for a user associated with the account. For example, such personal information could include one or more of a birth date, a gender, and a location. In some embodiments, a prompt is presented to provide information about media consumption preferences through the use of a survey. For example, a prompt might request selection of favorite music genres from a list. In another embodiment, a prompt is presented to log into a social media account to allow the media streaming account to access information from the social media account. Information from the social media account could be used to determine media consumption preferences.

At operation **612**, the new profile information is compared to profile information from existing accounts of the media streaming service. The media consumption activity of user accounts having similar profile information is analyzed to determine which media contexts are preferred.

At operation **614**, the media consumption activity of similar user accounts is utilized to build a taste profile **242** for the new user account.

Regardless of whether the user account is new or existing, the method then proceeds to operation **618**. The top "n" media contexts from the taste profile are selected. "n" is a number that matches the number of preset buttons on a PMSA **110** that is associated with the user's media streaming account. For example, if the PMSA **110** has four preset buttons **412** as shown in FIG. **6**, four media contexts would be selected. The "top" media contexts can be selected based on media contexts that are used the most often by the user. Alternative methods of ranking are possible such as the most recently played media contexts, or contexts that are most frequently saved to the user account.

At operation **620**, the media contexts are assigned to the preset buttons **412** on the PMSA **110**. The media context assignments are stored at the media delivery system **112** in the PMSA preset data **259** store.

FIG. **11** illustrates an example data structure **700** that may appear in a database of the media delivery system **112** such as the user accounts **240** database within the media server application **212** or the PMSA preset data **259** within the personal media streaming appliance server application **250** as shown in FIG. **3**. In this embodiment, the data in the media delivery system **112** may be represented with a plurality of tables which identifies a rational nature of the

database according to the embodiment of the present disclosure. However, in alternative embodiments, the data stored in the media delivery system **112** may also be implemented using other database models.

In the illustrated example, the data structure **700** includes a user account table **702**, a media context table **704**, and a media content item table **706**. For each user account, the data structure **700** includes an order data table **708**, a device data table **710**, a device setting table **712**, a preset table **714**, a playback state table **716**, and a taste profile table **718**.

The user account table **702** can be configured to include data usable to identify users associated with user accounts of the media delivery system **112** (e.g., a media content provider or a media streaming service). In some embodiments, the user account table **702** can be used to store and identify the user accounts **240** as described with reference to FIG. **3**. In some embodiments, the user account table **702** can reference one or more other tables, and/or be referenced by one or more other tables. Some embodiments of the user account table **702** can contain a field for user account identifiers (IDs) **720**, a field for user identifiers (IDs) **722**, a field for passwords **724**, and a field for subscription types **726**.

The user account ID field identifies a plurality of user account IDs **720** associated with the user accounts of the media delivery system **112**.

The user ID field identifies user IDs **722** associated with the user accounts.

The password field identifies passwords **724** associated with the user accounts.

The subscription type field identifies subscription types **726** associated with the user accounts. Examples of the subscription types **726** include a free subscription and a fee-based subscription with a single tier or with multiple tiers. Such a fee-based subscription can provide services that the free subscription does not provide.

In other embodiments, the user account table **702** can contain additional fields, such as biographical information (e.g., address, contact information, age, gender, birth date/year, family, relationships, work, education, etc.). It is noted that, where user data is used, it can be handled according to a defined privacy policy. User data can be handled in an anonymized matter.

Referring still to FIG. **11**, each user account that can be identified in the user account table **702** is associated with, and identifies, a set of data for providing various services from the media delivery system **112**. In some embodiments, such a set of data includes an order data table **708**, device data table **710**, a device setting table **712**, a preset table **714**, a playback state table **716**, and a taste profile table **718**. In the illustrated example, the tables **708**, **710**, **712**, **714**, **716**, and **718** are primarily described to be associated with a single user account (e.g., User Account ID: ABC). However, it is understood that, in other embodiments, the tables **708**, **710**, **712**, **714**, **716**, and **718** can be structured to be associated with a plurality of user accounts

The order data table **708** identifies one or more orders associated with a particular user account. (e.g., User Account ID: ABC in FIG. **9**). The orders are generally for PMSA devices. In some embodiments, the order data table **708** can be referenced by the user account table **702**. Other tables can reference the order data table **708**. The order data table **708** can also reference one or more other tables. The order data table **708** can contain a field for order identifiers (IDs) **730**, a field for device names **732**, and a field for order status **734**. The order IDs **730** can include an order confirmation number or other unique identifiers. The device names **732** correspond to devices involved in the order. The status **734** indicates the latest event that has occurred in the order fulfillment process. For example, the order status **734** can indicate whether the device has been ordered, has shipped, or has been delivered.

The device data table **710** identifies one or more devices associated with a particular user account. In some embodiments, the device data table **710** can be referenced by the user account table **702**. Other tables can reference the device data table **710**. The device data table **710** can also reference one or more other tables. The device data table **710** can contain a field for device identifiers (IDs) **740**, a field for device names **742**, and a field for device status **744**. The device ID field includes one or more device IDs **740** of one or more media playback devices that are associated with the particular user account.

In some embodiments, a plurality of media playback devices, such as the PMSA **110**, the computing device, and other computing devices, can be respectively used to access media content service from the media delivery system **112** which is associated with a single user account. For example, different media playback devices, such as the PMSA **110** and the user computing device **102**, can receive inputs of login information. The media content service associated with the user account can be provided to one or more of the media playback devices that have received login information associated with the same user account.

The device name field includes one or more device names **742** associated with the device IDs **740**. The device status field identifies a device status **744** for each of the media playback devices identified in the device data table **710**. In some embodiments, the device status can be either active or inactive. When the device status of a media playback device is active, the media playback device is in operation and accessible by the media delivery system **112** via the network **116**. When the device status of a media playback device is inactive, the media playback device is not in operation and thus inaccessible by the media delivery system **112** via the network **116**.

The device setting table **712** includes information about settings that are configurable in one or more particular media playback devices. In some embodiments, the device setting table **712** can be referenced by the device data table **710**. Other tables can reference the device setting table **712**. The device setting table **712** can reference one or more other tables. In the illustrated example, the device setting table **712** indicates that the media playback device identified by the device ID ("ABCsge") has various settings, such as presets, playback settings, sound quality, notification, advertisement, and other user-configurable settings.

The preset table **714** includes information about presets associated with one or more particular media playback devices. In some embodiments, the preset table **714** can be referenced by the device setting table **712**. Other tables can also reference the preset table **714**. The preset table **714** can reference one or more other tables. In the illustrated example, the preset table **714** contains information about the presets provided in the media playback device identified by the device ID ("ABCsge").

Some embodiments of the preset table **714** include a field for preset identifiers (IDs) **750** and a field for media context identifiers (IDs) **752**. The preset ID field contains one or more preset identifiers (IDs) **750** that identify presets provided in the particular media playback device. The context ID field contains one or more media context identifiers **752** associated with the preset identifiers **750**, respectively. The media context identifiers **752** are used to identify media

contexts **238**, as described herein. In some embodiments, a media context identifier is configured as a Uniform Resource Identifier (URI).

In the illustrated examples of FIG. **6**, the PMSA **110** includes the preset buttons **412**, and the preset buttons **412** can be identified by the preset identifiers **750**. As the preset identifiers **750** are associated with the media context identifiers **752** that identify media contexts, the preset buttons **412** in the PMSA **110** can be used to retrieve the media contexts identified by the media context identifiers **752**.

The playback state table **716** includes information about playback of one or more media contexts **238**. In some embodiments, where a plurality of media playback devices may be used to play media content associated with a particular user account, only one of the plurality of media playback devices can be used to play the media content while the other media playback devices may not be used to play the same media content simultaneously. In these embodiments, the playback state table **716** is configured to indicate playback information of the media content that is in common among the plurality of media playback devices associated with the particular user account. In other embodiments, the playback state table **716** is configured to indicate playback information for each of the media playback devices associated with the particular user account, where the media playback devices may be used independently to play media content in different manners.

In some embodiments, the playback state table **716** contains a current context **760**, a current media content item (i.e., a current track) **762**, a playback mode **764**, a playback speed **766**, and a next media content item (i.e., a next track) **768**. In addition or alternatively, the playback state table **716** can contain other playback-related information. In some embodiments, the playback state table **716** can reference one or more other tables, and/or be referenced by one or more other tables. The current context **760** indicates a media context **238** that is being currently played in a media playback device. The current media content item **762** indicates a media content item that is being currently played from the current context **760**. The playback mode **764** indicates a playback mode that is currently selected. Examples of the playback mode include a normal playback mode, a repeat playback mode, and a shuffle playback mode. The playback speed **766** indicates a playback speed that is currently selected. Examples of the playback speed include a normal playback speed, one or more faster playback speeds, and one or more slower playback speeds. The next media content item **768** indicates a media content item that is in queue and will be subsequently played after the current media content item **762**.

Referring still to FIG. **11**, the taste profile table **718** is configured to identify a taste profile **242** (FIG. **3**) associated with the particular user account. In some embodiments, the taste profile table **718** can be referenced by the user account table **702**. Other tables can reference the taste profile table **718**. The taste profile table **718** can also reference one or more other tables.

With reference still to FIG. **11**, the media context table **704** is configured to identify one or more media contexts **238** as described with reference to FIG. **3**. As illustrated, some embodiments of the media context table **704** can respectively identify a media context **238** by a media context identifier **752**. The media context table **704** contains various pieces of information about a corresponding media context **238**. Examples of such information include a media context title **780**, a media context type **782**, a media context artist **784**, a media context genre **786**, and a list of media content items **788** associated with the media context **238**. Other information can also be included in the media context table **704**.

The media context title **780** indicates a title of the media context **238**. The media context type **782** indicates a type of the media context **238**, such as a playlist, an album, an artist, and a track. The media context artist **784** indicates one or more artists associated with the media context **238**. The media context genre **786** indicates a genre associated with the media context **238**. The list of media content items **788** indicates one or more media content items (i.e., tracks) associated with the media context **238**. Each of the media content items can be identified by a track identifier **790**. In some embodiments, one or more of the media content items **234**, as described with reference to FIG. **3**, are identified by the list of media content items **788**.

The media content item table **706** is configured to identify one or more media content items (i.e., tracks) **792** by the track identifiers **790**. In some embodiments, a track identifier is configured as a Uniform Resource Identifier (URI). In some embodiments, one or more of the media content items **792** are selected from the media content items **234** as described with reference to FIG. **3**. The media content item table **706** can further include various attributes about the media content item **792**, such as a media content item title, artist identification (e.g., individual artist name or group name, or multiple artist names or group names), genre, era, and other attributes of the media content item.

FIG. **12** illustrates an example environment **800** in which a PMSA **110** system is operated in a vehicle V to stream media content for playback. The vehicle V includes a dashboard **802** or a head unit **804**. The environment **800** includes one or more media playback devices configured to play media content, such as a personal media streaming appliance (PMSA) system **110** and a vehicle media playback system **114**. The environment **800** further includes a data communication network **116**.

In the example of FIG. **12**, a user has received a new PMSA **110** and has mounted the portable device inside of the vehicle V. In this example, the PMSA **110** is mounted to the head unit **804** of the vehicle V, but could also be mounted to the dashboard **802**. In other embodiments, the PMSA system **110** can be configured to be built in a structure of the vehicle V.

The PMSA **110** is configured to receive media content personalized to the user account as soon as the PMSA **110** is powered on. In some embodiments, input is received from actuation of a preset button **412** on the PMSA **110**. Receiving input from a button triggers the PMSA **110** to retrieve media content and/or setting information. This process is described further with respect to FIG. **14**.

The vehicle media playback system **114** operates to receive media content from the PMSA system **110** and generates a media output **124** to play the media content in the vehicle V. An example of the vehicle media playback system **114** is illustrated and described in further detail herein, such as with reference to FIG. **13**.

FIG. **13** is a block diagram of an example embodiment of the vehicle media playback system **114**. In this example, the vehicle media playback system **114** includes a vehicle head unit **804**, an amplifier **806**, and a speaker **808**.

The vehicle head unit **804** is configured to receive input and generate media content from various sources. In this example, the vehicle head unit **804** includes a receiver **810**, a wireless communication device **812**, a wired input device

814, a processing device 816, a memory device 818, an input assembly 820, a display device 822, and a stored media interface assembly 824.

The receiver 810 operates to receive media content signals from various external sources. The received signals can then be used to generate media output by the vehicle media playback system 114. Some embodiments of the receiver 810 include one or more tuners for receiving radio signals such as FM or AM radio signals. Other embodiments of the receiver 810 include a receiver for receiving satellite radio signals and/or a receiver for receiving internet radio signals.

The wireless communication device 812 operates to communicate with other devices using wireless data signals. The wireless communication device 812 can include one or more of a Bluetooth transceiver and a Wi-Fi transceiver. The wireless data signal may comprise a media content signal such as an audio or video signal. In some embodiments, the wireless communication device 812 is used to enable the vehicle media playback system 114 to wirelessly communicate with the PMSA system 110 and receive the media content signal 164 (FIG. 2) from the PMSA system 110 via an in-vehicle wireless network.

The wired input device 814 provides an interface configured to receive a cable for providing media content and/or commands. The wired input device 814 includes an input connector 456 configured to receive a plug extending from a media playback device for transmitting a signal for media content. In some embodiments, the wired input device 814 can include an auxiliary input jack (AUX) for receiving a plug from a media playback device that transmits analog audio signals. The wired input device 814 can also include different or multiple input jacks for receiving plugs from media playback devices that transmit other types of analog or digital signals (e.g., USB, HDMI, Composite Video, YPbPr, DVI). In some embodiments, the wired input device 814 is also used to receive instructions from other devices.

In some embodiments, the wired input device 814 provides the input connector 456 (e.g., an AUX port) for receiving a connector 452 extending from the PMSA system 110, as illustrated in FIG. 6. The media content signal 164 is then transmitted from the PMSA system 110 to the vehicle media playback system 114 via the cable 450, the connector 452, and the input connector 456.

The processing device 816 operates to control various devices, components, and elements of the vehicle media playback system 114. The processing device 816 can be configured similar to the processing device 148 (FIG. 2) and, therefore, the description of the processing device 816 is omitted for brevity purposes.

In some embodiments, the processing device 816 operates to process the media content signal 164 received from the PMSA system 110 and convert the signal 164 to a format readable by the vehicle media playback system 114 for playback.

The memory device 818 is configured to store data and instructions that are usable to control various devices, components, and elements of the vehicle media playback system 114. The memory device 818 can be configured similar to the memory device 150 (FIG. 2) and, therefore, the description of the memory device 818 is omitted for brevity purposes.

The user input assembly 820 includes one or more input devices for receiving user input from users for controlling the vehicle media playback system 114. In some embodiments, the input assembly 820 includes multiple knobs, buttons, and other types of input controls for adjusting volume, selecting sources and content, and adjusting various output parameters. In some embodiments, the various input devices are disposed on or near a front surface of the vehicle head unit 804. The various input devices can also be disposed on the steering wheel of the vehicle or elsewhere. Additionally or alternatively, the input assembly 820 can include one or more touch sensitive surfaces, which can be incorporated in the display device 822.

The display device 822 displays information. In some embodiments, the display device 822 includes a liquid crystal display (LCD) panel for displaying textual information about content and/or settings of the vehicle media playback system 114. The display device 822 can also include other types of display panels such as a light emitting diode (LED) panel. In some embodiments, the display device 822 can also display image or video content.

The stored media interface assembly 824 reads media content stored on a physical medium. In some embodiments, the stored media interface assembly 824 comprises one or more devices for reading media content from a physical medium such as a compact disc or cassette tape.

The amplifier 806 operates to amplify a signal received from the vehicle head unit 804 and transmits the amplified signal to the speaker 808. In this manner, the media output 124 can be played back at a greater volume. The amplifier 806 may include a power source to power the amplification.

The speaker 808 operates to produce an audio output (e.g., the media output 124) based on an electronic signal. The speaker 808 can include one or more vehicle embedded speakers 830 disposed at various locations within the vehicle V. In some embodiments, separate signals are received for at least some of the speakers (e.g., to provide stereo or surround sound).

In other embodiments, the speaker 808 can include one or more external speakers 832 which are arranged within the vehicle V. One or more external speakers 832 can be connected to the vehicle head unit 804 using a wired interface or a wireless interface. In some embodiments, the external speakers 832 can be connected to the vehicle head unit 804 using Bluetooth. Other wireless protocols can be used to connect the external speakers 832 to the vehicle head unit 804. In other embodiments, a wired connection (e.g., a cable) can be used to connect the external speakers 832 to the vehicle head unit 804. Examples of the wired connection include an analog or digital audio cable connection and a universal serial bus (USB) cable connection. The external speaker 832 can also include a mechanical apparatus for attachment to a structure of the vehicle.

FIG. 14 illustrates an example ecosystem 900 for the PMSA system 110 of FIG. 1. In some embodiments, the ecosystem 900 is implemented at least in part with the system 100 as illustrated and described in FIG. 1. For example, the ecosystem 900 includes the PMSA system 110, the media delivery system 112, and a user computing device 102. As described herein, the PMSA system 110, the media delivery system 112, and the user computing device 102 can be in data communication via the network 116 as illustrated in FIG. 1.

In some embodiments, the ecosystem 900 is configured to provide personalized media content to the PMSA 110 before first operation of the PMSA 110. At the time the PMSA 110 is ordered, the media delivery system 112 assigns media contexts to each of a plurality of preset buttons 412, as discussed in FIG. 10. Updates can be made to the contexts selected for each preset button 412 based on one or both of new media consumption through the user's media streaming account, and changes made to the settings of the PMSA in response to inputs received from a user computing device

102. These updates can be made up until the moment that the PMSA 110 is first powered on.

The user computing device 102 includes the music playback application 294 as described with reference to FIGS. 1 and 4. The music playback application 294 includes a user interface operable to request media content for playback on the user computing device 102. A media content request 902 is communicated to the media delivery system 112. The media server application 212 generates a media content stream 904 that is communicated back to the user computing device 102 for playback. The media content request 902 is analyzed and used to update the taste profile 242.

The music playback application 294 includes user settings 296 that can be modified through the user interface 298. Inputs are received through the user interface 298 to modify user settings 296. The user settings 296 can include settings for the PMSA 110. When a PMSA setting is modified at the music playback application 294, a PMSA setting request 906 is communicated to the media delivery system 112. The personal media streaming appliance configuration engine 258 receives the request and updates the PMSA preset data 259 for the appliance associated with the user account. Then personal media streaming appliance server application 250 returns a PMSA setting confirmation 908 to the user computing device 102.

Referring still to FIG. 14, the media delivery system 112 includes the media server application 212 and the PMSA server application 250 (as described also in FIG. 3). The PMSA server application 250 can include the PMSA configuration engine 258 which includes an appliance provisioning engine 126 and PMSA preset data 259.

In some embodiments, the PMSA configuration engine 258 operates to receive the PMSA setting request 906 from the computing device 102 and update the PMSA preset data 259. The PMSA configuration engine 258 continually updates the PMSA preset data 259 as each taste profile 242 is updated. As media content is played on the user computing device 102, the media server application 212 updates the taste profile 242. The personal media streaming appliance configuration engine 258 then updates the PMSA preset data 259. The PMSA preset data 259 includes assignments of media contexts to preset buttons 412. In embodiments where the PMSA has been ordered for delivery, the PMSA preset data 259 is updated up until the point when the PMSA 110 is first powered on. The PMSA 110 is configured to receive the PMSA preset data 259 upon receiving a command to power on.

The appliance provisioning engine 126 operates to ensure that the PMSA 110 and its settings are linked to the correct user streaming account. The link provided by the appliance provisioning engine 126 is utilized to determine which settings and media content are communicated to the PMSA 110 when it is first powered on.

Upon powering on the PMSA 110, some preset data, media content, and/or configuration information may be immediately communicated from the media delivery system 112 to the PMSA 110. In other embodiments, the media delivery system 112 stores all of the configuration data and media content for the PMSA 110 in the cloud.

The preset-based media delivery engine 910 of the media delivery system 112 operates to determine media content associated with one or more of the preset buttons 412 of the PMSA system 110. In some embodiments, the preset-based media delivery engine 910 operates to receive a preset signal 912 from the PMSA system 110 and determine which media content context is associated with the corresponding preset signal 912 and user account. The preset signal 912 is further described in FIG. 15. In some embodiments, the preset signal 912 is generated at the PMSA system 110 upon receiving an input of selecting a preset button 412. In these embodiments, the selection (or activation) of the preset button 412 is regarded as a preset signal source. The preset signal 912 can include information that identifies the preset button 512 selected at the PMSA system 110. The preset signal 912 is used by the preset-based media delivery engine 910 to identify media content associated with the preset button 412.

When the media delivery system 112 identifies the media content based on the preset signal 912, the media delivery system 112 transmits a media content stream 914 to the PMSA system 110 for playback.

FIG. 15 is a block diagram that illustrates an example of the preset signal 912 of FIG. 14. In some embodiments, the preset signal 912 includes user account ID 930, device ID 932, and preset button ID 934.

The user account information 930 includes information that identifies user accounts that are associated with PMSA systems 110. In some embodiments, the user account information 930 includes user account identifiers for identifying the user accounts that match the respective PMSA systems 110. A user account identifier can be a string of numbers and/or letters that identify a user account. An example of the user account information 930 is illustrated and described in more detail with reference to FIG. 11.

In some embodiments, when the media delivery system 112 receives the preset signal 912, the media delivery system 112 can retrieve the user account information 930 and determine a user account that matches the preset signal 912. For example, the PMSA setting request 606 can include a user account identifier that identifies a user account associated with the PMSA system 110, and the media delivery system 112 can process the preset signal 912 and look up the user account information 930 to determine which user account in the user account information 930 is associated with the PMSA system 110.

In other embodiments, the preset signal 912 does not include user account ID 930. The media delivery system 112 can rely on the device ID 932 to look up the account with which the PMSA system 110 is associated.

The device ID 932 includes information that identifies one or more PMSA systems 110. In some embodiments, the device ID 932 includes device identifiers for identifying PMSA systems 110. A device identifier can be a string of numbers and/or letters that identify a PMSA system. An example of the device ID 932 is illustrated and described in more detail with reference to FIG. 11.

The preset button ID 934 includes information about the preset buttons 412 of the PMSA systems 110, such as preset identifiers that identify the preset buttons 412. A preset identifier can be a string of numbers and/or letters that identify a preset button. In some embodiments, the preset button ID 934 further includes media content that is associated with the preset buttons 412. An example of the preset button ID 934 is illustrated and described in more detail with reference to FIG. 11.

FIG. 16 is a block diagram that illustrates an example of the PMSA preset data 259 of FIG. 14. In some embodiments, the PMSA preset data 259 include user account information 1002, device information 1004, preset information 1006, device status information 1008, and media playback state information 1010.

The PMSA preset data 259 include information associated with the preset buttons 412 of the PMSA system 110. In some embodiments, the PMSA preset data 259 includes

information for a plurality of PMSA systems **110** and can be used by the media delivery system **112** to control the plurality of PMSA systems **110**. In other embodiments, the PMSA preset data **259** can be dedicated to a single PMSA system **110** or a limited group of PMSA systems.

The user account information **1002** includes information that identifies user accounts that are associated with PMSA systems **110**, respectively. In some embodiments, the user account information **1002** includes user account identifiers for identifying the user accounts that match the respective PMSA systems **110**. A user account identifier can be a string of numbers and/or letters that identify a user account. An example of the user account information **1002** is illustrated and described in more detail with reference to FIG. **11**.

In some embodiments, when the media delivery system **112** receives the preset signal **912**, the media delivery system **112** can retrieve the user account information **1002** and determine a user account that matches the preset signal **912**. For example, the preset signal **912** can include a user account identifier that identifies a user account associated with the PMSA system **110**, and the media delivery system **112** can process the preset signal **912** and look up the user account information **1002** to determine which user account in the user account information **1002** is associated with the PMSA system **110**.

The device information **704** includes information that identifies one or more PMSA systems **110**. In some embodiments, the device information **704** includes device identifiers for identifying PMSA systems **110**. A device identifier can be a string of numbers and/or letters that identify a PMSA system. An example of the device information **704** is illustrated and described in more detail with reference to FIG. **11**.

In some embodiments, when the media delivery system **112** receives the preset signal **912**, the media delivery system **112** can retrieve the device information **1004** and determine a device identifier that matches the preset signal **912**. For example, the preset signal **912** can include a device identifier that identifies the PMSA system **110**, and the media delivery system **112** can process the preset signal **912** and look up the device information **1004** to determine which PMSA system matches the device identifier included in the preset signal **912**.

The preset information **1006** includes information that identifies one or more preset buttons **412** of PMSA systems **110**. In some embodiments, the preset information **1006** includes preset identifiers for identifying preset buttons of PMSA systems **110**. A preset identifier can be a string of numbers and/or letters that identify a preset button of a PMSA system. An example of the preset information **1006** is illustrated and described in more detail with reference to FIG. **11**.

In some embodiments, when the media delivery system **112** receives the preset signal **912**, the media delivery system **112** can retrieve the preset information **1006** and determine a preset button identifier that matches the preset signal **912**. For example, the preset signal **912** can include a preset button identifier that identifies a preset button of a PMSA system **110**. The media delivery system **112** can process the preset signal **912** to look up the preset information **1006**. The preset information **1006** is used to determine which preset button matches the preset button identifier included in the preset signal **912**.

The device status information **1008** includes information about statuses of PMSA systems **110**. Each of the PMSA systems **110** can be in either an active state or an inactive state. In some embodiments, when a PMSA system **110** is in an active state, the PMSA system **110** is in operation and accessible by the media delivery system **112** via the network **116**. When a PMSA system **110** is in an inactive state, the PMSA system **110** is not in operation and inaccessible by the media delivery system **112** via the network **116**.

The media playback state information **1010** includes information about media content playback via PMSA systems **110**. In some embodiments, the media playback state information **1010** is provided for each user account. In other embodiments, the media playback state information **1010** is provided for each media playback device. In yet other embodiments, the media playback state information **1010** is provided for each media context. In still other embodiments, the media playback state information **1010** is provided for each media content item.

In some embodiments, the media playback state information **1010** includes current context information **1030**, current track information **1032**, current position-in-track information **1034**, playback control status information **1036**, playback settings information **1038**, subsequent track information **1040**, and playback history information **1042**.

The current context information **1030** includes information about a media context that is being currently played.

The current track information **1032** includes information about a media content item (e.g., track) that is currently being played. The currently-playing media content item can be one of the media content items included in the currently-playing media context.

The current position-in-track information **1034** includes information about a current playback position of the media context. For example, the current position-in-track information **1034** includes a time (e.g., an elapsed time or progress time) that has elapsed since the beginning of playback of the media context. In other embodiments, the current position-in-track information **1034** includes a remaining time until the media context is complete to play. In other embodiments, the current position-in-track information **1034** can be configured for a particular media content item.

The playback control status information **1036** includes information that indicates whether the current media content item is currently being played or stopped (including paused).

The playback settings information **1038** include information about one or more settings of PMSA systems **110**. Examples of the settings of PMSA systems **110** include preset information, playback settings, sound quality settings, notification settings, advertisement settings, and other settings for controlling operation of the PMSA systems **110** or media content playback via the PMSA systems **110**.

The subsequent track information **1040** includes information about a media content item (e.g., track) that is to be played after the current media content item. In some embodiments, the subsequent track information **1040** identifies a single media content item. In other embodiments, the subsequent track information **1040** identifies a plurality of media content items in order.

The playback history information **1042** includes information about the media content items that have been played. In some embodiments, the playback history information **1042** can be provided as the playback history by each user account. In other embodiments, the playback history information **1042** can be provided as the playback history by each media playback device.

The various examples and teachings described above are provided by way of illustration only and should not be construed to limit the scope of the present disclosure. Those skilled in the art will readily recognize various modifications and changes that may be made without following the

examples and applications illustrated and described herein, and without departing from the true spirit and scope of the present disclosure.

The invention claimed is:

1. A system for providing personalized media content to a personal media streaming appliance (PMSA), the system comprising:

a media delivery system comprising:

a media content server comprising:

a processing device,

a memory device, and

a media server application configured to provide a media streaming service; and

a personal media streaming appliance server comprising:

a processing device,

a memory device, and

a personal media streaming appliance configuration engine configured to:

store an identifier associated with a user media streaming account of a user and an identifier associated with a personal media streaming appliance in a table to link the user media streaming account to the personal media streaming appliance without user input that is received upon or after the PMSA's first use by the user;

automatically determine personalized content to provide to the personal media streaming appliance upon first use by the user;

automatically select one or more media contexts, wherein the personalized content matches the one or more media contexts; and

assign the one or more media contexts to a plurality of preset settings of the personal media streaming appliance before the PMSA's first use by the user.

2. The system of claim 1, wherein the media server application comprises user accounts data and taste profiles data for each of a plurality of users and the personal media streaming appliance configuration engine utilizes the taste profiles data for determining personalized content.

3. The system of claim 1, wherein the personal media streaming appliance configuration engine comprises an appliance provisioning engine configured to automatically assign media contexts to each of a plurality of preset buttons of the personal media streaming appliance, and a PMSA preset data store configured to store information regarding the assigned media contexts for each preset setting of the personal media streaming appliance.

4. The system of claim 3, wherein the personal media streaming appliance configuration engine receives an appliance identifier from a user computing device.

5. The system of claim 1, further comprising:

a personal media streaming appliance system comprising:

a user input device;

a media content output device; and

a memory device comprising an appliance setting configuration engine configured to receive personalized settings for outputting media content from the media delivery system.

6. The system of claim 5, wherein the personal media streaming appliance system comprises at least 3 preset buttons and the appliance provisioning engine assigns a unique context to each of the preset buttons, wherein each unique context is one of an album, an artist, a genre, a podcast, a radio station, an audiobook, and a playlist.

7. The system of claim 5, wherein the personal media streaming appliance system is configured to output media content personalized for the user account of the user upon first use by the user without receiving input from physical controls.

8. The system of claim 1, wherein:

the storing the identifier associated with the user media streaming account of the user and the identifier associated with the personal media streaming appliance comprises storing the identifier associated with the user media streaming account of the user and the identifier associated with the personal media streaming appliance before the user receives the PMSA from a vendor; and

the assigning the one or more media contexts to the plurality of preset settings of the PMSA comprises assigning the one or more media contexts to the plurality of preset settings of the PMSA before the user receives the PMSA from the vendor.

9. A method for providing personalized media content to a personal media streaming appliance, the method comprising the steps of:

providing, by a media content server executing a media server application, a media streaming service;

linking, by a personal media streaming appliance configuration engine, a user media streaming account of a user to a personal media streaming appliance without user input that is received upon or after the PMSA's first use by the user by storing an identifier associated with the user media streaming account and an identifier associated with the personal media streaming appliance in a table;

automatically determining personalized content to provide to a personal media streaming appliance upon first use by the user;

automatically selecting one or more media contexts, wherein the personalized content matches one or more media contexts; and

assigning the one or more media contexts to a plurality of preset settings of the personal media streaming appliance before the PMSA's first use by the user.

10. The method of claim 9, further comprising the steps of:

storing, by the media server application, user accounts data and taste profiles data for each of a plurality of users; and

determining, by the personal media streaming appliance configuration engine, personalized content based on the taste profiles data.

11. The method of claim 9, further comprising the steps of:

assigning, by an appliance provisioning engine, media contexts to each of the plurality of preset buttons of the personal media streaming appliance; and

storing, by a PMSA preset data store, information regarding the assigned media contexts for each preset setting of the personal media streaming appliance.

12. The method of claim 11, further comprising:

receiving, by the personal media streaming appliance configuration engine, an appliance identifier from a user computing device.

13. The method of claim 9, further comprising the step of:

receiving, by an appliance setting configuration engine, personalized settings for outputting media content from a media delivery system.

14. The method of claim 13, further comprising the step of:

assigning a unique context to each of at least 3 preset buttons of the personal media streaming appliance, wherein each unique context is one of an album, an artist, a genre, a podcast, a radio station, an audiobook, and a playlist.

15. The method of claim 13, further comprising the step of:

outputting media content personalized for the user account of the user upon first use without receiving input from physical controls.

16. The system of claim 9, wherein:

the storing the identifier associated with the user media streaming account of the user and the identifier associated with the personal media streaming appliance comprises storing the identifier associated with the user media streaming account of the user and the identifier associated with the personal media streaming appliance before the user receives the PMSA from a vendor; and

the assigning the one or more media contexts to the plurality of preset settings of the PMSA comprises assigning the one or more media contexts to the plurality of preset settings of the PMSA before the user receives the PMSA from the vendor.

17. A non-transitory computer-readable medium having stored thereon one or more sequences of instructions for causing one or more processors to perform:

providing, by a media content server executing a media server application, a media streaming service;

linking, by a personal media streaming appliance configuration engine, a user media streaming account of a user to a personal media streaming appliance without user input that is received upon or after the PMSA's first use by the user by storing an identifier associated with the user media streaming account of the user and an identifier associated with the personal media streaming appliance in a table;

automatically determining, without user input, personalized content to provide to the personal media streaming appliance upon first use;

automatically selecting one or more media contexts, wherein the personalized content matches one or more media contexts; and

assigning the one or more media contexts to a plurality of preset settings of the personal media streaming appliance before the PMSA's first use by the user.

18. The computer-readable medium of claim 17, further having stored thereon a sequence of instructions for causing the one or more processors to perform:

storing, by the media server application, user accounts data and taste profiles data for each of a plurality of users; and

determining, by the personal media streaming appliance configuration engine, personalized content based on the taste profiles data.

19. The computer-readable medium of claim 17, further having stored thereon a sequence of instructions for causing the one or more processors to perform:

assigning, by an appliance provisioning engine, media contexts to each of the plurality of preset buttons of the personal media streaming appliance; and

storing, by a PMSA preset data store, information regarding the assigned media contexts for each preset setting of the personal media streaming appliance.

20. The computer-readable medium of claim 19, further having stored thereon a sequence of instructions for causing the one or more processors to perform:

receiving, the personal media streaming appliance configuration engine, an appliance identifier from a user computing device.

21. The computer-readable medium of claim 17, further having stored thereon a sequence of instructions for causing the one or more processors to perform:

receiving, by an appliance setting configuration engine, personalized settings for outputting media content from a media delivery system.

22. The computer-readable medium of claim 21, further having stored thereon a sequence of instructions for causing the one or more processors to perform:

assigning a unique context to each of at least 3 preset buttons of the personal media streaming appliance, wherein each unique context is one of an album, an artist, a genre, a podcast, a radio station, an audiobook, and a playlist.

23. The computer-readable medium of claim 21, further having stored thereon a sequence of instructions for causing the one or more processors to perform:

outputting media content personalized for the user account of the user upon first use by the user without receiving input from physical controls.

24. The system of claim 17, wherein:

the storing the identifier associated with the user media streaming account of the user and the identifier associated with the personal media streaming appliance comprises storing the identifier associated with the user media streaming account of the user and the identifier associated with the personal media streaming appliance before the user receives the PMSA from a vendor; and

the assigning the one or more media contexts to the plurality of preset settings of the PMSA comprises assigning the one or more media contexts to the plurality of preset settings of the PMSA before the user receives the PMSA from the vendor.

* * * * *