(12) INTERNATIONAL APPLICATION PUBLISHED UNDER THE PATENT COOPERATION TREATY (PCT)

(19) World Intellectual Property Organization
International Bureau

(43) International Publication Date
13 March 2014 (13.03.2014)

WIPO | PCT

(10) International Publication Number
WO 2014/037583 A2

(51) International Patent Classification:
H02J 3/36 (2006.01)

(21) International Application Number:
PCT/EP2013/068735

(22) International Filing Date:
10 September 2013 (10.09.2013)

(25) Filing Language: English

(26) Publication Language: English

(30) Priority Data:
12183730.6 10 September 2012 (10.09.2012) EP

(71) Applicant: **ABB TECHNOLOGY AG** [CH/CH]; Affolternstrasse 44, CH-8050 Zürich (CH).

(72) Inventors: **KIEFERNDORF, Frederick**; Steinäckerstrasse 7, CH-5442 Fislisbach (CH). **DUJIC, Drazen**; Bahnhofstrasse 36, CH-5430 Wettingen (CH). **CANALES, Francisco**; Husmatt 2, CH-5405 Baden-Dättwil (CH).

(74) Agent: **FOLINI, Oliver**; ABB Patent Attorneys, Association 154, c/o ABB Schweiz AG, Intellectual Property CH-IP, Brown Boveri Strasse 6 CH-5400 Baden (CH).

(81) Designated States *(unless otherwise indicated, for every kind of national protection available)*: AE, AG, AL, AM, AO, AT, AU, AZ, BA, BB, BG, BH, BN, BR, BW, BY, BZ, CA, CH, CL, CN, CO, CR, CU, CZ, DE, DK, DM, DO, DZ, EC, EE, EG, ES, FI, GB, GD, GE, GH, GM, GT, HN, HR, HU, ID, IL, IN, IS, JP, KE, KG, KN, KP, KR, KZ, LA, LC, LK, LR, LS, LT, LU, LY, MA, MD, ME, MG, MK, MN, MW, MX, MY, MZ, NA, NG, NI, NO, NZ, OM, PA, PE, PG, PH, PL, PT, QA, RO, RS, RU, RW, SA, SC, SD, SE, SG, SK, SL, SM, ST, SV, SY, TH, TJ, TM, TN, TR, TT, TZ, UA, UG, US, UZ, VC, VN, ZA, ZM, ZW.

(84) Designated States *(unless otherwise indicated, for every kind of regional protection available)*: ARIPO (BW, GH, GM, KE, LR, LS, MW, MZ, NA, RW, SD, SL, SZ, TZ, UG, ZM, ZW), Eurasian (AM, AZ, BY, KG, KZ, RU, TJ, TM), European (AL, AT, BE, BG, CH, CY, CZ, DE, DK, EE, ES, FI, FR, GB, GR, HR, HU, IE, IS, IT, LT, LU, LV, MC, MK, MT, NL, NO, PL, PT, RO, RS, SE, SI, SK, SM, TR), OAPI (BF, BJ, CF, CG, CI, CM, GA, GN, GQ, GW, KM, ML, MR, NE, SN, TD, TG).

Published:

— *without international search report and to be republished upon receipt of that report (Rule 48.2(g))*

(54) Title: POWER DISTRIBUTION SYSTEM FOR AUTONOMOUS FACILITIES

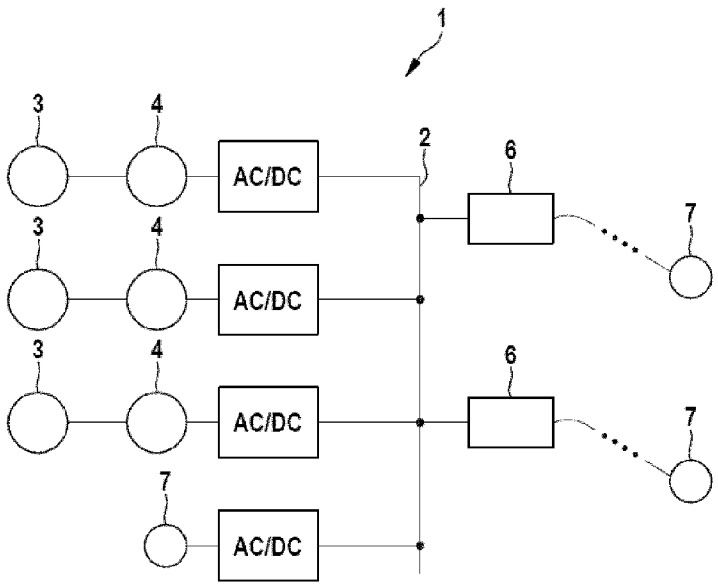

Fig. 1

(57) Abstract: The present invention relates to a power distribution system (1) for an autonomous facility, such as an offshore platform, having a plurality of loads (7) to be supplied, comprising: - a DC distribution bus for conveying electrical energy to one or more loads, wherein the DC distribution bus is configured to carry a low or medium DC voltage; - a converter for converting generated AC power to DC voltage on the DC distribution bus; and - for at least one of the loads, a galvanically isolated converter to supply one of DC power, single phase AC power or multiple-phase AC power to the load wherein the galvanically isolated converter (6) comprises a medium-frequency transformer (12), which is inherently built inside the structure of the converter (6).

WO 2014/037583 A2

Power distribution system for autonomous facilities

Technical field

The present invention relates to a power supply concept for supplying power to equipment in autonomous remote facilities, in particular on offshore platforms.

Related art

In the petroleum industry, wells may have insufficient natural flow. In such cases, electrical submersible pumps are often used to increase the flow of the produced oil. Variable speed drives are needed to operate the electrical submersible pumps to provide a soft start-up and to achieve a full range of flow rates.

One of the requirements of electrical submersible pumps is the need for a galvanic isolation between the platform power supply and the pump motor. This allows for the pump to be fully utilized, even in the event of faults in the motor such as, for example a phase to ground fault in one of the motors. This may help to increase the lifetime of the motor since a replacement of the motor is usually very costly. The high cost of installing and removing an electrical submersible pump requires the use of the motor until a complete failure has been detected.

A typical offshore platform power distribution system is based on multiple generators driven by prime movers, such as diesel engines or gas turbines, connected to a medium-voltage AC distribution bus. The primary loads are motor-driven pumps, both electrical submersible pumps and other types of pumps located at the platform apart from a variety of other loads for the facilities on the platform.

A common power distribution system uses multiple low-frequency transformers for providing a voltage isolation and transformation. The grid directly supplied by the plurality of generators carries a medium-voltage AC power, so that the plurality of generators have to be synchronized with one another in order to create a stable grid frequency. In particular for light-load conditions, this means that these are not always running at the most efficient speed.

A further issue for driving multiple electrical submersible pumps is the long cable connections that are needed to connect the offshore platform to the well hole on the sea floor where the pump is located. Cable lengths are typically in the range of tens of kilometers. The steep voltage transitions typically produced by power electronic converters in drives can cause reflections in the long cable that may lead to large overvoltages on the motor terminals. To mitigate the problems associated with the use of long cables, a filter unit is used to reduce the transmission line effects. These filter units are usually bulky and constitute a significant portion of the weight and volume of the drive unit.

Due to the large distances between the drive unit and the electrical submersible pumps, the voltage drop over the connecting cable is significant. In order to deal with the voltage drop between the inverter and the remote electrical submersible pump, the inverter output voltage must be correspondingly increased to be able to transfer a sufficient amount of electrical power to the pump. This is often realized by means of a step-up transformer connected to the output of an inverter of a drive unit and before the cable transmission, which further contributes to the weight and volume of a drive unit.

In document US 2010/133901 a sub-sea power delivery system is disclosed in which a power distribution system provides power from a surface location to a sub-sea location by means of a cable connection. The power distribution system involves a modular power converter building block at the power source side and at the sub-sea load side. It is one main drawback of this solution that a sub-sea converter is required and that power is transferred via a DC cable.

Summary of the present invention

It is therefore an object of the present invention to provide a power distribution system for autonomous facilities, such as offshore platforms, which is reduced in size and weight and allows for an optimization of the efficiency of the electrical power generators.

The above object is achieved by the power distribution system for an autonomous facility preferably used on an offshore platform according to claim 1.

Further embodiments are indicated in the depending subclaims.

According to a first aspect, a power distribution system for an autonomous facility on an offshore platform, is provided having a plurality of loads to be supplied, the system comprising:

- a DC distribution bus for conveying electrical energy to one or more loads, wherein the DC distribution bus is configured to carry a low or medium DC voltage;
- a converter for converting generated AC power to DC voltage on the DC distribution bus; and
- for at least one of the loads, a galvanically isolated converter to supply one of DC power, single phase AC power or multiple-phase AC power to the load wherein the galvanically isolated converter (6) comprises a medium-frequency transformer (12), which is inherently built inside the structure of the converter (6).

A common power distribution system uses multiple low-frequency transformers for providing a voltage isolation and transformation. The grid directly supplied by the plurality of generators carries a medium-voltage AC power, so that the plurality of generators have to be synchronized with one another in order to create a stable grid frequency. In particular for light-load conditions, this means that these are not always running at the most efficient speed.

On the other hand, in a system that is generally realized with a plurality of pumps, galvanic isolation provided per pump, prevents the whole platform to go out of operation in case of a total failure on one of the pumps, by effectively decoupling different pumps from the source.

One idea of the present invention is therefore to provide a power distribution system for autonomous facilities, such as offshore platforms, wherein a power distribution bus is provided to distribute power to a plurality of loads and configured as a low or medium voltage DC bus from which electrical power is taken by means of at least one galvanically isolated converter. By presence of a plurality of galvanic isolated inverters connected to a common DC bus a galvanic isolation can be achieved in a facilitated manner.

For the above power distribution system it is advantageous to replace a local AC distribution system by a DC distribution system, in order to optimize the energy efficiency of multiple prime movers during operation, in particular for light-load conditions of generators.

Depending on the types of loads, a galvanic isolated converter can be configured to feed: DC loads, single phase AC loads or 3-phase AC loads. Usually there is a plurality of galvanically isolated converters connected to the same DC distribution bus in order to serve a plurality of loads connected in close or remote proximity of the converter.

For at least a part of the loads, such as an electrical submersible pump, medium-frequency transformers may be used for the galvanic isolation and these transformers may be inherently built inside the structure of the converter.

According to an embodiment, at least one of the galvanically isolated converters may comprise converter cells including:

- a medium-frequency transformer having a medium operating frequency;
- a DC/AC converter stage converting DC power from the DC distribution bus to AC power at the operating frequency; and
- an AC/AC converter stage for converting output power of the medium-frequency transformer to a low-frequency AC single-phase or multiple-phase power for operating the load.

Furthermore, galvanically isolated converter may have one converter unit per phase, wherein each of the converter units has a plurality of converter cells which may have DC and AC terminals.

Moreover, DC input terminals of the converter cells may be connected in parallel while their AC output terminals may be connected in series.

According to one embodiment, one of the AC output terminals of the converter units may be connected to a common node, wherein the other AC output terminals of the converter units are output for a respective phases of the medium-voltage AC load, e.g. motor pump, wherein the DC input terminals of the converter units are connected in parallel.

In an alternative embodiment, the AC output terminals of the converter units may be connected to each other in a delta configuration, wherein the DC input terminals of the converter units are connected in parallel.

In case of a series connection of the cells on the AC side, a various configurations of a galvanic isolated converter may be possible. Output (AC) side can be configured for single phase AC power and/or three-phase AC power.

When configured for AC power, a high resolution multilevel output voltage can be created with the number of discrete voltage levels being proportional to the number of cells used. This improves the waveform quality and reduces the filtering requirements, so that filter units can be designed smaller, thereby saving weight and space, or completely omitted in some cases.

Due to the modular configuration of the converter arrangement, almost any voltage can be achieved on the AC side by selecting the proper number of converter cells, so that there is no need for use of a step-up transformer.

According to an embodiment, at least one of the galvanically isolated converters may comprise converter cells including:

- a medium-frequency transformer having a medium operating frequency;

- a DC/AC converter stage converting DC power from the DC distribution bus to AC power at the operating frequency; and
- an AC/DC converter stage for converting output power of the medium frequency transformer to a DC power for operating the load.

In such a case, when DC power has to be delivered at the output, the converter cells may be connected in parallel to the DC distribution bus, wherein the DC output terminals of the converter cells are connected in either series or parallel connection.

It may be provided that each of the converter cells is configured to be bypassed in case of failure so that the galvanically isolated converter can continue to be operated with the rest of the converter cells.

According to a further aspect, the power distribution system may be used on an offshore platform, wherein at least one of the loads is remote, in particular submersible, and connected via a cable to the galvanically isolated converter.

Brief description of the drawings

Preferred embodiments of the present invention are described in more detail in conjunction with the accompanying drawings, in which:

Figure 1	shows a general architectural layout for a power distribution system for autonomous remote facilities; and
Figures 2a to 2c	show a configuration for a DC/AC converter with galvanic isolation as used in the power supply of the architectural layout according to Figure 1.

Detailed description of embodiments

Figure 1 schematically shows an architectural layout for a power distribution system 1 for use in autonomous facilities, such as offshore platforms and the like.

One main component of the power distribution system 1 is the DC distribution bus 2 which provides medium-voltage or low-voltage DC power in a distributed manner, so as to supply loads throughout the autonomous facility with electrical power.

Electrical power is supplied to the DC distribution bus 2 by means of one or more prime movers 3 which, e. g., provide kinetic or rotational energy to be transformed into electrical energy. The prime movers 3 can comprise gas turbines or diesel engines.

Each of the prime movers 3 is coupled to a generator 4 which transforms the mechanical energy into electrical energy. The electrical energy is provided as three-phase AC power which is converted into the DC voltage of the DC distribution bus 2 by means of the respective AC/DC converters 5. The AC/DC converters 5 can be designed as active or passive rectifiers.

The conversion of the generated electrical power into a DC voltage to be distributed has the benefit that the generators are not required to be driven at synchronous speed at all load levels. This is particularly important at lower loads. The rectification of the generated AC power into a DC power allows for the generators to be driven at the speed of maximum efficiency under all conditions.

To provide AC or DC power to the loads, DC/AC or DC/DC converter arrangements 6 can be coupled to the DC distribution bus 2 and are used as an interface to the loads 7. Generally, the loads 7 can be operable with DC or single-phase AC or three-phase AC power. Depending on the kind of load 7, a DC/AC or DC/DC conversion is implemented in the converter arrangement 6.

The loads can be connected to the respective converter arrangement 6 by means of a cable. In particular on offshore platforms, submersible pumps may be located at a distance from the converter arrangement 6, so that long cables are used for interconnection. Due to the voltage drop in such a cable, the converter arrangement 6 is adapted to provide an increased output voltage level.

The converter arrangements 6 provide a built-in isolation which serves for decoupling the input from the output but also adjust the AC output voltage in relation to the fixed DC voltage of the DC distribution bus 2.

One configuration of the converter arrangement 6 for performing a DC/AC conversion is shown in Figures 2a to 2c. A converter unit or a single-phase converter arrangement 20 has a cell configuration with a plurality of stacked single cells 10 to provide a DC/AC conversion. The DC inputs of the single cells 10 are coupled in parallel to the DC distribution bus 2 and in a serial arrangement on the output side to provide the required AC voltage.

As shown in Figure 2b, each cell 10 is configured with an active inverter stage 11 for generating an AC output with a medium operating frequency which is coupled to a medium-frequency transformer stage 12. The medium-frequency transformer stage 12 is inherently built inside each cell 10. The medium-frequency transformer stage 12 preferably has an operating frequency of more than 1 kHz up to several kHz, such as 9 kHz. The secondary side of the medium-frequency transformer 12 is coupled to a rectifier stage 13. The rectifier stage 13 is coupled via a DC link capacitor stage 14 to an active converter stage 15. The active converter stage 15 can be operated to provide an AC or DC power depending on the control algorithm applied. Such a configuration allows for a high flexibility in selecting a required output voltage together with galvanic isolation between the input and output sides of cell 10 of the converter arrangement 6.

To provide a three-phase DC/AC conversion, the single-phase converter arrangement 20 according to Figure 2a is multiply provided, as is shown in Figure 2c. The single-phase cell stacks, as shown in Figure 2a, are connected in parallel on their DC terminals and on the AC side one terminal of each phase stack is connected to a floating node and the other AC terminals of each phase stack are available for a connection to the respective load 7. In the example of operating an electrical submersible pump, the required number of basic cells 10 can easily be stacked in series on the AC output to meet any medium-voltage class requirement of the pump machine. Thus, the ratings of many different pumps can easily be met.

The converter arrangements 6 may also include a filter unit at their outputs to shape a voltage waveform delivered to the loads. Due to the multilevel voltage waveform, the filter units can be designed less bulky, thereby saving weight and space, if needed at all.

Reference list

1	Power distribution system
2	DC distribution bus
3	Prime mover
4	Generator
5	AC/DC converter
6	converter arrangement
7	load
10	converter cell
11	DC/AC converter stage
12	medium-frequency transformer
13	rectifier stage or AC/DC stage
14	DC link capacitor stage
15	active converter stage
20	single-phase converter arrangement

Patent claims

1. Power distribution system (1) for an autonomous facility on an offshore platform, having a plurality of loads (7) to be supplied, comprising:
   - a DC distribution bus (2) for conveying electrical energy to one or more loads (7), wherein the DC distribution bus (2) is configured to carry a low or medium DC voltage;
   - a converter (5) for converting generated AC power to DC voltage on the DC distribution bus (2); and
   - for at least one of the loads (7), a galvanically isolated converter (6) to supply one of DC power, single-phase AC power or multiple-phase AC power to the load (7), wherein the galvanically isolated converter (6) comprises a medium-frequency transformer (12), which is inherently built inside the structure of the converter (6).

2. Power distribution system (1) according to claim 1, wherein at least one of the galvanically isolated converters (6) comprises converter cells (10) including:
   - a medium-frequency transformer (12) operating at a medium operating frequency;
   - a DC/AC converter stage (11) converting DC power from the DC distribution bus (2) to AC power at the operating frequency; and
   - an AC/AC converter stage for converting output power of the medium frequency transformer (12) to a low frequency AC single-phase or multiple phase power for operating the load (7).

3. Power distribution system (1) according to claim 2, wherein the galvanically isolated converter (6) has one converter unit (20) per phase, wherein each of the converter units (20) has a plurality of converter cells (10).

4. Power distribution system (1) according to claim 3, wherein DC input terminals of the converter cells (10) are connected in parallel and AC output terminals of the converter cells (10) are connected in series.

5. Power distribution system (1) according to claims 2 and 3, wherein the DC input terminals of the converter units (20) are connected in parallel, wherein one of the AC output terminals of each converter unit (20) is connected to a common node, wherein the other AC output terminals of the converter units (20) are available for a respective phases of the medium-voltage AC load.

6. Power distribution system (1) according to claims 2 and 3, wherein the DC input terminals of the converter units (20) are connected in parallel, wherein the AC output terminals of the converter units (20) are connected to each other in a delta configuration.

7. Power distribution system (1) according to claims 1, wherein at least one of the galvanically isolated converters (6) comprises converter cells (10) including:
   - a medium-frequency transformer (12) having a medium operating frequency;
   - a DC/AC converter stage (11) converting DC power from the DC distribution bus to AC power at the operating frequency; and
   - an AC/DC converter stage (13) for converting output power of the medium frequency transformer to a DC power for operating the load (7).

8. Power distribution system (1) according to claim 7, wherein the DC input terminals of the converter units (20) are connected in parallel, wherein the DC output terminals of the converter units (20) are connected in either series or parallel connection.

9. Power distribution system (1) according to any of the claims 2 to 8, wherein the converter cells (10) are connected in parallel to the DC distribution bus (2), wherein the output terminals of the converter cells are connected in one of a series or a parallel connection, a star configuration or a delta configuration.

10. Power distribution system (1) according to claim 9, wherein each of the converter cells (10) are configured to be bypassed in case of failure so that the galvanically isolated converter (6) is further operated with the rest of the converter cells (10).

11. Power distribution system (1) according to any of the claims 1 to 10, wherein at least one generator (4) is provided to supply generated AC power to the converter (5).

12. Use of the power distribution system (1) on an offshore platform, wherein at least one of the loads (7) is remote, in particular submersible, and connected via a cable to the galvanically isolated converter (6).

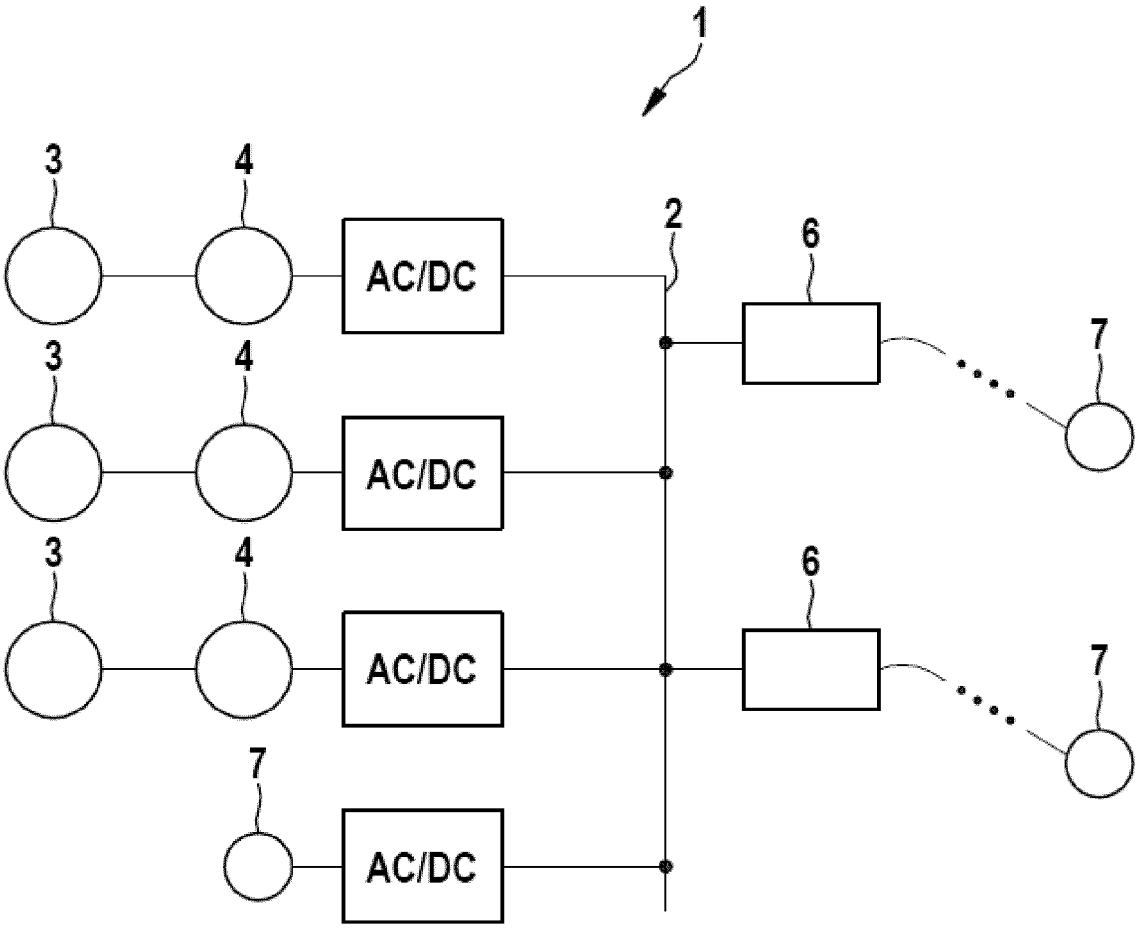

Fig. 1

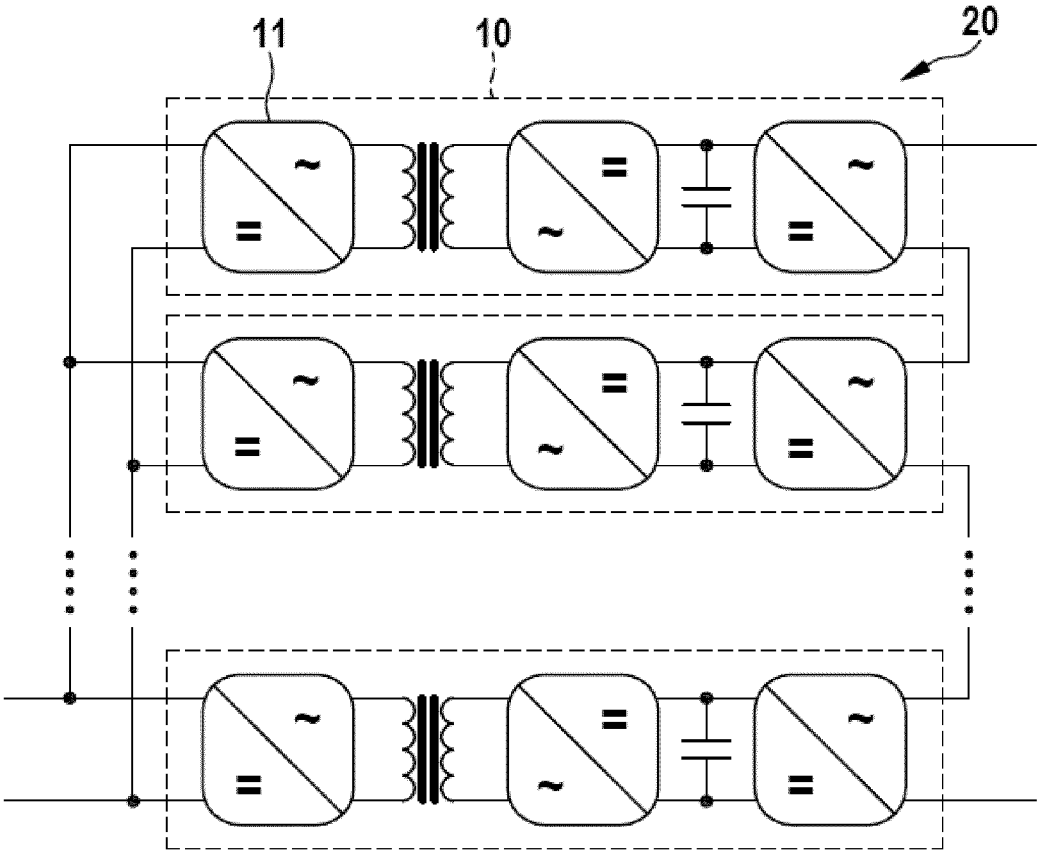

Fig. 2a

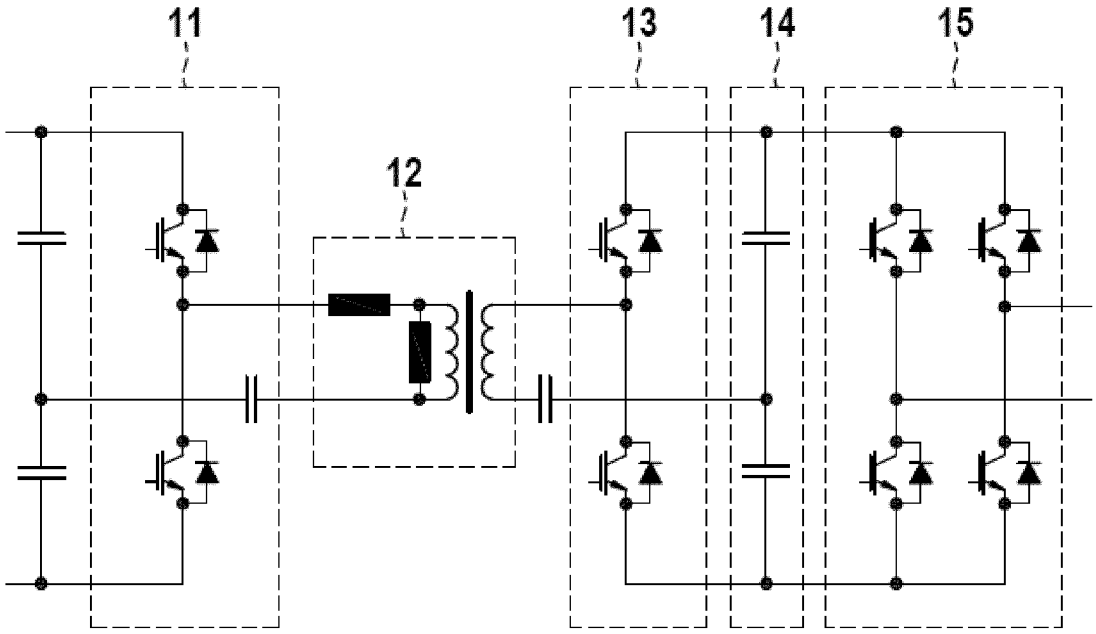

Fig. 2b

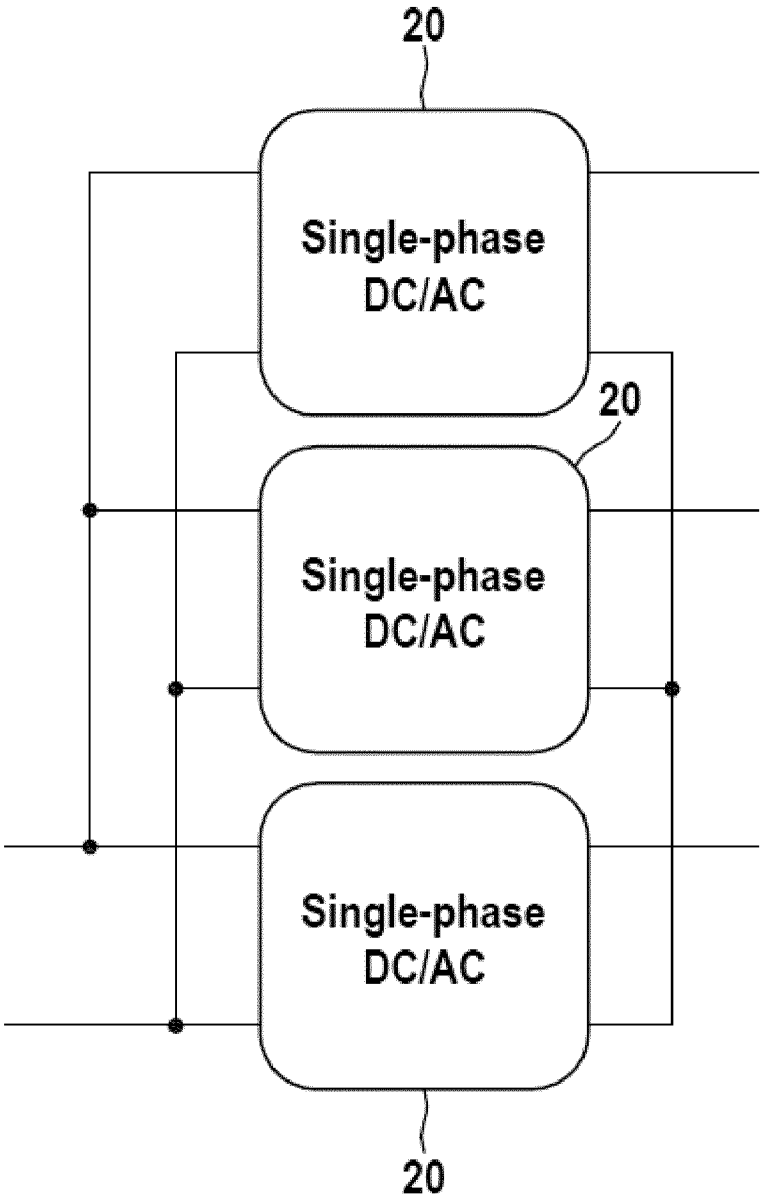
20
Single-phase DC/AC
20
Single-phase DC/AC
Single-phase DC/AC
20

Fig. 2c