July 2, 1935. A. M. BARRETT ET AL 2,006,620

GAME

Filed Aug. 31, 1934

Fig. 1.

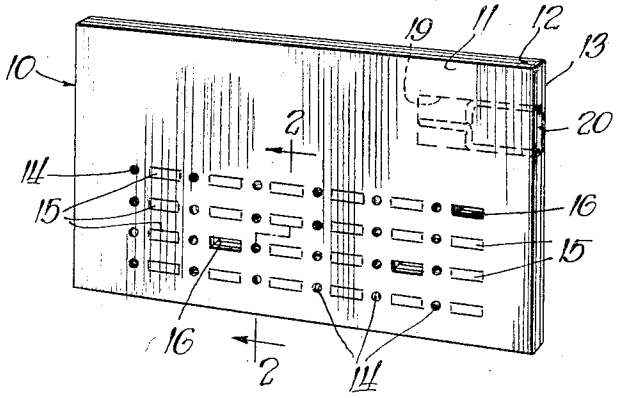

Fig. 2.

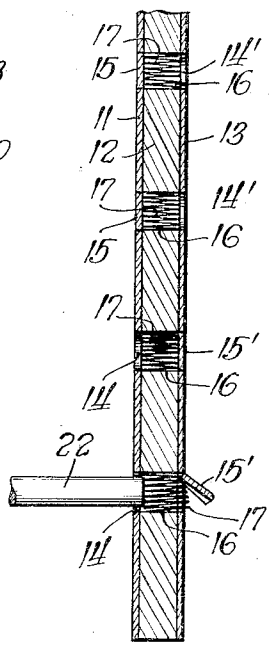

Fig. 3.

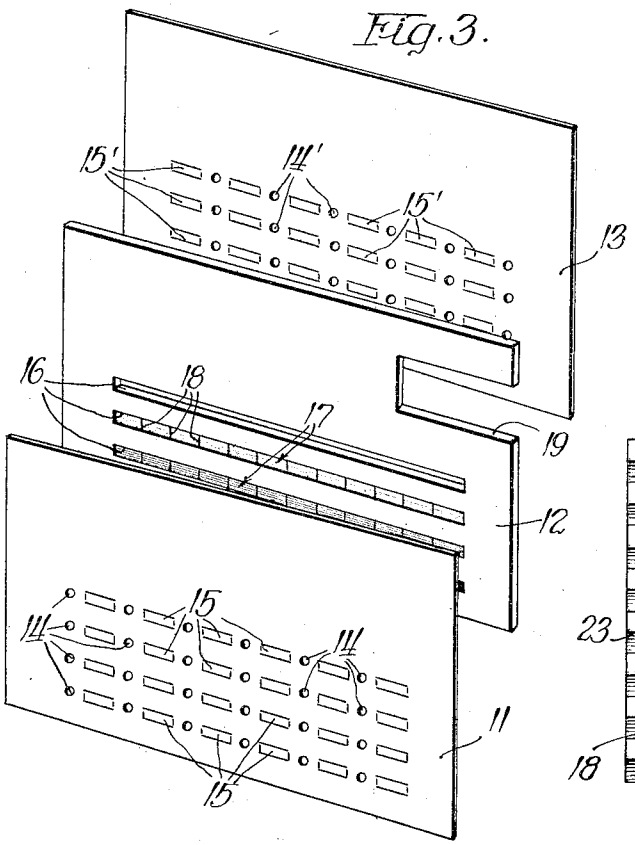

Fig. 4.



Fig. 5.

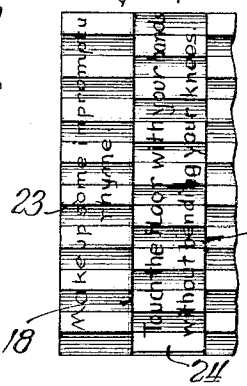

Fig. 6.



Inventors:
Arthur M. Barrett,
Edgar H. Wolfe.

By Brown Jackson Boettcher & Dienner

Attys.

Patented July 2, 1935 2,006,620

UNITED STATES PATENT OFFICE

2,006,620

GAME

Arthur M. Barrett and Edgar H. Wolfe, Chicago, Ill., assignors to The Barrett Bindery Company, Chicago, Ill., a corporation of Illinois

Application August 31, 1934, Serial No. 742,202

10 Claims. (Cl. 273—139)

This invention relates to games, and is more particularly directed to games of the punch board type, in which concealed and folded slips of paper, bearing serial numbers used for the distribution of prizes or the like, or having printed instructions thereon for carrying out stunts or the like, are punched from a board, in a manner well known in this particular art.

In former punch board games of this type with which we are familiar, the slips of paper were individually folded and inserted singly into holes or openings in the board, and required either laborious manual insertion, or the use of expensive machinery in order to obtain proper insertion of the individual slips into the board. Further, in punching out the slips, we have found that the slips come out, in boards of this type, in a tightly rolled form, and must be unrolled or unfolded with considerable difficulty before they are readable.

The present invention, in its preferred embodiment, is directed to a game of the punch board type which is so constructed as to overcome these difficulties, and to the provision of a game of this type which is much easier to assemble and more economical in its manufacture.

A primary object of the present invention is to provide a board construction wherein the slips of paper may be inserted in long strips containing a plurality of individual slips having suitable perforations therebetween to provide for expulsion of an individual slip by the punch during the use of the board. This renders the inserting operation considerably quicker and cheaper than the method heretofore employed, that is, the filling of a plurality of holes in the board by hand.

Another object of the present invention is the provision of a punch board game in which the individual slips, when punched out, drop from the board in partly opened and loosened condition, whereby they may be easily unfolded and read.

Another advantage secured by the present invention is the provision of a much larger display surface, which gives additional advertising appeal in the sale of the game, and also allows more space for instructions, illustrations and directions.

A still further advantage of the present invention resides in a board construction wherein the arrangement of the slips and perforated openings is such that half of the slips are punched out from one side of the board, and the other half from the other side of the board, giving both sides equal advertising value, and also providing for removal of only one slip at a time.

The present invention comprises a relatively heavy intermediate board provided with long relatively narrow slots, which slots are adapted to receive a folded perforated paper of a corresponding length containing a number of individual slips, the paper being transversely folded into the slots and held therein by oppositely disposed closure sheets glued or otherwise secured to the intermediate board. These sheets are provided with alternate openings for receiving a punch member and intermediate perforated flaps for allowing the slip to be expelled, the openings for the expulsion of the slips being formed by removal of the perforated closure flap which is easily broken when the slip is being expelled by a punch inserted from the opposite side of the board.

Other objects and advantages resulting from the novel punch board construction for this type of game, as disclosed in the present invention, will appear more fully from the following detailed description, which, taken in conjunction with the accompanying drawing, will disclose to those skilled in the art the particular construction and operation of a preferred form of my invention.

In the drawing:

Figure 1 is a perspective view of a game board constructed in accordance with the teachings of the present invention;

Figure 2 is a vertical sectional view through a portion of the board, taken substantially along the line 2—2 of Figure 1;

Figure 3 is an exploded perspective view, showing the details of construction and assembly of the game board;

Figure 4 is an elevational view of the key member or punch employed in playing the game;

Figure 5 is a side elevational view of a portion of the folded sheet which is inserted into the board, and which contains the individual slips to be punched from the board; and

Figure 6 is an end elevational view of the sheet shown in Figure 5.

Referring now in detail to Figure 1, the board in its entirety is indicated by the reference numeral 10, and comprises a front sheet member 11, an intermediate board member 12, and a rear sheet member 13. These may all be formed of cardboard or similar material, the intermediate board member 12 being preferably substantially thicker than either of the closure sheets 11 or 13.

Referring now to Figure 3, it will be noted that

the front sheet 11 is provided with alternate vertical rows of punch openings 14 and expulsion flap members 15, the flap members 15 being secured by a perforated margin to the sheet 11. The perforation is provided to facilitate punching out of the slips, the flaps serving to retain the slips within the intermediate board 12 until the punching operation.

The intermediate board 12 is provided with a plurality of spaced longitudinally extending slots 16 which are cut entirely through the board 12, and which extend substantially the entire longitudinal extent of the board. The slots are adapted to receive folded paper strips of corresponding lengths, indicated generally at 17, which are perforated at spaced intervals, as shown at 18, to provide for tearing off the individual slips when they are punched from the board. The sheets 17, when folded, lie entirely within the peripheral limits of the board 12, and fill the slots 16 thereof.

The board 12 is also provided with a cut-out portion 19, which is adapted to form a receptacle for receiving a key member 20, when the sheets 11 and 13 are fastened to the front and rear surfaces of the board. The key 20 is indicated in detail in Figure 4, and comprises a holder portion and a punch portion indicated at 22, the punch portion being rounded and of a diameter corresponding to the diameter of the punch openings 14.

The rear sheet 13 is provided with corresponding punch openings 14' and flaps 15', which, however, are alternated in their spacing with respect to the spacing of the openings 14 and flaps 15 of the sheet 11, so that the first row of perforated flaps 15' of the sheet 13 are disposed opposite to the first row of punch openings 14 of the sheet 11, whereby when the punch is inserted into the opening 14 of the sheet 11, the individual slips carried by the sheet 17 will be expelled through the opening left by tearing of the perforated flap 15' from the sheet 13.

Considering Figures 5 and 6, it will be noted that the sheet 17 comprises a plurality of individual slips containing printed matter or the like, which are adapted to be severed along the perforated lines 18 when being expelled from the board. As shown in Figure 6, successive slips are oppositely folded, the slip 23, for example, being folded oppositely from the next succeeding slip 24, the two slips being joined along the perforated line 18.

In the assembly of the game construction shown herein, the board 12 is first formed as shown in Figure 3. The several long sheets or strips of paper 17 comprising the individual slips are then folded and placed within the slots 16 of the board 12. It will be noted, as shown in Figure 2, that the folds of these slips are disposed in a plane normal to the plane of the board, in order to render the severing along the perforated lines 18 easier when the individual slips, such as the slip 23 or slip 24, are to be expelled. After the slips 17 have been placed in position, the cover boards or sheets 11 and 13 are glued or otherwise secured to the board 12, pressure being applied during this operation to compress the sheets 17 tightly within the slot 16. The outer surfaces of the cover sheets 11 and 13 may be provided with suitable advertising or display material, and with directions for the use of the game.

When the game is being played, the player removes the punch 20 from its receptacle 19, and forces the punch end 22 into the opening 14 or 14' upon either side of the board, as shown in Figure 2.

The punch point 22 forces the individual slip, such as a slip 23 or a slip 24, rearwardly with respect to the direction of movement of the punch, and tears the flaps 15 or 15' along their perforated margins, thus allowing expulsion of the slip. Due to the manner in which the slips are placed in the board 12, they are easily tearable along the perforations 18, and further, when expelled from the opening formed by the removal of flaps 15 or 15', fall out in a somewhat loosened and opened condition, whereby they may be easily unfolded and read.

It is thus apparent that we have provided a construction wherein assembly of the slips within the board is facilitated, and the slips may be inserted in a plurality of unit sheets, each sheet containing a relatively large number of individual slips. This eliminates the individual folding and inserting of each slip into a corresponding opening in the board, which has been the practice heretofore.

In addition, by the disposition of the folded sheets 17 in the slots 16 in the manner shown in Figures 2 and 3, when the slip is removed from the board it falls out in partly opened condition, facilitating its unfolding and reading.

While we have described and illustrated one preferred form of carrying out our invention, we do not intend to be limited thereto, but only as defined by the scope and spirit of the appended claims.

We claim:

1. In a game of the class described, an intermediate board provided with a plurality of parallel slots, cover sheets for opposite sides of said board having alternate punch openings and perforated flaps alined with said slots, the punch openings of one of said sheets being alined with the flaps of the other of said sheets, and tightly folded strips of paper containing spaced printed material separated by transverse perforations to provide a plurality of individual slips, said slips being placed in said slots and held between said cover sheets whereby insertion of a punch into a punch opening in one of said sheets will expel one of said individual slips by tearing of the opposed perforated flap in the other of said sheets, said slip tearing along adjacent perforations formed in said strips and being expelled through the flap opening.

2. A punch board comprising an intermediate board having a longitudinal slot therein, a strip of paper of the length of said slot and having spaced printed matter thereon, said strip being perforated transversely along the spaces between said spaced printed matter and folded into a narrow strip fitting within said slot, and cover sheets mounted upon opposite sides of said board, one of said sheets having a punch opening and the other of said sheets having a perforated flap of a width corresponding to said slot and a length corresponding to the distance between spaced perforations on said strip, said punch opening being alined with said slot and substantially centrally of said flap whereby insertion of a punch into said opening will tear said folded strip at adjacent perforations and said flap about its marginal periphery to expel an individual slip of paper through the flap opening.

3. A punch board comprising an intermediate board member having a plurality of vertically spaced parallelly extending longitudinal slots formed within the marginal edges thereof, a cor-

responding plurality of strips of paper of the length of said slots and adapted to be folded to be within the confines of said slots, each of said strips having spaced transverse perforations and being provided with individual printed matter therebetween, and cover sheets secured to opposite sides of said board, each of said cover sheets having alternate vertical rows of punch openings and perforated expulsion flaps spaced in alinement with said slots, the punch openings of one of said sheets being alined with the flaps of the other sheet.

4. As an article of manufacture, a punch board comprising a pair of outer sheets having vertically spaced rows of alternate punch openings and perforated flaps, an intermediate board therebetween having spaced longitudinally extending slots alined with said rows, strips of paper folded into said slots and having their folds extending normal to the plane of said board, each of said strips having spaced transverse perforations, the punch openings in one of said sheets being alined with the flaps of the other of said sheets whereby the insertion of a punch into one of said punch openings will tear the corresponding strip of paper between adjacent perforations and expel it through the corresponding flap opening by tearing said flap about its perforated edges, the folds of said torn strip causing it to partially open as it passes through the opening left by removal of said flap.

5. A punch board comprising an intermediate board having a longitudinal slot therein, a strip of paper the length of said slot transversely folded into said slot, said paper having spaced transverse perforations therein and the portions between said perforations being alternately oppositely folded, cover sheets for opposite sides of said board having alternate punch openings and perforated flaps, the punch openings of one sheet being alined with the flap openings of the other sheet, and a recess formed in said board between said cover sheets for receiving a punch member.

6. A punch board comprising an intermediate board having a longitudinal slot therein, folded slips of paper disposed in said slot, and cover sheets for opposite sides of said board having alternate punch openings and perforated flaps alined with said slot, the punch openings of one sheet being alined with the flap openings of the other sheet.

7. A punch board comprising a body portion, paper slips disposed within said body portion, cover sheets for opposite sides of said body portion having punch openings and perforated flaps disposed in alternate alinement whereby a portion of said slips are punched from one side of said board and the remaining slips from the opposite side of said board.

8. In a game of class described, an intermediate board having a longitudinal slot therein, a plurality of folded slips of paper disposed in said slot, cover sheets mounted upon opposite sides of said board and having perforated flaps and punch openings alined with said slips of paper, said perforated flaps being of a size corresponding to the size of one of said folded slips whereby insertion of a punch into one of said punch openings will expel a single paper slip through the perforated flap opposite said punch opening.

9. In a punch board, a body having a series of longitudinal slots, folded slips of paper inserted into said slots with the folds of the paper parallel to the length of the slot, and cover sheets for opposite sides of said body having alternate punch openings and perforated flaps in alinement with said slips of paper whereby a punch inserted into one of said punch openings will expel an individual slip of paper through the perforated flap of the other cover sheet.

10. In combination, a longitudinally slotted intermediate board, slips of paper carried thereby, and cover sheets for opposite sides of said board having alternate punch openings and perforated flaps in opposed alinement with said slips of paper.

ARTHUR M. BARRETT.
EDGAR H. WOLFE.