June 20, 1950 L. B. GODA 2,512,542

SPRAYING MECHANISM

Filed Nov. 6, 1947

Fig. 1.

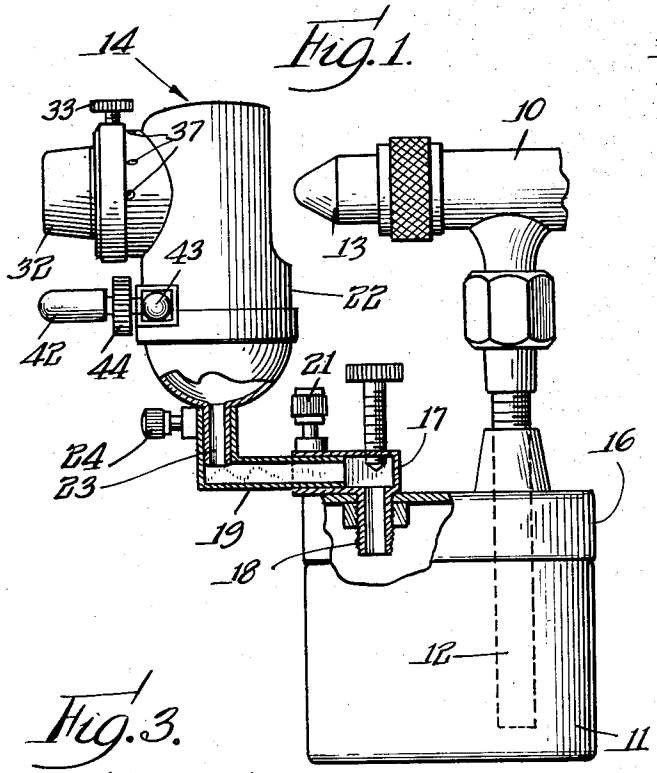

Fig. 2.

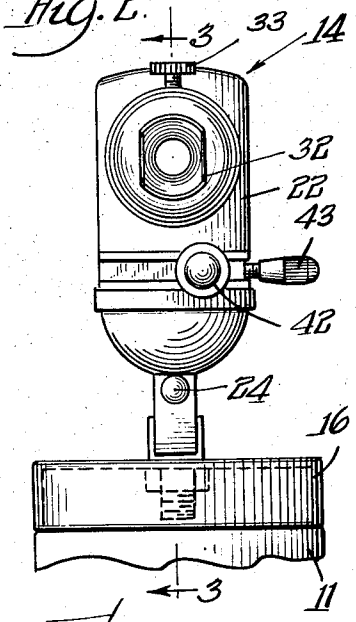

Fig. 3.

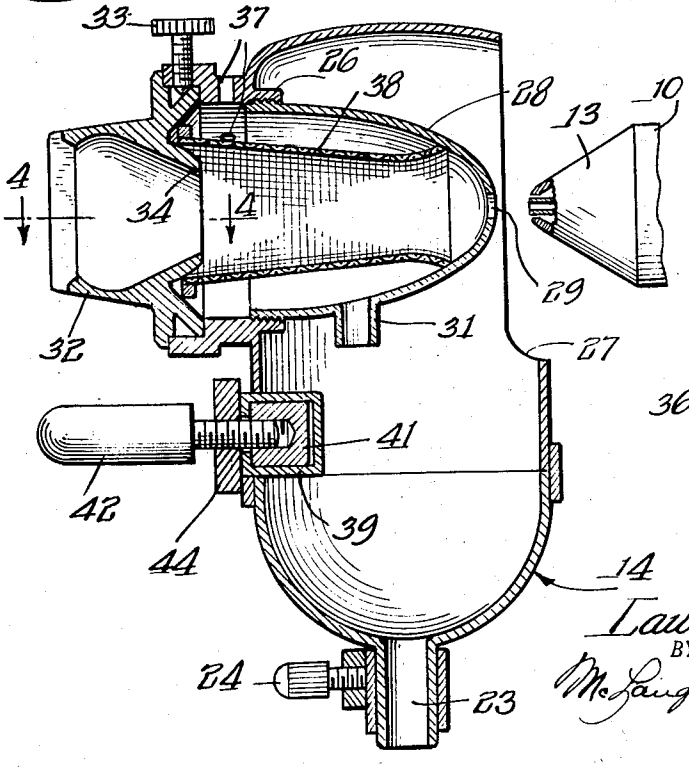

Fig. 5.

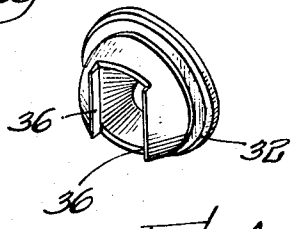

Fig. 4.

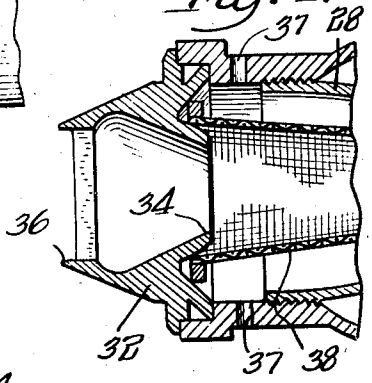

INVENTOR.

Lawrence B. Goda

BY

McLaughlen & Wallenstein

Attys.

Patented June 20, 1950

2,512,542

UNITED STATES PATENT OFFICE

2,512,542

SPRAYING MECHANISM

Lawrence B. Goda, Chicago, Ill.

Application November 6, 1947, Serial No. 784,370

5 Claims. (Cl. 91—45)

1

My invention relates to spray devices and more in particular to a device for controlling the spray from the usual spray gun employed in painting and the like.

In my prior application, which issued as Patent No. 2,440,084, on April 20, 1948, I disclosed a spray device particularly adapted for lithographic work. In such spray device, I provided a cone with an aperture at its tip so constructed and arranged that the proportion of spray passing the orifice could be controlled and the remaining portion returned to the paint reservoir. I was also able to control the character of the spray passing the orifice to obtain the different effects desired, in lithographic work. I have now found that by further development of the orifice arrangement, and particularly by the provision of a plurality of orifices having a particular relationship to the spray, I am able to produce a very sharp line for striping and similar work and at the same time control very accurately the amount and disposition of the paint as applied over the sprayed surface. Heretofore, methods proposed for producing a sharp edged stripe have been unsatisfactory when such methods depended upon control of the spray by the spray device itself. So far as I know the only commercially successful means for striping is by use of masking tape and the like, and the problem of controlling the effluent is such that attempts to reuse masking devices, as by the use of stencils and the like, have not been successful where it was necessary to produce a finished result without blotting.

The principal object of my invention is the provision of an improved spray device and method for controlling the spray such as discussed hereinabove.

In the drawing, I show a preferred embodiment of the invention in which—

Fig. 1 is a fragmentary elevational view partly in section showing the control mechanism associated with the spray gun and reservoir for paint;

Fig. 2 is an elevational view looking at the left hand side of Fig. 1;

Fig. 3 is a slightly enlarged vertical sectional view taken on the line 3—3 of Fig. 2;

Fig. 4 is a fragmentary sectional view taken on the line 4—4 of Fig. 3; and

Fig. 5 is a perspective view of a masking housing forming a part of the device.

Referring now to the drawings, I show a conventional type of spray gun 10 which, by means of suitably controlled air connections, withdraws paint from a reservoir 11 through a pipe 12 and

2

delivers it in spray form admixed with air through a nozzle 13. The device heretofore described is of usual conventional form and may take various forms, all well known in the spray industry. Supported in front of the nozzle 13, I provide a spray control device indicated generally by the reference character 14 which spray control device may take various forms providing the essential characteristics described hereinbelow are maintained.

In the form shown, I secure to a cover 16 of the reservoir a square pipe 17 having a discharge outlet 18 to the reservoir 11. Telescoped within the square pipe 17 is a square elbow 19, a screw 21 being provided to releasably secure it within the square pipe 17. A hollow shell 22 has a hollow mounting stem 23 which extends into the upstanding open end of the elbow 19 and is held in position by screw 24. The spray controlling mechanism is housed within the hollow shell 22.

Screwed within a threaded boss 26 on that wall of the shell opposite the nozzle, and also opposite a relatively wide opening 27 is a generally conical shell 28 having an apex orifice 29. The apex orifice 29 is aligned with the center of the spray from the nozzle 13 so that a portion of that spray passes the apex orifice 29 and a portion strikes the outside of the generally conical shell 28 and is thus prevented from passing through the orifice. It will thus be seen that I use the term "conical" in a general sense to define a construction which can have the desired effect, and such structure may have flat, rounded, hyperbolic, or circular sides, providing they diverge from the orifice. I may, therefore, refer to this portion of the device as a diverging centrally apertured separator which may have orifices of various sizes as will be made clear when the operation of the device is explained. Such portion of the spray as does not pass the orifice 29 flows by gravity through the hollow mounting stem 23 and thence to the reservoir 11. There is a tendency for some of the spray to accumulate on the inside of the generally conical member 28 and this portion is delivered to the hollow shell and thence to the reservoir through the drain 31.

In front of the diverging separator, the boss 26 is slightly enlarged to receive a masking housing 32, the shape of which is particularly shown in Fig. 5. The masking housing has an annular channel for the receipt of a fastening screw 33 so that it may be secured at any position to which it is rotated. The masking housing has a gen-

erally conical portion 34 in the nature of a diverging spray separator, the function of which will be described later. The exterior open side of the masking housing has horizontal side guards 36, these guards being spaced a distance approximately equal to the diameter of the spray at this point. The masking housing is slightly recessed as shown so that any slight amount of paint which may accumulate on the inside thereof will be prevented from discharging as a solid body, thereby producing a blob or blot and marring the uniformity of the sprayed surface.

The important problem in control of a spray is to maintain a uniform distribution of the spray substantially regardless of the length of time that the device is in operation. I have found that this involves control of air currents and preventing gradual accumulation of paint at points where unintended dislodgment and discharge can take place. It will be noted that the orifice 29 is almost at the exterior of the opening 27 in the shell and the parts are so positioned that a swirling of air will not occur but the paint will be carried aawy from the orifice 29 at the exterior of the diverging separator, and the air from which the paint has been removed easily passes out of the relatively large opening 27. Ports 37 at the opposite side of the diverging separator permit the release of such pressure as may tend to build up between the orifices 29 and 34, and the air which escapes here is also free of paint. This freedom of paint is in part brought about by the introduction of a screen 38 which picks up any stray paint particles.

In using the device of my invention, the side guards 36 may be placed very close to or against a surface to be striped, and to control the straightness of the line desired, I provide a guard such as shown. A square channel 39 has a slider 41 into the front and end of which guide elements 42 and 43 are screwed. A fastening nut 44 will retain the slider 41 in any position to which it is adjusted. Thus the guide elements 42 and 43 may be extended, retracted, or, in short, brought to any front or side position, respectively, which may be essential to following a guide such as a straight edge, a wall, a window sill, or any protuberance which can be used to position a stripe.

The orifice 29, orifice 34 and guards 36 are all predetermined in accordance with the width of the spray desired. They are so dimensioned that they frame approximately the outside of the normal cone-shaped spray and are so positioned that they will remove the outside eddying portion of the spray. To produce a half-inch stripe, for example, the guides 36 are ½ inch apart, the orifice 34 is ⅜ inch in diameter and the orifice 29 is approximately $\frac{3}{32}$ inch in diameter. These figures are illustrative of dimensions required when the longitudinal spacing is approximately that shown in the drawing. When a larger or smaller stripe is desired, both the member 28 and the member 32 are removed and replaced with members having orifices of the dimensions required. I have, for example, used an orifice as small as 1/32 inch at 29 for a small stripe as well as orifices of $\frac{1}{16}$ inch and ⅛ inch. The orifices 34 and 32 are correspondingly modified as explained. While I have shown the members 32 and 28 as separate parts, those skilled in the art will understand that this is for convenience in manufacture, and, of course, it would be possible to have a single part so that the relationship of the orifices to each other is maintained.

Assuming that it has been determined what

size line is wanted and the device has been set up ready for operation, it is only necessary to operate the spray gun and move the guards 36 parallel to the line being drawn. It is, of course, not essential that these guards be parallel but I have found that this is a convenience in operation and removes the last possibility, because of slightly faulty adjustment or the interposition of factors which cannot be accounted for, of depositing traces of spray outside the margin of the intended line. Such slight amount of paint as may be removed from the side of the spray at this point will be trapped on the inside of the masking housing and can be removed suitably with a cloth. Generally, however, long operation is possible without the need of cleaning.

What I claim as new and desire to protect by Letters Patent of the United States is:

1. The combination comprising a spray nozzle, a hollow shell supported in front of the spray nozzle, the shell being substantially closed except for openings provided along the path of the spray, an apertured spray diverging device within the shell with its said aperture adjacent the exterior of the shell, a masking housing supported in said shell opening furtherest removed from the spray nozzle, said masking housing having a cone-like portion projecting toward the spray with an orifice larger than the first-mentioned orifice.

2. The combination comprising a spray nozzle, a hollow shell supported in front of the spray nozzle, the shell being substantially closed except for openings provided along the path of the spray, an apertured diverging spray separating device within the shell with its said aperture adjacent the exterior of the shell, a masking housing supported in said shell opening furtherest removed from the spray nozzle, said masking housing having a cone-like portion projecting toward the spray with an orifice larger than the first-mentioned orifice, and a pair of parallel side guards carried by the housing and spaced a greater distance from each other than the diameter of the second-mentioned orifice, said side guards positioned to engage a work surface and define the limits of a stripe.

3. The combination comprising a spray nozzle, a hollow shell supported in front of the spray nozzle, the shell being substantially closed except for openings provided along the path of the spray, an apertured diverging spray separating device within the shell with its said aperture adjacent the exterior of the shell, and a masking housing supported in said shell opening furtherest removed from the spray nozzle, said masking housing having a cone-like portion projecting toward the spray with an orifice larger than the first-mentioned orifice, said separating device having side ports for passing air and preventing building up of air pressure in the shell and between the said orifices.

4. A spray device particularly adapted for striping, comprising in combination, a spray nozzle, a shell support having an opening adjacent the said spray nozzle, a conical shell supported in said shell support with its apex at said opening adjacent the spray nozzle, the said apex being apertured to pass a substantial portion of the spray in the form of a cone, and a masking housing supported in the base portion of the conical shell with a generally conical apertured portion projecting into the shell so as to trap an outside portion of the spray, said conical shell having a drain to pass trapped liquid to said shell

support, and said shell support having a bottom drain.

5. A spray device particularly adapted for striping, comprising in combination, a spray nozzle, a shell support having an opening adjacent the said spray nozzle, a conical shell supported in said shell support with its apex at said opening adjacent the spray nozzle, the said apex being apertured to pass a substantial portion of the spray in the form of a cone, a masking housing supported in the base portion of the conical shell with a generally conical apertured portion projecting into the shell so as to trap an outside portion of the spray, said conical shell having a drain to pass trapped liquid to said shell support, said shell support having a bottom drain, and said masking housing having an exterior aperture with flat sides forming guides, each said aperture along the path of the spray being larger than its predecessor so as to trap a portion of the exterior of the spray, and form a sharp outline between said guides.

LAWRENCE B. GODA.

REFERENCES CITED

The following references are of record in the file of this patent:

UNITED STATES PATENTS

Number	Name	Date
1,828,463	Hammers	Oct. 20, 1931
1,881,587	Hopkins et al.	Oct. 11, 1932
2,035,677	Steinke	Mar. 31, 1936
2,440,084	Goda	Apr. 20, 1948