June 18, 1935. E. A. BALZ 2,005,410

FRUIT JAR OPENER AND TIGHTENER

Filed April 9, 1934

Fig. 1.

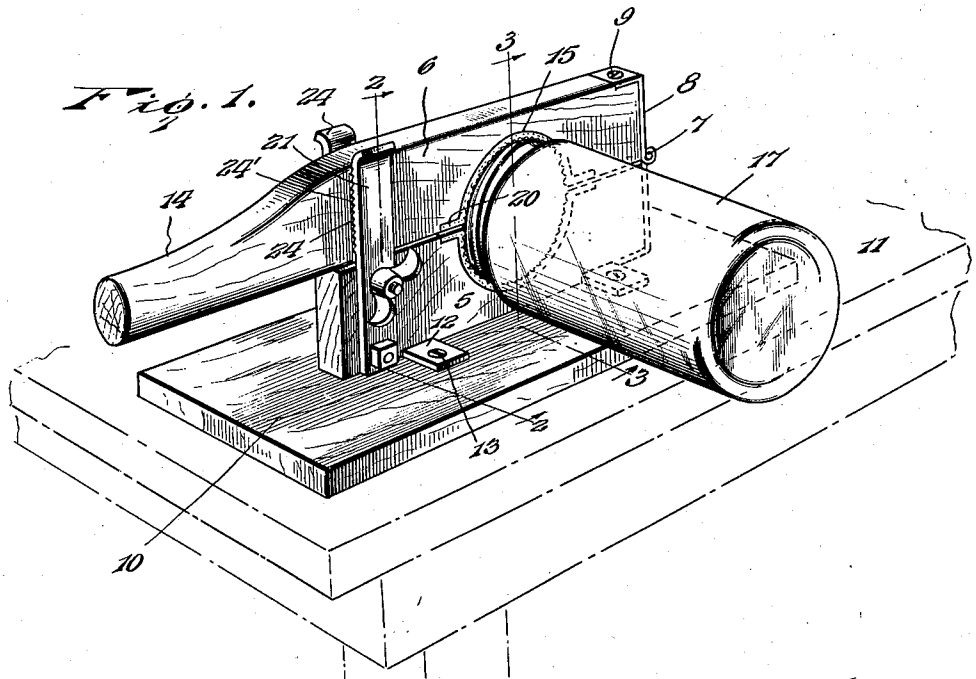

Fig. 2.

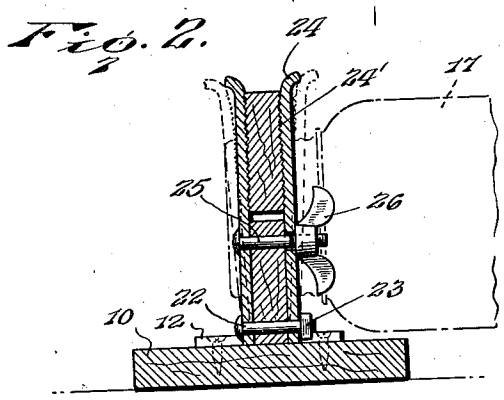

Fig. 3.

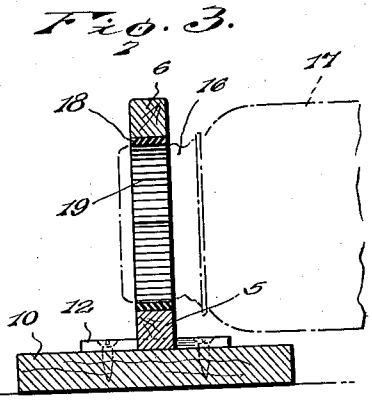

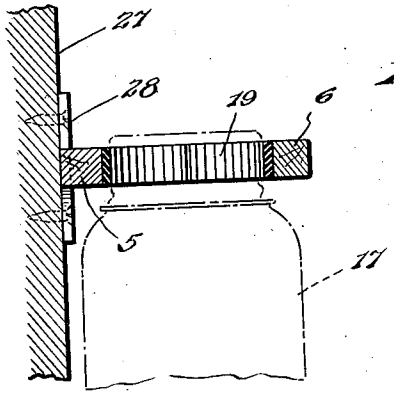

Fig. 4.

Inventor

Emil A. Balz.

By Lacey & Lacey, Attorneys

Patented June 18, 1935

2,005,410

UNITED STATES PATENT OFFICE

2,005,410

FRUIT JAR OPENER AND TIGHTENER

Emil A. Balz, Athens, Wis.

Application April 9, 1934, Serial No. 719,802

5 Claims. (Cl. 81—3.3)

This invention relates to fruit jar clamps or holders and has for its object to provide a comparatively simple and thoroughly efficient device of this character adapted to rest on a table or other suitable support and by means of which the screw cap of a fruit jar or similar container may be tightened after the jar has been filled, or said cap released to permit discharge of the contents of the jar.

A further object of the invention is to provide a clamp or holder including relatively stationary and movable jaws having coacting seating recesses adapted to receive the screw cap of the jar and firmly hold the same while the body of the jar is rotated to tighten or loosen the cap, one of said jaws being movable laterally to open position to facilitate removal of the jar from the holder.

A further object is to mount the clamp or holder on a portable supporting base so that the holder may be conveniently moved thereon from place to place, means being provided for guiding the movable jaw in its movement towards and away from the stationary jaw and means for clamping said movable jaw in closed position.

A still further object of the invention is generally to improve this class of devices so as to increase their utility, durability and efficiency.

In the accompanying drawing forming a part of this specification and wherein like numerals of reference indicate corresponding parts in all the figures of the drawing:

Figure 1 is a perspective view of a jar clamp or holder embodying the present invention.

Figure 2 is a vertical sectional view taken on the line 2—2 of Figure 1.

Figure 3 is a similar view taken on the line 3—3 of Figure 1.

Figure 4 is a detail vertical sectional view showing the clamp supported on a wall.

The improved jar clamp or holder, forming the subject-matter of the present invention, comprises relatively stationary and movable jaws 5 and 6 having their inner ends pivotally mounted at 7 by a strap hinge 8 which entirely covers the ends of the jaws so as to house and protect the same, the opposite ends of the strap hinge being countersunk in the adjacent longitudinal edges of said jaws and secured thereto by screws or similar fastening devices 9. The stationary jaw 5 is mounted upon a flat supporting base 10 so as to permit the holder to rest on a table or other suitable support, indicated at 11, and said stationary jaw is rigidly secured to the supporting base 10 by means of attaching clips 12 countersunk in the lower longitudinal edge of the jaw 5 and having their opposite ends projecting beyond the side walls of the jaw and secured to the base by screws 13 or similar fastening devices. The jaws 5 and 6 are each preferably formed of a single length of material arranged on edge and disposed in vertical alinement with each other, the free end of the movable jaw 6 being extended longitudinally beyond the adjacent end of the stationary jaw 5 and inclined or tapered to form an operating handle 14. The inner faces of the jaws 5 and 6 are provided with seating recesses 15 adapted to receive the screw cap 16 of an ordinary Mason jar or similar container, indicated at 17. The walls of the recesses 15 are lined with strips of rubber or other yieldable material 18 and these yieldable strips are preferably provided with transverse serrations 19 in order to obtain a good grip on the screw cap and thus hold the same firmly when rotating the jar to tighten or release the cap. The opposite ends of the yieldable strips 15 are preferably countersunk in the adjacent longitudinal edges of the clamping jaws, as indicated at 20, so as not to offer any surface obstructions and thus permit the movable jaw to contact with the stationary jaw when the jaws are in operative position. As a means for guiding the movable jaw 6 in its movement toward and away from the stationary jaw, there are provided spaced guide strips 21, the lower ends of which are loosely connected with the stationary jaw near the lower end of said jaw by a bolt 22 which extends through the strips and stationary jaw for engagement with a nut 23, as best shown in Figure 2 of the drawing. The upper ends of the guide strips 21 are curved or deflected laterally at 24 so as to assist in guiding the movable jaw between the strips 21 when the movable jaw is swung downwardly to operative position, and the inner faces of the guide strips are preferably serrated or roughened at 24' to assist in gripping and holding the movable jaw when in closed or locked position. Extending through the guide strips and the stationary jaw 5 is a clamping bolt 25 having its outer end threaded for engagement with a wing nut 26 so that after the movable jaw is swung downwardly to operative position, said jaw may be securely clamped in said position by tightening said wing nut.

In using the device, the movable jaw 6 is swung laterally to open position and the screw cap 16 of the fruit jar inserted in the seating recesses 15, after which the movable jaw is swung down-

wardly to closed position and the wing nut 26 tightened to hold said jaw closed. As the screw cap 16 is thus firmly held between the gripping jaws, the release of the cap on the jar may be effected by merely rotating the body of the jar in an obvious manner. It will, of course, be understood that as soon as the cap is loosened, the jar will be immediately removed from the holder and placed in an upright position on the table so as to prevent spilling of the contents thereof. In order to tighten the cap, it is merely necessary to rotate the jar in the reverse direction, as will be readily understood. Inasmuch as the clamp or holder is mounted on a supporting base 10, the clamp may be readily moved from place to place as requirements demand. If desired, however, the supporting base may be dispensed with and the clamp or holder supported in a horizontal position from a wall 27 and in which event the attaching brackets 12 will be secured directly to the wall by screws or similar fastening devices 28. In other words, the construction of the clamp or holder is such that it may be used for loosening or tightening the caps of fruit jars or other containers either when the jar is supported in a vertical position or in a horizontal position, as the clamping action of the jaws is the same in either case.

If desired, the supporting base or board may be dispensed with and the jar holder secured in position on a table or other support by a screw clamp of standard construction.

It will, of course, be understood that the devices may be made in different sizes and shapes and constructed of any suitable material without departing from the spirit of the invention.

Having thus described the invention, I claim:

1. A device of the class described comprising pivotally connected relatively stationary and movable jaws provided with coacting seating recesses adapted to receive the screw cap of a container, the movable jaw being extended longitudinally beyond the stationary jaw to form an operating handle, spaced guide strips secured to the stationary jaw and adapted to receive the movable jaw, and means extending through the stationary jaw and guide strips for clamping said guide strips in contact with the movable jaw.

2. A device of the class described comprising a supporting base, vertically disposed relatively stationary and movable jaws mounted on the base and provided with coacting seating recesses adapted to receive the screw cap of a container, spaced guide strips secured to one of the jaws for guiding the movable jaw when swung in a vertical plane to closed position, and means extending through the guide strips for clamping said jaw in closed position.

3. A device of the class described comprising a supporting base, a stationary jaw secured to the base, a movable jaw pivotally connected with the stationary jaw, the confronting edges of said jaws being provided with seating recesses adapted to receive the screw cap of a fruit jar and one of said jaws being extended longitudinally beyond the other to form an operating handle, guide strips loosely mounted on the stationary jaw and having their upper ends spaced apart and their terminals curved laterally, and a clamping bolt extending through said guide strips and stationary jaw for clamping the guide strips against the movable jaw when the latter is in closed position.

4. A device of the class described comprising a supporting base, pivotally connected relatively movable and stationary jaws mounted on the base, attaching brackets fitted in the lower edge of the stationary jaw and secured to the supporting base, the confronting longitudinal edges of the jaws being provided with coacting seating recesses adapted to receive the screw cap of a jar and one of the jaws being extended longitudinally beyond the other to form an operating handle, guide strips loosely mounted on the stationary jaw near the free end thereof and having their upper ends deflected laterally and their inner faces roughened, and a clamping screw extending through said guide strips and stationary jaw to cause the roughened portions of the strips to bite into the movable jaw when the latter is swung to closed position.

5. A device of the class described comprising a supporting base, a stationary jaw secured to the base, a movable jaw of greater length than the stationary jaw, a strap hinge forming a pivotal connection between said jaws and entirely covering the adjacent ends of the jaws, said jaws having their confronting longitudinal edges provided with semi-circular seats adapted to receive the screw cap of a jar, strips of yieldable material fitted to the seats and provided with roughened portions to grip said screw cap, guide strips pivotally connected with the side walls of the stationary jaw near one end thereof and having their upper ends spaced apart and deflected laterally to receive the movable jaw, a bolt extending through the guide strips and stationary jaw, and a wing nut threaded on the bolt for clamping the guide strips in engagement with said movable jaw.

EMIL A. BALZ. [L. S.]