Sept. 25, 1928. 1,685,382

J. STUART, 2D

METHOD OF BRIDGING THE CONNECTING WIRES OF ELECTRIC BLASTING CAPS

Original Filed Feb. 9, 1927

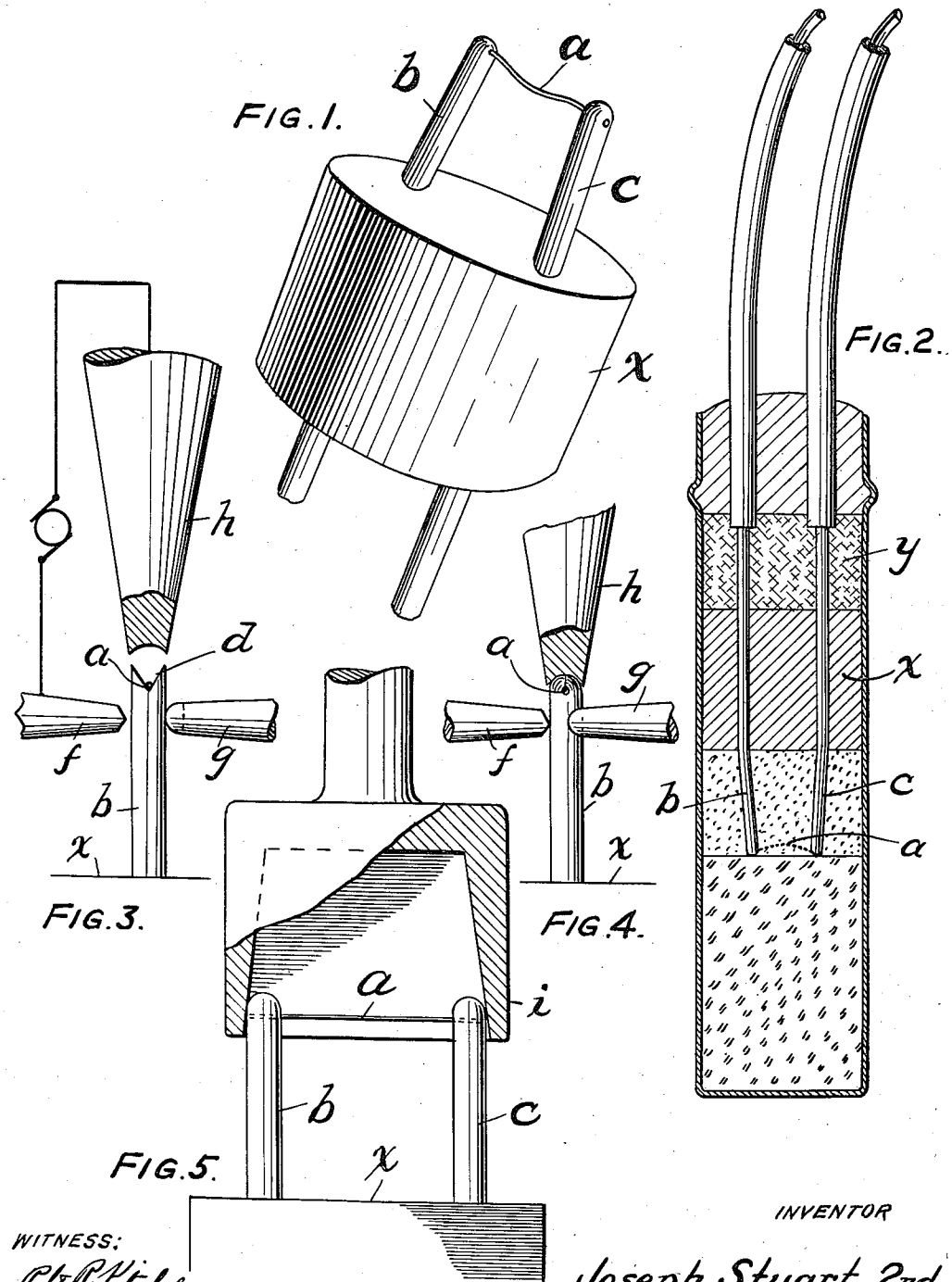

WITNESS:
Robt P Kitchel.

INVENTOR
Joseph Stuart, 2nd.
BY
Busser and Harding
ATTORNEYS.

Patented Sept. 25, 1928. 1,685,382

UNITED STATES PATENT OFFICE.

JOSEPH STUART, 2D, OF WILMINGTON, DELAWARE, ASSIGNOR TO HERCULES POWDER COMPANY, OF WILMINGTON, DELAWARE, A CORPORATION OF DELAWARE.

METHOD OF BRIDGING THE CONNECTING WIRES OF ELECTRIC BLASTING CAPS.

Original application filed February 9, 1927, Serial No. 166,853. Divided and this application filed April 23, 1927. Serial No. 185,951.

The object of my invention is to improve electric blasting caps by a new mode of securing the ends of the fusible bridge wire between the ends of the lead wires or conducting wires. These lead wires extend into the detonator of the blasting charge, their ends being spaced apart therein a definite distance by embedding the wires, near their extremities, in a plug of sulfur or other material.

The ends of the bridge wires are usually soldered to the ends of the conducting wires. It is known, also, to provide V-shaped notches in the ends of the conducting wires, lay the bridge wire (which is of very small diameter relative to that of a conducting wire) in these notches, and pour solder in the grooves so as to cover the ends of the bridge wires and hold them in position. This mode of securing the bridge wire is workable, but is not satisfactory.

My invention may best be understood by reference to the accompanying drawings, which show, somewhat diagrammatically, my improved electric detonating device as well as the series of steps by which it is produced and which embodies the process herein claimed.

Fig. 1 is a perspective view of the completed electric detonating device for the detonator of the blasting charge.

Fig. 2 is a longitudinal section through a complete detonator.

Fig. 3 is a view showing the end of one of the conducting wires with the bridge wire positioned relative thereto preparatory to securing them together.

Fig. 4 is a similar view showing the two wires secured together.

Fig. 5 is a view of a pair of conducting wires and the bridge wire spanning them preparatory to their final shaping.

The bridge wire *a*, which is of indefinite length, is fed in the direction of its length until one extremity thereof rests in the V-notch *d* (or any crotch of suitable shape) formed in the end of conducting wire *b*, the bridge wire thence extending into and beyond the similar notch *e* in the other conducting wire *c*. The two conducting wires *b* and *c* have been previously encased, near their ends, in a plug *x*.

The wire *b* is then clamped between a member *f*, which is a terminal piece connected with one pole of an electric circuit and preferably provided with a bevelled or pointed end, and a diametrically opposite member *g*, which should be insulated and is preferably provided with a grooved end for receiving and backing up wire *b*. At the same time a third member *h*, which is a terminal piece connected with the other pole of an electric circuit, is moved toward the end of the conducting wire in the direction of the latter's axis. The member *h* has in its end a concave recess which embraces the walls of the notch *d*. As the member *h* continues to move it upsets inwardly the walls of the notch *d*, as indicated in Fig. 4. At the same time the bridge wire *a* is welded to the wire *b* and as it is welded is surrounded and gripped by the metal of the conducting wire, being securely imbedded therein. Thereby the end of the bridge wire is both welded to, and encased by, the conducting wire, thus affording a very secure connection.

The bridge wire *a* is now cut beyond the other conducting wire *c*. Preferably it is cut flush with the outer face of the wire, so that it is of a length equal to the distance between wires *b* and *c* plus their diameters. The bridge wire is now welded to wire *c* in the same manner as it was welded to wire *b*.

A cup-shaped former *i* is now applied to the bridged conducting wires *b* and *c*. The inner diameter of the cup, at its rim, is slightly greater than the distance between wires *b* and *c* plus their diameters. The wall of the cup is of frusto-conical shape, converging toward its bottom. By moving the cup in the direction of the axes of the wires *b* and *c*, the wires are bent inward toward each other, as shown in Fig. 1, thereby bending the bridge wire into the shape of an arc or very shallow V, as shown in Fig. 1. Thereby breakage of the bridge wire, due to tension or contraction, is prevented.

The detonator *y*, shown in Fig. 2, need not be particularly described, as it may be of the usual construction or of any desired construction.

I have designed an automatic machine for feeding, welding and cutting the bridge wires and for upsetting the ends of the conducting wires, and have filed an application for patent for the machine (Serial No. 177,959, filed March 24, 1927). No automatic machine,

however, is required to practice the herein described process, nor is it necessary to utilize the particular tools or instrumentalities herein described, which are disclosed merely because they are found to be efficiently operative and to materially facilitate the execution of the process.

The herein described improved electrical primer for blasting caps is not herein claimed. It forms the subject-matter of an application filed February 9, 1927, Serial No. 166,853, of which the application for this patent is a division.

Having now fully described my invention, what I claim and desire to protect by Letters Patent is:

1. A method of securing the ends of a bridge wire to the ends of the spaced apart conducting wires of an electric blasting cap which comprises forming a notch in the end of a conducting wire, positioning the bridge wire in said notch, supporting the conducting wire, and upsetting the metal walls of the notch over the bridge wire while passing an electric current through the bridge wire and conducting wire, thereby both welding the bridge wire to, and encasing it in, the extremity of the conducting wire.

2. A method of securing the ends of a bridge wire to the ends of the spaced apart conducting wires of an electric blasting cap which comprises positioning the bridge wire on the end of a conducting wire, supporting the conducting wire on opposite sides, and passing through the metal of the conducting wire and the bridge wire an electric current adapted to weld the bridge wire to the conducting wire, and at the same time encasing the bridge wire in the metal of the conducting wire.

In testimony of which invention, I have hereunto set my hand, at Wilmington, Delaware, on this 19th day of April, 1927.

JOSEPH STUART, II.