April 15, 1947. W. H. COGHILL ET AL 2,418,821

PLURAL STAGE HYDRAULIC CLASSIFIER

Filed Dec. 18, 1944

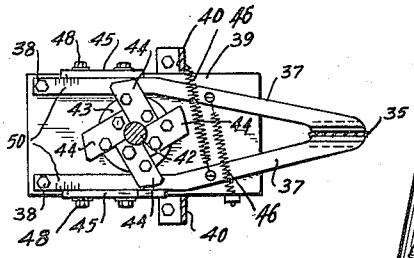

Fig. 5.

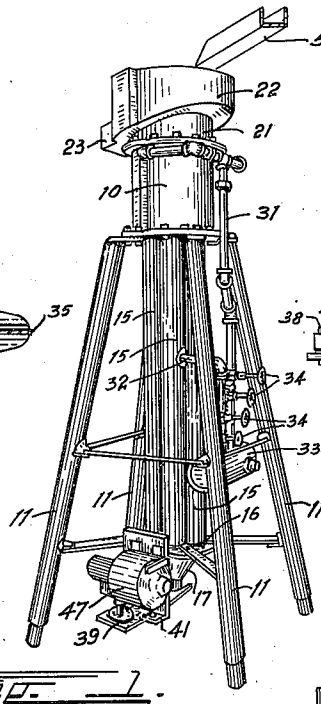

Fig. 1.

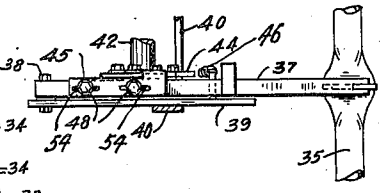

Fig. 6.

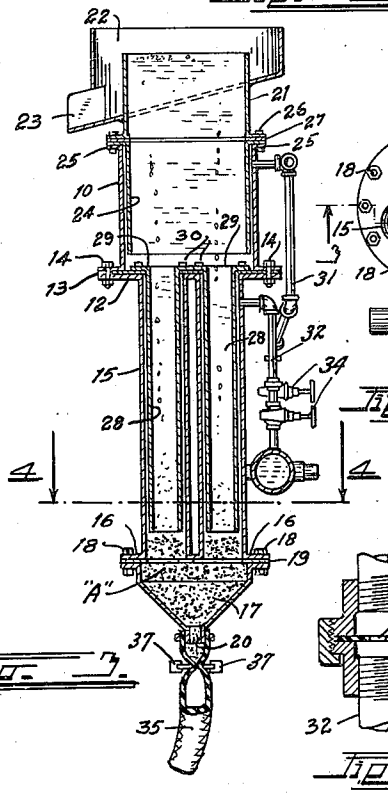

Fig. 3.

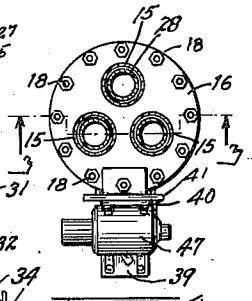

Fig. 4.

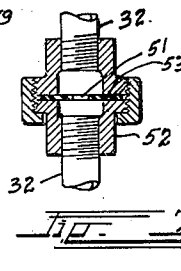

Fig. 7.

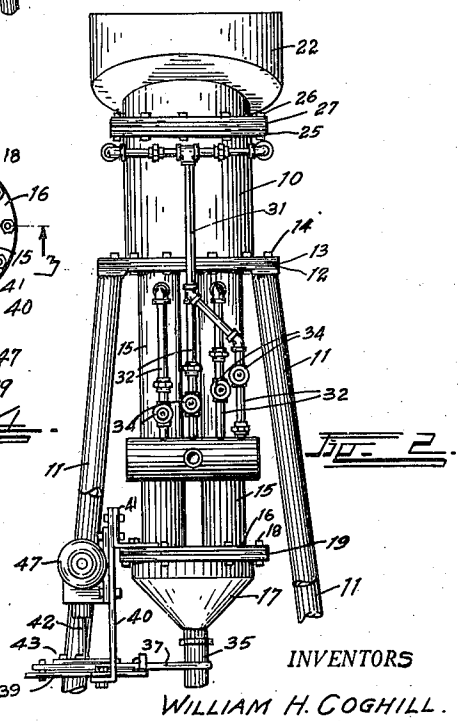

Fig. 2.

INVENTORS

WILLIAM H. COGHILL.

GLEN D. COE.

BY

ATTORNEY

Patented Apr. 15, 1947 2,418,821

# UNITED STATES PATENT OFFICE

2,418,821

## PLURAL STAGE HYDRAULIC CLASSIFIER

William Hawes Coghill and Glenn Dale Coe, Tuscaloosa, Ala., assignors to the Government of the United States, as represented by the Secretary of the Department of the Interior

Application December 18, 1944, Serial No. 568,742

4 Claims. (Cl. 209—158)

(Granted under the act of March 3, 1883, as amended April 30, 1928; 370 O. G. 757)

1

The invention described herein, if patented, may be manufactured and used by or for the Government for governmental purposes without the payment to us of any royalty thereon.

This invention relates to a hydraulic classifier, and has for its principal object the provision of a device of this character which will have an exceedingly high capacity and efficiency for a minimum amount of floor space.

Another object of the invention is to provide a hydraulic classifier with a unitary roughing chamber for rapidly making a rough preliminary or primary classification so that only a semi-finished product will be fed to the finishing columns so as to reduce the load on the latter and enable them to make a rapid and accurate classification of the semi-finished product without interference from the solids rejected in the primary classification.

Still another object of the invention is to so construct the device that an accurate and minute control may be had of the individual hydraulic columns at all times so that any desired classifications or zonal cuts may be obtained.

A further object is to so construct and use the classifier that the quiescent zone and bed in the final settling chamber will not be disrupted by the discharge of the spigot product.

A still further object is to provide a continuously operating spigot discharge device which can be regulated to accommodate any given rate of feed and which will so operate as not to create surges, suction currents, or other undesirable disturbances in the classifying columns or the settled bed which might contaminate or reduce the quality of the spigot product.

Other objects and advantages reside in the detail construction of the invention, which is designed for simplicity, economy, and efficiency. These will become more apparent from the following description.

In the following detailed description of the invention, reference is had to the accompanying drawing which forms a part hereof. Like numerals refer to like parts in all views of the drawing and throughout the description.

In the drawing:

Fig. 1 is a perspective view of the improved classifier illustrating it mounted on supporting legs for laboratory experimentation;

Fig. 2 is an enlarged side view thereof;

Fig. 3 is a vertical section through the classifier, taken on the line 3—3, Fig. 4;

Fig. 4 is a horizontal section taken on the line 4—4, Fig. 3;

2

Fig. 5 is an enlarged detail section taken on the line 5—5, illustrating a plan view of a spigot pincer employed in the device; and

Fig. 6 is a similarly enlarged side view of the spigot pincer.

Figure 7 is a section through the union in the supply pipe showing the use of an orifice pipe.

The improved classifier employs a roughing compartment 10 supported on any desired structural framework, such as legs 11. The bottom of the roughing compartment 10 is closed by an apertured bottom plate 12, covered with a suitable sealing gasket 13. An overflow sleeve 21 is bolted to a top flange surrounding the top of the roughing compartment 10. The sleeve 21 is surrounded by an overflow launder 22, having an inclined bottom leading to a discharge spout 23. The bottom plate is bolted to a bottom flange on the compartment 10 by means of suitable flange bolts 14. The bottom plate 12 is formed with a plurality of openings, three being shown, from each of which a finishing column 15 depends.

The finishing columns 15 are vertically elongated tubes of much smaller diameter than the diameter of the roughing compartment 10. All of the tubes terminate in a single bottom flange plate 16 which projects thereabout. A hopper-shaped collecting chamber 17 is bolted at its periphery to the flange plate 16 by means of suitable flange bolts 18, a sealing gasket 19 being interposed therebetween. The collecting chamber 17 terminates at its lowermost point in a spigot nipple 20 from which a resilient spigot hose 35 depends.

An inner jacket 24 is supported within the roughing compartment 10 by means of a top flange 25 formed on the jacket. The top flange 25 is clamped between co-acting flanges formed on the over-flow sleeve 21 and the roughing compartment 10 by means of clamps bolts 26, suitable sealing gaskets 27 being interposed therebetween. The inner jacket 24 is of slightly less diameter, and of less heighth, than the roughing compartment 10 so that it is separated uniformly from the inner wall of the latter, and so that it terminates a short distance above the bottom plate 12 therein.

Each of the finishing columns 15 is also provided with an inner jacket member 28. The latter inner jacket members are of less diameter and of less length than the finishing columns 15 and are supported from a peripheral flanges 29 formed on the jackets. The flanges 29 rest upon the sealing gasket 13 on the bottom plate 12, and are attached thereto by means of suitable cap screws

30. This spaces the inner jacket members 28 uniformly away from the inner walls of the finishing columns 15 and from the lower extremities of the latter.

Water is supplied to the roughing compartment 10 through oppositely positioned supply pipes 31. These pipes communicated through the wall of the roughing compartment 10, near the top and at opposite sides thereof, to the intervening space between the wall and the inner jacket 24.

Water is supplied to the finishing columns 15 through a second series of supply pipes 32. The pipes 32 communicate through the walls of the columns 15, at points well above the bottoms thereof, with the intervening spaces between walls and the inner jacket members 28. All of these supply pipes 31 and 32 lead from a common main feed header 33, and each is individually controlled by means of an individual control valve 34. The feed header is supplied with water under pressure from any suitable source. The pipe 32 is provided with a union 52 having a plate 53 provided with an orifice 51.

The flow of the spigot product through the hose 35 is automatically controlled by means of a pair of motor operated pincer jaws 37, there being one jaw positioned on each side of the hose 35. The jaws are hinged at their one extremity on hinge bolts 38, upon a base plate 39, and are constantly urged toward the hose by means of tension springs 46. The base plate 39 is supported in any suitable manner, such as by means of a bracket 40, from an angle bar 41 bolted to the flange plate 16.

The bracket 40 also supports a standard electric motor 47 preferably of the type having an inbuilt speed reducer. A drive shaft 42, driven from the speed reducer of the motor, rotates a cam disc 43 between the pincer jaws 37. The disc 43 carries a plurality of cam fingers 44, which, when the disc is rotated, contact adjustable cam plates 45 on the pincer jaws 37.

It can be readily seen that as the disc 37 rotates the opposite cam fingers 44 will swing into contact with the opposite cam plates 45 to force the jaws apart under the action of the springs 46. The interval that the jaws remain apart depends, of course, upon the length of time the fingers 44 remain in contact with the cam plates 45. This time interval can be preset to any desired interval by varying the position of the plates 45. The latter are secured to the pincer arms 37 by means of clamp screws 48 which pass through elongated holes 54 in the plates 45. By loosening the screws 48 the plates 45 can be moved to any desired position along the arms so as to remain in the path of the fingers for any desired interval. The arms 37 are provided with scales 50 by means of which the two arms can be accurately timed in unison.

*Operation*

It appears that in prior designs of classification columns the relation between the depth and the diameter of the columns has not been given the attention it deserves. Depth is necessary to give a sufficient period of retention and small diameter is necessary for staple teeter. With a large diameter column the teeter will not be uniform over the entire area. This instability is occasioned by the fact that relatively strong teeter functions over the areas of least resistance, and little or no teeter appears in the remainder of the column. This results in a contaminated spigot product and loss in the overflow. The finishing columns in this invention have a relatively small diameter so that any variations in the intensity of the agitation or teeter in the cross section of the column must necessarily be small. Capacity is gained in the present invention by increasing the length of the column and not by increasing the diameter thereof, as in the usual classifier.

Another factor which tends to interfere with the stability of the usual column is the drawing off of the heavies or spigot product, which tends to create suction cones, whirl-pools and eddy currents in the lower strata which draw down undesirable solids and slimes into and through the bed to the spigot. This is avoided in the present invention by maintaining a relatively deep bed and continuously removing this bed by a continuous series of short interval openings of the spigot as will become apparent from the following description of the operation.

The material to be classified is continuously fed into the roughing compartment 10 from a suitable feed chute 50. It is first subjected to a rough classifying action in the roughing compartment 10 under the influence of a counter-current of water flowing upwardly therein from the lower edge of the inner jacket 24. The jacket breaks up the incoming current and reduces its velocity by distributing it over the entire wall of the compartment so that it will enter uniformly about the entire chamber, thus avoiding geysering effects. Absolute stability is not so essential, however, in the roughing compartment since only a rough classification, to reduce the bulk of solids before delivery to the finishing columns, is expected.

The heavier solids then gravitate into the finishing columns where the diameter is reduced and the depth and stability is increased for the more accurate final classification. In these columns the water is distributed uniformly and completely about the columns by the inner jacket 28. Due to the small diameter of the columns and to the fact that the water is entering uniformly about the entire circumference, a smooth uniform counter-current is attained at all points.

The currents in both the roughing compartment 10 and the finishing columns 15 can be accurately controlled by the operator through manipulation of the valves 34 to obtain any desired preliminary and final classification.

The motor 47 operates continuously during the operation of the classifier. The plates 45 on the pincer arms 37 are regulated, relative to the valves 34 and the incoming material feed, to build up and maintain a deep bed of spigot product in the collecting chamber 17 as indicated at "A" in Fig. 3.

The motor causes the jaws of the pincer arms to alternately close and open the hose 35, the length of the open period being preset on the pincer arms within a maximum limit. The operation of the pincer arms is best within the range 12 and 24 openings per minute, and the maximum open period is never sufficient to lower the bed so as to allow slime carrying water to discharge from the hose 35. In fact, with proper regulation, the mean level of the bed remains stationary as the small amount drawn off at each brief opening is replaced before the next opening. Therefore, the usual vortex, swirls or spiraling currents accompanying spigot discharges are entirely eliminated and the settled material in the bed is not disturbed after it comes to rest.

It will be noted that the counter-current flows of the spigot material and water are uniformly effective from the surface of the final bed completely through the classifier to the lip of the overflow sleeve 21.

Since the inner jackets 28 terminate well above the collecting chamber 17, and since the chamber itself is of greater area than the total area of the finishing columns 16, a completely quiescent bedding zone is maintained above the spigot discharge. The final result is a high capacity, accurate, non-choking, uniform-delivery classifier.

When the classifier is permanently installed on a uniform type of material feed it has been found desirable to provide a permanent setting for the hydraulic flows so that a uniform head is obtained in all columns without requiring valve regulation. This is accomplished by placing unions 52 in the pipes feeding the various hydraulic columns. A meter disc 53 is placed in the union having an aperture 51 which has been determined by test to be of the proper one for the given conditions. The discs in all three of the pipes 32 have exactly the same aperture so that the hydraulic columns are balanced. Regulation of the valves 34 is unnecessary. They are all full open during operation and fully closed when not in operation.

It will be noted that the pincer jaws 37 are closed by the action of the springs 46 and not by the motor 47. Therefore, should a rock or other foreign materials be in the tube no damage can result since the pincer jaws will simply be held open.

The spigot from the usual classifier is relatively small in order to prevent complete discharge of the bed. This small discharge orifice is subject to clogging from rocks and other foreign materials. In this improved classifier, however, the discharge is exceedingly large, since it does not remain open. Therefore, no interference is encountered from clogging of the discharge.

The material discharging from the spigot tube 35 is almost a solid mass, the only water being that filling the interstices between the particles. This is a direct contrast to the usual watery discharge of the prior classifiers, which draw their spigot product through a "suck hole" in the bed.

While a specific form of the improvement has been described and illustrated herein, it is desired to be understood that the same may be varied, within the scope of the appended claims, without departing from the spirit of the invention.

Having thus described the invention, what is claimed and desired secured by Letters Patent is:

1. A hydraulic classifier comprising: a cylindrical roughing compartment; a flat bottom in said roughing compartment; an inner jacket in said roughing compartment sealed to the upper periphery thereof and positioned in spaced relation to the cylindrical wall and flat bottom thereof; an overflow receptacle surrounding the upper extremity of said inner jacket; means for introducing water into the space between said jacket and said wall; a plurality of spaced-apart cylindrical finishing columns opening through the bottom of said compartment and extending downwardly therefrom, said columns having a greater depth than said compartment; an inner jacket in each column sealed to the wall at the top thereof and positioned in uniform spaced relation to the wall thereof, said tubes terminating above the bottom of said columns; means for introducing water between said tubes and the walls of said columns; a collecting chamber, all of said columns opening to said chamber at their lower extremities and being sealed thereto; and means for discharging collected material from the bottom of said chamber.



2. A hydraulic classifier comprising: a cylindrical roughing compartment; a flat bottom in said roughing compartment; an inner jacket in said roughing compartment sealed to the upper periphery thereof and positioned in spaced relation to the cylindrical wall and flat bottom thereof; an overflow receptacle surrounding the upper extremity of said inner jacket; means for introducing water into the space between said jacket and said wall; a plurality of spaced-apart cylindrical finishing columns opening through the bottom of said compartment and extending downwardly therefrom, said columns having a greater depth than said compartment; an inner jacket in each column sealed to the wall at the top thereof and positioned in uniform spaced relation to the wall thereof, said tubes terminating above the bottom of said columns; means for introducing water between said tubes and the walls of said columns; a collecting chamber, all of said columns opening to said chamber at their lower extremities and being sealed thereto; means for discharging collected material from the bottom of said chamber; and an independent control means for the water entering each column and the water entering between said jacket and the wall of said roughing compartment.

3. A hydraulic classifier comprising: a cylindrical roughing compartment; a flat bottom in said roughing compartment; an inner jacket in said roughing compartment sealed to the upper periphery thereof and positioned in spaced relation to the cylindrical wall and flat bottom thereof; an overflow receptacle surrounding the upper extremity of said inner jacket; means for introducing water into the space between said jacket and said wall; a plurality of spaced-apart cylindrical finishing columns opening through the bottom of said compartment and extending downwardly therefrom, said columns having a greater depth than said compartment; an inner jacket in each column sealed to the wall at the top thereof and positioned in uniform spaced relation to the wall thereof, said tubes terminating above the bottom of said columns; means for introducing water between said tubes and the walls of said columns; a collecting chamber, all of said columns opening to said chamber at their lower extremities and being sealed thereto; means for discharging collected material from the bottom of said chamber; and a flange surrounding the upper extremity of the inner jacket in each column, said flanges resting on and being secured to the bottom of said roughing chamber.

4. A hydraulic classifier comprising: a cylindrical roughing compartment; a flat bottom in said roughing compartment; an inner jacket in said roughing compartment sealed to the upper periphery thereof and positioned in spaced relation to the cylindrical wall and flat bottom thereof; an overflow receptacle surrounding the upper extremity of said inner jacket; means for introducing water into the space between said jacket and said wall; a plurality of spaced-apart cylindrical finishing columns opening through the bottom of said compartment and extending downwardly therefrom, said columns having a greater depth than said compartment; an inner jacket in each column sealed to the wall at the top thereof and positioned in uniform spaced relation to the wall thereof, said tubes terminating above the bottom of said columns; means for introducing water between said tubes and the walls of said columns; a flange plate secured to the lower extremities of all of said columns, the latter open-

ing through said plate; a collecting chamber sealed to and depending from said flange plate; a hopper-like bottom in said collecting chamber; a discharge from said bottom; and means for opening and closing said discharge at regular intervals.

WILLIAM HAWES COGHILL.
GLENN DALE COE.

## REFERENCES CITED

The following references are of record in the file of this patent:



UNITED STATES PATENTS


| Number | Name | Date |
|---|---|---|
| 964,261 | Janney | July 12, 1910 |
| 1,705,351 | Andrews | Mar. 12, 1929 |
| 1,476,250 | Handy | Dec. 4, 1923 |
| 2,325,881 | Robertson | Aug. 3, 1943 |
| 2,348,402 | Miller | May 9, 1944 |
| 2,371,434 | Eppler | Mar. 13, 1945 |
| 2,183,835 | Foulke | Dec. 19, 1939 |
| 2,168,207 | Haultain | Aug. 1, 1939 |
| 1,495,724 | Blake | May 27, 1924 |
| 2,334,683 | Smith | Nov. 16, 1943 |