Nov. 30, 1937. M. McD. PICKLE ET AL 2,100,597

COMBINED CHAIR AND DESK

Filed Sept. 12, 1935 4 Sheets-Sheet 1

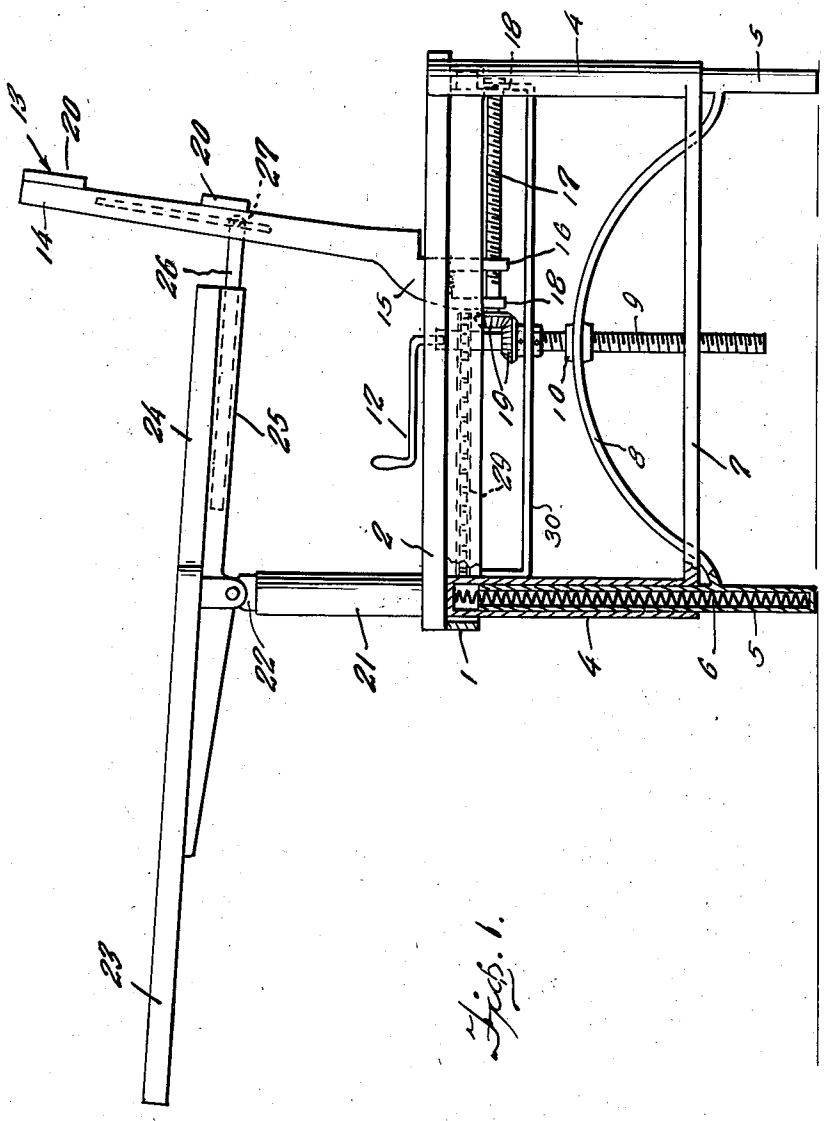

Fig. 1.

Inventors

Marion McD. Pickle

Daniel E. Parsons

By Clarence A. O'Brien

Attorney

Nov. 30, 1937. M. McD. PICKLE ET AL 2,100,597

COMBINED CHAIR AND DESK

Filed Sept. 12, 1935 4 Sheets-Sheet 2

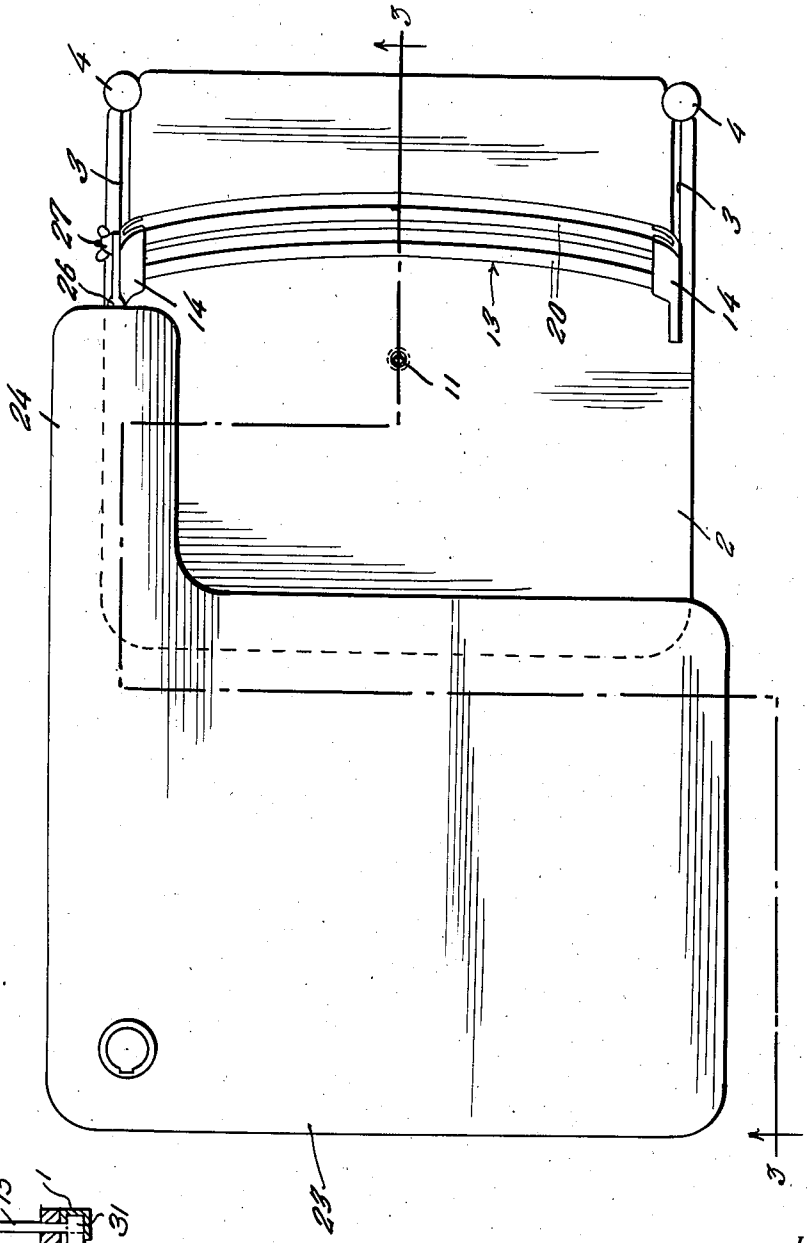

Fig. 2.

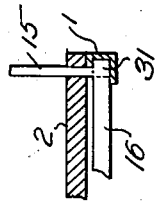

Fig. 8

Inventors

Marion McD. Pickle

Daniel E. Parsons

By Clarence A. O'Brien

Attorney

Nov. 30, 1937. M. McD. PICKLE ET AL 2,100,597

COMBINED CHAIR AND DESK

Filed Sept. 12, 1935 4 Sheets-Sheet 3

Fig. 3.

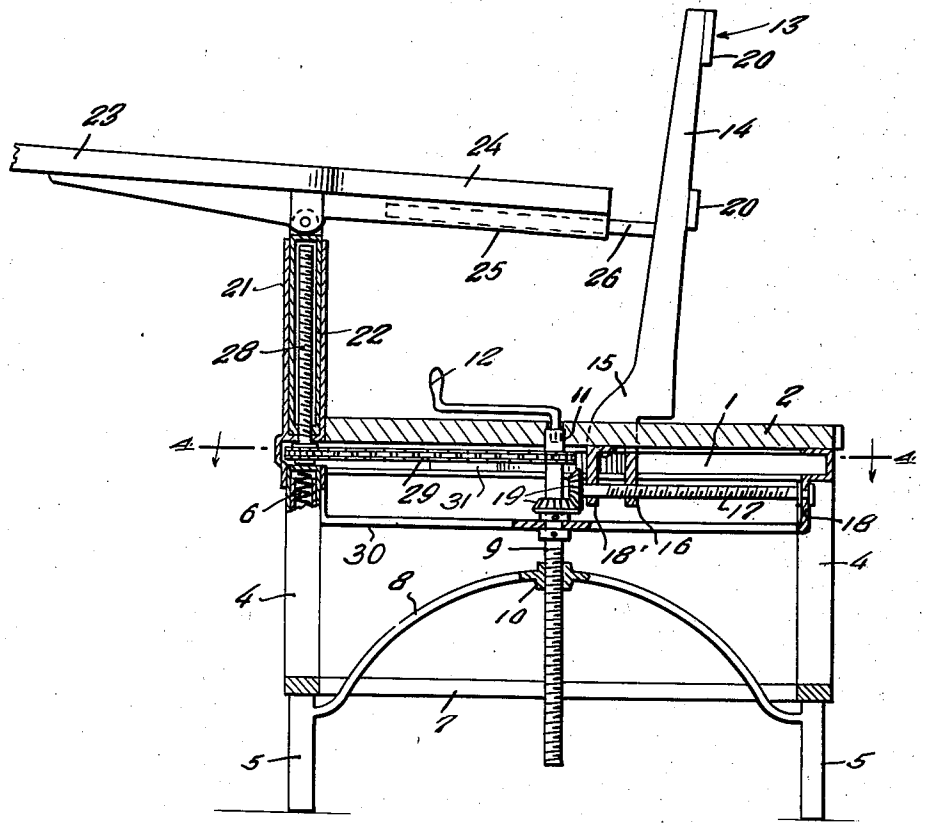

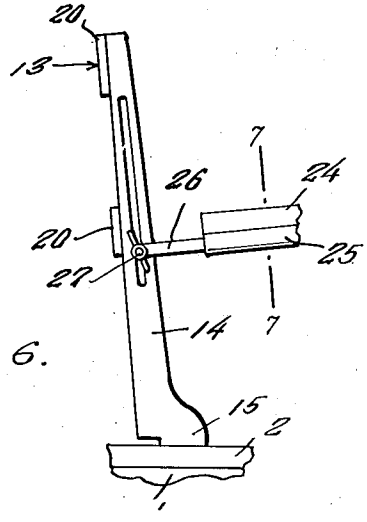

Fig. 6.

Fig. 7.

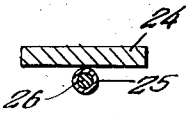

Inventors

Marion McD. Pickle

Daniel E. Parsons

By Clarence A. O'Brien

Attorney

Nov. 30, 1937. M. McD. PICKLE ET AL 2,100,597

COMBINED CHAIR AND DESK

Filed Sept. 12, 1935 4 Sheets-Sheet 4

Fig. 4.

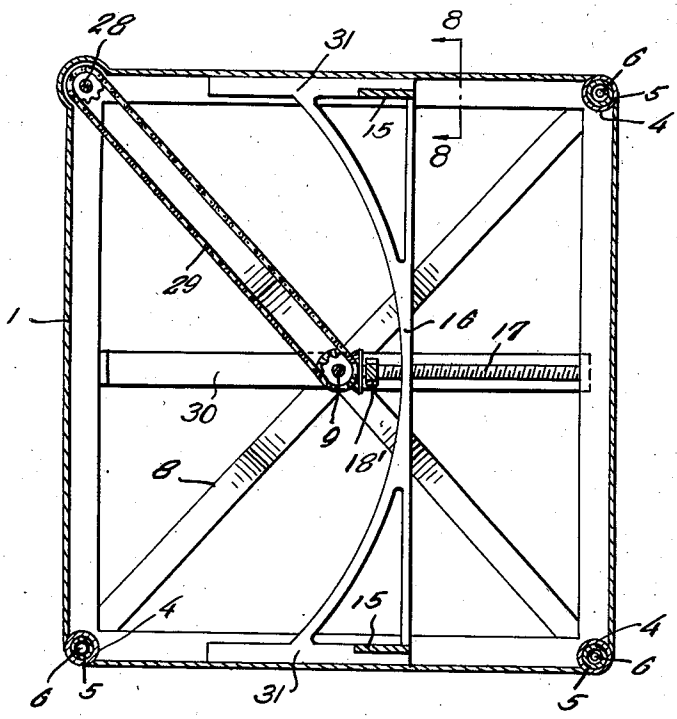

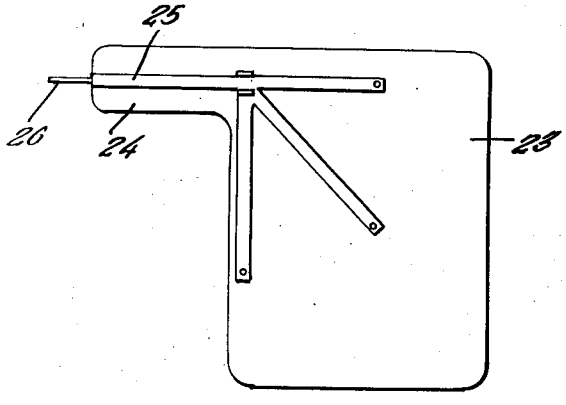

Fig. 5.

Inventors

Marion McD. Pickle

Daniel E. Parsons

By Clarence O'Brien

Attorney

Patented Nov. 30, 1937

2,100,597

UNITED STATES PATENT OFFICE

2,100,597

COMBINED CHAIR AND DESK

Marion McDonald Pickle and Daniel E. Parsons,
Knoxville, Tenn.

Application September 12, 1935, Serial No. 40,334

3 Claims. (Cl. 155—92)

The present invention relates to new and useful improvements in combination chairs and desks for use particularly in schools and has for its primary object to provide, in a manner as hereafter set forth, an article of this character embodying a novel construction, combination and arrangement of parts through the medium of which the seat, desk and back may be simultaneously adjusted by common means to accommodate children of different sizes.

Other objects of the invention are to provide a combined chair and desk of the aforementioned character which will be comparatively simple in construction, strong, durable, highly efficient and reliable in use, compact, light in weight, attractive in appearance and which may be manufactured at low cost.

All of the foregoing and still further objects and advantages of the invention will become apparent from a study of the following specification, taken in connection with the accompanying drawings wherein like characters of reference designate corresponding parts throughout the several views, and wherein:—

Figure 1 is a view partially in side elevation and partially in vertical section of a combined chair and desk constructed in accordance with the present invention.

Figure 2 is a top plan view thereof.

Figure 3 is a vertical sectional view, taken substantially on the line 3—3 of Figure 2.

Figure 4 is a view in horizontal section, taken substantially on the line 4—4 of Figure 3.

Figure 5 is a detail view in bottom plan of the desk.

Figure 6 is a view in side elevation of the rear portion of the chair.

Figure 7 is a detail view in vertical transverse section, taken substantially on the line 7—7 of Figure 6.

Figure 8 is a view in cross section through a side portion of the chair, taken substantially on the line 8—8 of Figure 4.

Referring now to the drawings in detail, it will be seen that the embodiment of the invention which has been illustrated comprises a frame 1 of channel iron having secured thereon a seat 2, the rear portion of said seat being provided, adjacent the sides thereof, with longitudinal slots 3 (see Figure 2), the purpose of which will be presently set forth. Depending from the corner portions of the frame 1 are tubular guides 4 in which hollow legs 5 are slidably mounted for vertical adjustment. As best seen in Figure 1 of the drawings, the guides 4 are closed at their upper ends and the legs 5 are closed at their lower ends. Coil springs 6 are provided in the legs 5 for yieldingly urging said legs downwardly in a manner to facilitate raising the seat 2. Braces 7 extend between the lower end portions of the guides 4.

The legs 5 are fixed on the free ends of the legs of a spider 8. Rotatably mounted on a longitudinal bar 30 on the frame 1 is a vertical screw shaft 9 which is threadedly engaged in the central or hub portion 10 of the spider 8. At its upper end, the screw shaft 9 terminates in a socket 11 which is rotatably engaged in a vertical opening which is provided therefor in the seat 2, said socket 11 being for the reception of a removable actuating crank 12.

The reference numeral 13 designates generally a back which is mounted for longitudinal adjustment relative to the seat 2. The back 13 includes posts 14 having depending brackets 15 on their lower ends extending slidably through the slots 3 in the seat 2. The brackets 15 include slides 31 which travel in the side members of the frame 1. Extending between the lower portions of the brackets 15, below the seat 2, is a bar 16. The reference numeral 17 designates a horizontal screw shaft which is journaled in suitable bearings 18 and 18' on the frame 1 and the seat 2, respectively, said screw shaft being threadedly engaged in the bar 16. Beveled gears 19 connect the screw shaft 17 to the vertical screw shaft 9 for actuation thereby. Slats or similar members 20 extend between the posts 14 of the back 13.

Rising from the right front corner portion of the frame 1 is a substantially tubular guide 21 which slidably receives a vertically adjustable post 22. Pivotally mounted for rocking adjustment on the upper end of the post 22 is a desk 23 of suitable material, preferably wood. The desk 23 includes a rearwardly projecting arm portion 24 having mounted longitudinally therebeneath a sleeve 25. The sleeve 25 slidably receives a rod or the like 26 which is adjustably mounted on the adjacent post 14 of the back 13 by a bolt and wingnut connection 27 which is slidably connected to said adjacent post 14 (see Figure 6).

The post 22 is hollow and said post is threadedly mounted on a screw shaft 28 which extends upwardly into the guide 21 through the closed lower end of said guide, as best seen in Figure 3 of the drawings. The screw shaft 28 is connected to the screw shaft 9 for actuation

thereby through the medium of a chain and sprocket connection 29.

It is thought that the operation of the device will be readily apparent from a consideration of the foregoing. When an adjustment is desired, the crank 12 is, of course, engaged in the socket 11 on the upper end of the shaft 9. When the shaft 9 is rotated in one direction, the seat 2 will be elevated on the supporting legs 5, the back 13 will be moved rearwardly relative to said seat 2, and the desk 23 will be raised relative to the seat 2. When the screw shaft 9 is rotated in the opposite direction, the seat 2 will, of course, be lowered on the legs 5, the back 13 will be adjusted forwardly and the desk 23 will be simultaneously lowered. In addition to being vertically adjustable, the desk 23 may be conveniently adjusted to any desired inclination on the supporting post 22. When an adjustment is to be made, the connection 27 is first loosened.

It is believed that the many advantages of a combined chair and desk constructed in accordance with the present invention will be readily understood, and although a preferred embodiment of the device is as illustrated and described, it is to be understood that changes in the details of construction and in the combination and arrangement of parts may be resorted to which will fall within the scope of the invention as claimed.

What is claimed is:

1. A combined chair and desk comprising a frame, substantially tubular guides depending from said frame, supporting legs slidably mounted in said guides, a seat mounted on the frame, a back mounted for sliding adjustment in a horizontal plane on said frame, a guide rising from the frame, a post slidably mounted in the second-named guide, a desk rockably mounted on said post, means adjustably connecting the desk to the back, and common means for adjusting the seat on the legs and for adjusting the desk relative to said seat and for adjusting the back simultaneously.

2. A combined chair and desk comprising a frame, substantially tubular guides depending from said frame, a seat mounted on said frame, a vertical screw shaft rotatably mounted on the frame, a spider threadedly mounted on said screw shaft, supporting legs mounted on the free ends of the legs of said spider and slidably engaged in the guides, coil springs yieldingly urging said supporting legs downwardly in said guides, a back slidably mounted on the frame for adjustment in a horizontal plane relative to the seat, said back comprising posts, brackets on the lower ends of said posts, the seat having longitudinal slots therein, said brackets being operable in said slots, a bar extending between the brackets beneath the seat, a horizontal screw shaft rotatably mounted on the frame and seat and threadedly engaged in the bar, means connecting the second-named screw shaft to the first-named screw shaft for actuation thereby, a substantially tubular guide rising from the frame, a post slidably mounted in the second-named guide, a desk mounted for rocking adjustment on the second-named post, adjustable means connecting the desk to one of the first-named posts, and means operatively connecting the second-named post to the first-named screw shaft for actuation thereby for raising and lowering the desk relative to the seat.

3. A combined chair and desk comprising a seat, supporting means for said seat including legs, a back for said seat mounted thereon, a vertically extensible sectional support upstanding from the front of said seat, a desk pivotally mounted on said support for vertical adjustment by extension of the support, a telescopic connection between said desk and back whereby vertical adjustment of said desk causes the latter to swing into different inclined positions, and manipulative means for extending said support comprising a screw shaft operatively connected to one section of the support and one leg and having a sprocket wheel thereon for operating the same, a shaft rotatably supported by said legs and having a sprocket wheel fast thereon, and a sprocket chain connecting said sprocket wheels.

MARION McDONALD PICKLE.
DANIEL E. PARSONS.