Nov. 5, 1963 R. H. PUBLOW 3,109,881

RESISTANCE CORE IGNITION CABLE

Filed Aug. 4, 1961

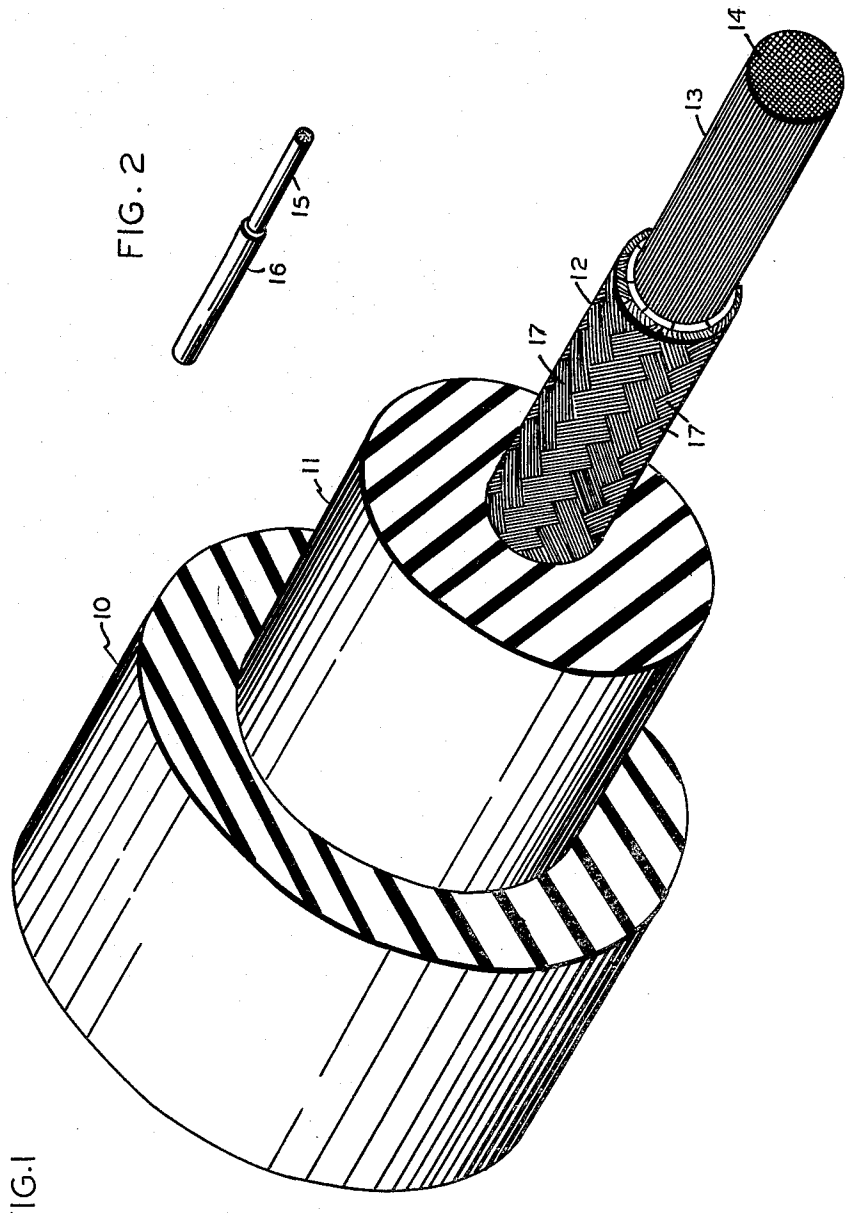

FIG. 2

FIG. 1

INVENTOR.
RICHARD H. PUBLOW

BY

Robert O. Sommer

AGENT

United States Patent Office 3,109,881 Patented Nov. 5, 1963

3,109,881

RESISTANCE CORE IGNITION CABLE

Richard H. Publow, Marion, Ind., assignor to Essex Wire Corporation, Fort Wayne, Ind., a corporation of Michigan

Filed Aug. 4, 1961, Ser. No. 129,265
1 Claim. (Cl. 174—118)

This invention relates to electric cable for internal combustion engine ignition systems and particularly to such cable having a conductive core of high resistance for suppressing the generation of high frequency interference by the ignition system.

A known cable of this type is disclosed in the United States patent to Leslie C. Wolcott, No. 2,714,623, patented August 2, 1955. The cable shown in the Wolcott patent comprises essentially a core of fibrous material such as parallel linen threads encased in a sheath of braided rayon which is impregnated with microscopic particles of graphite distributed throughout the fibers of the cord. The impregnated core is coated with a neoprene latex over which is extruded one or more sheaths of rubber and/or neoprene. Although this cable is generally satisfactory and commercially successful, it is not ideal because the resistance of the core changes substantially during extruding and vulcanization of the cable sheath. In addition, the tensile strength of the core drops by as much as fifty (50) percent during vulcanization of the sheath. Also, considerable difficulty has been experienced in making good electrical connection of terminals to this cable. All these have contributed to a high scrap loss and a corresponding high cost in the use of the cable.

When a terminal connection is made to the cable shown in the Wolcott patent by means of a wire clip or pin driven into the core, it has been found that a significant number of cables will fail after a short period of use. Investigation of these failures revealed that their prevention depends upon the wire pin of the terminal being driven accurately into the core to provide good contact between the core and the pin along the entire length of the latter. At times, due to the core not being exactly centered in the sheath or the wire pin being deformed, only a small part of the wire pin will make contact with the cable core. A resistance check of the cable assembly will not reveal this faulty contact, but later, when the assembly is employed in a vehicle engine, a high-resistance connection develops, due to the small amount of contact. The high-resistance connection overheats, causing partial deterioration of the rayon and linen core which results in deposit of gummy matter on the surface of the terminal pin. This further increases the resistance of the connection, until there is no contact between the wire pin and the graphite on the core. Then sparking occurs between the terminal pin and the nearest conductive portion of the core, which causes burning and destruction of the core. After a time, so much of the core is destroyed that further sparking cannot occur and the cable is completely inoperative. Such failures of defective connections may be reproduced in only a few minutes by an accelerated test, in which 110-volt, 60-cycle voltage is applied to a short length of cable.

Another difficulty experienced with cable constructed according to the Wolcott patent is that, when it is subjected to a severe pulling force, as during its disconnection from a spark plug, its resistance will increase. Upon termination of the stress, the resistance value of the cable does not return to its original value, but remains with a substantial permanent increase.

It will be evident from the foregoing that manufacturing and field experience with resistance core ignition cable has demonstrated a need for further improvement

to provide a cable with stable electrical properties and increased reliability under adverse operating conditions.

An object of the present invention is to provide an improved resistance core cable for electrical ignition systems and the like, characterized by a high stability in electrical characteristics under adverse manufacturing and operating conditions.

Another object of this invention is to provide such resistance core cable having a high degree of reliability under operating conditions.

A further object of this invention is to provide an improved resistance core cable which may be economically and conveniently manufactured.

Other objects and advantages of the invention will become apparent upon consideration of the following specification taken in conjunction with the accompanying drawing in which:

FIG. 1 is a perspective view illustrating one type of cable constructed in accordance with the teachings of this invention, some parts of the cable being partially cut away in order to clearly illustrate other parts which would not normally be visible; and

FIG. 2 is an enlarged perspective view, partly broken away and in section, of a glass fiber employed in the cable.

Referring to the drawing, a resistance core cable is shown comprising an outer insulating sheath 10, an inner insulating sheath 11, a braided envelope 12 of mineral fibers, and a fibrous mineral base conductive core 13. The outer sheath 10 is preferably of an oil- and ozone-resistant elastomeric material, such as a polychloroprene compound elastomer. The inner sheath may consist of a butadiene-styrene rubber. Other known flexible elastomers of any suitable types may also be used with satisfactory results and for some purposes, only a single sheath may be employed. Each of the sheaths is applied over the envelope 12 by a conventional extrusion process and cured in a well-known manner with the sheaths bonded to each other and the inner sheath 11 adhering to the envelope 12.

The core 13 consists of a large number of glass fiber filaments 14 which are arranged lengthwise of the cable and are substantially continuous in length throughout any given length of the cable. Each of the filaments 14 is composed of a number of substantially continuous and nontwisted glass fibers 15 in compact, side-by-side relation. Each fiber 15 throughout its length has on its surface a pliant, tenaciously adhering film or coating 16 of electrically conducting material. This continuous unitary film may consist of finely divided or colloidal carbon particles and a binder of flexible or elastic material which holds the carbon particles to the fibers 15. Film 16 may be one of the materials disclosed in United States Patents 1,771,055 and 2,495,199, or it may be a homogenous coating of the type disclosed in United States Patent 2,341,219. Any method conventionally employed for applying such films and coatings to a glass fiber may be utilized to form coating 16 on the fibers 15.

A preferred construction uses 60 filaments 14 gathered together, preferably in substantially parallel form, although they may be twisted to some extent. Each filament 14 consists of 204 glass fibers of .00036-inch diameter. The tubular envelope 12 is formed tightly about the core 13 by a suitable 16-carrier braiding machine. The preferred envelope construction comprises strands 17 closely woven with 18.2 picks per inch over the core 13 in a basket-weave braid or standard two-over-and-two-under braid. The strands 17 are each composed of four parallel filaments each consisting of 204 glass fibers .00036 inch in diameter which have no conductive coating. The fibers comprising the strands 17 are substantially con-

tinuous in length throughout any given length of the cable and are not appreciably twisted.

The utilization of a core having glass fibers with individual tenacious coatings of filmlike, conductive material, as opposed to a core impregnated with unfixed carbon particles, has the advantage that it provides a cable with considerable more stability in resistance value when the cable is axially stretched. Because the envelope **12** is mechanically connected with the sheaths **10** and **11** and initially sustains axial tensile stresses applied to the cable while the fibers **14** remain relatively unstressed, there is little stressing of the conductive material. Further, the envelope, by virtue of its basket-weave construction, exerts a radial compressive force upon the core in response to a strong axial pull which compacts the coated filaments into a better conducting relation with each other. Surprisingly, it has been found that these features cause the resistance of cable constructed according to this invention to decrease by as much as twenty-five (25%) percent upon a sever axial pull, instead of increasing. Upon termination of the pull, the resistance of the cable returns to substantially its initial value, whereas, cable constructed according to the above-mentioned Wolcott patent has a substantial permanent increase in resistance when subjected to the same force.

It has also been found that the electrical connection properties of cable constructed according to the present invention are vastly superior to that of the prior construction described above. Using the accelerated test described above, a properly terminated cable of the latter prior type fails in about twenty (20) minutes, its resistance increasing to six (6) times its initial value. The present cable, when subjected to the same test, merely decreased slightly in resistance. Then, to determine if the present cable could be satisfactorily terminated, even if a wire pin terminal had a minimum contact with the conductive core of the cable, two (2) spaced, 1/32-inch-diameter pins were inserted radially into the cable sheath until they penetrated the cable core. Although this amounted to only five (5%) percent of the normal contact between the pins and the core, there was no failure of

the core when the pins were connected to a 110-volt, 60-cycle voltage, even when left energized until smoke came from the cable and the jacket swelled. The resistance of the heated cable was about twenty-five (25%) percent less than its initial cool value, but upon cooling returned to substantially its normal value. The same specimen was subjected to two more cycles of the same test, with identical results. It will be evident from the foregoing that a surprisingly successful solution of the termination problem has been attained by the present invention.

It will be understood that modifications and variations may be effected without departing from the scope of the invention as claimed.

What is claimed is:

An electrical resistance cable comprising:

(*a*) an electrically conductive core consisting of thousands of substantially straight and parallel flexible glass fibers individually coated with a continuous film of conductive material disposed in adherent relationship over the peripheral surface of each fiber; said film containing minute particles of carbon and a binder material which tenaciously binds said carbon particles to said fiber so that each fiber is essentially free of unfixed carbon particles;

(*b*) an envelope substantially free of any electrically conductive material surrounding said core and comprising a tubular braid of closely-woven strands, each strand consisting of a plurality of substantially continuous glass fibers in substantially parallel relationship; said envelope being longitudinally extensible in response to axial pulling forces to exert a compressive force upon said core; and

(*c*) an outer insulating sheath of elastomeric material surrounding and adhering to said envelope.

References Cited in the file of this patent

UNITED STATES PATENTS

2,341,219	Jones	Feb. 8, 1944
2,714,623	Wolcott	Aug. 2, 1955