Feb. 9, 1965 R. H. THORNER 3,168,933

THROTTLE CONTROL MECHANISM

Filed June 20, 1961

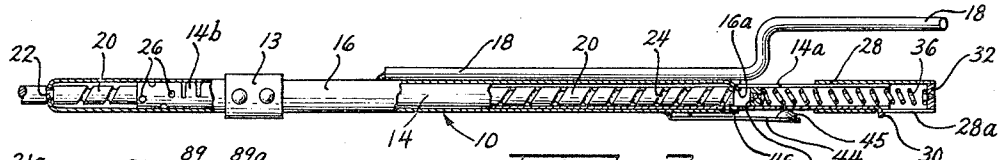

Fig. 2

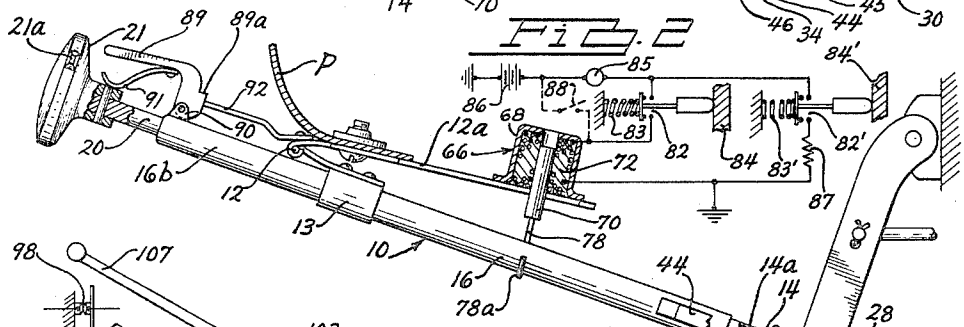

Fig. 1

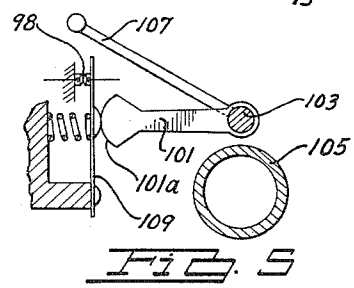

Fig. 5

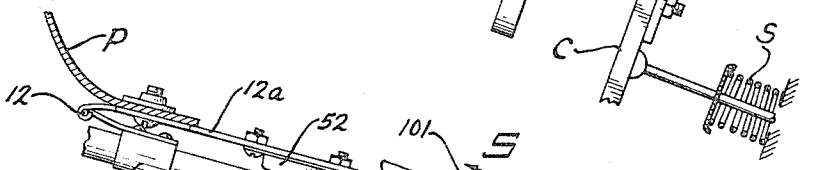

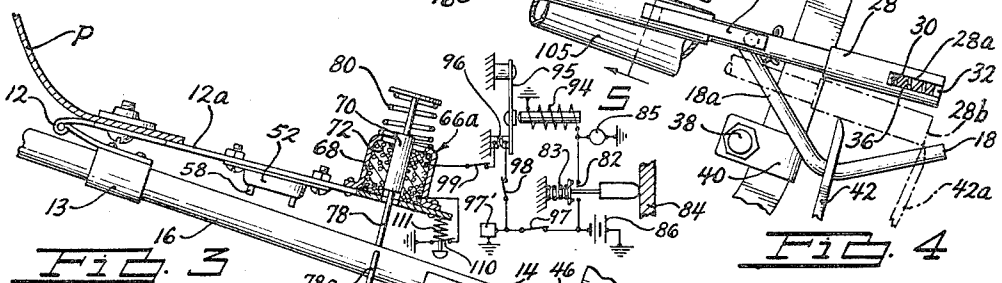

Fig. 4

Fig. 3

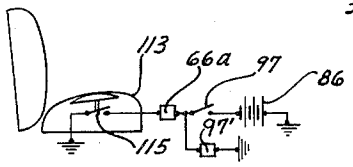

Fig. 6

INVENTOR.
ROBERT H. THORNER
BY Owen & Owen
ATTORNEYS

United States Patent Office 3,168,933 Patented Feb. 9, 1965

3,168,933

THROTTLE CONTROL MECHANISM

Robert Henry Thorner, 3410 W. Chicago Blvd., Detroit, Mich.

Filed June 20, 1961, Ser. No. 118,411
29 Claims. (Cl. 180—82.1)

This invention relates to an improvement in a control device to position the control means or throttle of an automotive vehicle whereby the driver may rest his foot and leg during sustained driving periods. In one form, the invention may be associated directly with the accelerator pedal, preferably in a location which permits cooperation with the brake-actuating mechanism.

This application is a continuation-in-part of my co-pending applications Serial No. 836,419, filed August 27, 1959, entitled "Throttle Control Mechanism," and Serial No. 859,504, filed December 14, 1959, entitled "Throttle Control Mechanism," now refiled as Serial No. 312,143, dated September 27, 1963.

In my previous inventions relating to so-called "hand-throttles," also sometimes known as "throttle holders," I have endeavored to provide a device that will operate as automatically as possible within the confines of acceptable safety limitations. In my co-pending application Serial No. 836,419 there is disclosed novel means for providing a "coasting" action (as described therein) after *partial* travel of the brake pedal, such that re-engagement of the device is achieved automatically merely by depressing the accelerator pedal without other manual operation of the device; but upon each *full* travel of the brake pedal, as when stopping the vehicle, the device automatically is held out of further operation and must be re-set by hand before it can be engaged by depressing the accelerator pedal. In many thousands of miles of driving, I have found this control system to be extremely useful and satisfying over ordinary hand throttles (without the "coasting" feature) which lock-out and must be reset by hand following each movement of the brake pedal and for any and all travels thereof.

In my co-pending applications Serial Nos. 836,419 and 312,143, there is disclosed a novel combination of elements for providing the "coasting" action for *any and all* brake travels, whereas the device locks or is held out of operation automatically only upon immobilization of the vehicle; in this combination, means are included to hold the device in its inoperative position *after* the vehicle is started so that the throttle controlling action of the device must be initiated manually (by hand) consciously by the operator each time the vehicle is first activated, being substantially automatic thereafter. I have found this form of the device to be by far the most useful and satisfying operation of any hand throttle. However, such desirable operation is of practical utility only providing the system is completely safe when placed in the hands of the public in mass quantities. Accordingly, I believe that it is highly desirable for the device to automatically lock out or be held out of operation each time there is a change of drivers, for example while the engine is idling. This situation occurs with some frequency, for example when a vehicle is left at a parking lot with the engine idling, waiting for an attendant to park the car. If the hand throttle does not lock out automatically incident to a change of drivers while the engine is idling, then the attendant might be surprised, not knowing the device will be activated automatically if he opens the throttle sufficiently. The surprise element in this situation might cause severe car damage, or worse, bodily injury to bystanders.

The instant invention includes in a semiautomatic hand-throttle combination novel means which accomplish the foregoing desirable result, such that the device is automatically locked out when the driver leaves the vehicle, and is applicable to fully automatic governor-type throttle controls as well as for hand throttles. In one form of my invention, means are provided to automatically lock or hold out the hand throttle whenever the vehicle door (at least on the driver's side) is opened, which always occurs whenever there is a change of drivers. In another form of the present invention, means are provided to automatically lock or hold out the device whenever the transmission control lever is placed at least in "neutral" position which usually occurs upon a change of drivers; and in still another form of the invention, the hand throttle is automatically locked or held out of operation incident to removing the driver's weight from his seat, as when there is a change of drivers.

A primary object of the present invention is to provide a throttle control device for an automotive vehicle which is simple in construction, and which requires hand initiation by the vehicle operator only once each time he enters the vehicle to operate same, and which device is automatically rendered inoperative and held out of further operation each time there is a change of drivers, for example while the vehicle engine is idling.

Another important object of the present invention is to provide a throttle control device for an automotive vehicle which is simple in construction, and which includes a rotatable speed-adjustment knob having a single tactile indicator, and which also includes means to provide sufficiently fast movement of the throttle per turn of the knob to cover the entire practical speed range by feeling the rotary positions of the tactile indicator, and which further includes other tactile and/or audible means for indicating to the operator one axial position of the means in the device which is moved by the knob axially to position the throttle.

Another object of the present invention is to provide a throttle control device for an automotive vehicle which is simple in construction, and which, for safety purposes, is inactivated solely by positive mechanical means operated by the vehicle brake-actuating means to completely disconnect the device from the normal vehicle controls, and which may include restraining means to automatically lock-out the device and render it inoperative whenever the vehicle is not in operation.

Another object of the present invention is to provide a throttle control device for an automotive vehicle as described in the preceding paragraph which may include in the combination novel permanent magnet safety means arranged to maintain the device in the lock-out or inoperative position.

An additional object of the present invention is to provide a throttle control device for an automotive vehicle as described in the preceding paragraph, in which re-engagement of the device, after braking the car, is entirely automatic and incident to depression of the accelerator pedal.

Other objects and advantages of the invention will become apparent from the following description and from the accompanying drawings, in which:

FIG. 1 is an elevational view of one form of the invention as seen from the driver's right side, the device being shown in its active or engaged position, with certain vehicle parts being diagrammatically indicated in section, together with a diagram of an electrical circuit and switch operators therefor;

FIG. 2 is a top plan view of a tubular portion of the device shown in FIG. 1 with parts broken away and parts in section;

FIG. 3 is a fragmentary elevational view of the device of the present invention in its inactive or "coasting" position.

FIG. 4 is a fragmentary elevational view of the device

of the present invention in its inoperative or lock-out position;

FIG. 5 is a fragmentary sectional view taken along the line 5—5 of FIG. 4, showing means controlled by the transmission selector member for automatically rendering inoperative the device of the present invention; and

FIG. 6 is a somewhat diagrammatic illustration of a seat portion of an automotive vehicle showing another form of the invention in operative relation thereto.

It is to be understood that the invention is not limited in its application to the details of construction and arrangement of parts illustrated in the accompanying drawings, since the invention is capable of other embodiments and of being practiced or carried out in various ways. Also, it is to be understood that the phraseology or terminology employed herein is for the purpose of description and not limitation.

Referring to the drawings, the present invention is shown, by way of illustration, as applied to an automotive vehicle to control the throttle and hence the flow of fuel mixture to the engine for establishing the speed thereof. The conventional brake pedal B and accelerator pedal C, biased toward idle by the spring S, are shown in their operative relation. The term "throttle" as used herein is intended to include the speed controlling member of any kind of engine. Hence the hand-throttle of the present invention is adapted to establish the operating position of the "engine control means," which in addition to the accelerator pedal C includes the throttle (not shown), or its equivalent, including any linkage means between the accelerator and the throttle.

Means are provided to position the control means including the accelerator C in any desired position. As illustrated in FIGS. 1 and 2; such means comprise a tube assembly **10** which is pivoted for angular movements about hinge means secured thereto, such as a door-type pin-hinge **12**, also secured to the vehicle dash panel P, as by a pair of screws shown. The tube assembly comprises an inside detent tube **14** telescoping within an outer tube **16** and axially slidable in relation thereto. A cam-piece **18**, illustrated in the form of a metal rod, is secured to the outer tube, as by silver soldering. A rod or shaft **20** having a knob **21** secured at one end as by pinning, is inserted within the bore of the inside tube for free relative rotational movements. As shown in FIG. 2 one end of the outer tube is formed into a peripheral groove **22** of shaft **20** to prevent relative axial movements but to enable complete relative rotary movements. The inside tube **14** has an axial slot **14***a* formed in its entire length (FIGS. 1 and 2) to receive a tab **16***a* of tube **16** bent into the slot, as shown in FIG. 2. A pair of tabs **14***b* are sprung outwardly to provide friction as desired. Shaft **20** also includes a thread **24** cooperating with mating thread means in the form of depressions or dimples **26** in the inside tube so that rotation of knob **21** causes the inside tube **14** to extend from or telescope into the outside tube **16** in relative axial movements.

The inside tube **14** carries a tube extension **28** having a slot **28***a* cooperating with a stop tab **30** bent out from tube **14** to enable free but limited axial movements of extension **28** in relation to tube **14**. A plug **32** is secured by suitable means, as by soldering or pinning, to the end of extension **28** and another plug **34** is secured within tube **14**, as by pinning; and a spring **36** is inserted between the two plugs to urge extension **28** into its rightwardly position, as shown in FIG. 2, wherein the left end of the slot **28***a* abuts rightwardly against tab **30**.

A brake release pin **38** is secured, as by nuts, to the brake arm by a bracket **40**. The pin **38** extends any desired length in a direction perpendicular to the plane of the drawings. A cam portion **18***a* of cam-piece **18** rests by gravity on brake release pin **38** since the section of tube assembly **10** to the right of hinge **12** is heavier than the section to the left thereof. The accelerator C has secured thereto an extension **42** in alignment with tube extension **28** to cooperate therewith in a manner to be described.

Means are provided to enable the operator to locate the relative axial position of tubes **14** and **16** at one rotary position of knob **21**. Such means provide a "reference base" in terms of "observed" m.p.h. on each car so that the operator can always find his setting by touch, even though the device had been previously used by another driver. In the drawing, such "reference base" means is shown, by way of example, as a leaf spring member **44** having a ball detent **45** cooperating with a suitable hole or aperture **46** (shown best in FIG. 3) in the wall of tube **14**. Thus, the operator can "feel" one relative axial position of tubes **14** and **16** when the ball **45** drops into the hole **46**.

The throttle control device operates as follows: In FIG. 1, the throttle holder is shown in its active or engaged position to hold the accelerator extension **42** in any desired position selected by rotation of knob **21**. A single tactile indicator **21***a* on knob **21** is "felt" by the operator to tell (by touch) its rotary position corresponding to 3, 6, 9 or 12 o'clock, for example, and the speed is noted at each "clock" position. Thereafter, the indicator is set (by feel) to a memorized clock position corresponding to the desired speed. In the position shown in FIG. 1, the force of spring **36** is always overpowered by the accelerator return spring S so that plug **32** abuts the end of tube **14**. When the brake pedal is either depressed slightly to reduce speed merely by "coasting" or is depressed fully to stop the vehicle, pin **38** acts on cam-portion **18***a* to raise the tube assembly **10** completely clear of extension **42**. At this time, the tube extension **28** snaps to its extreme rightward position indicated by a resulting "clicking" sound, while the accelerator snaps to its idle position. When the foot is removed from the brake pedal, the tube extension again rests by gravity on top of the accelerator extension as shown in FIG. 3, which is the inactive or "coasting" position (also shown in FIG. 4 as **28***b*). The vehicle can now be driven normally since the end of accelerator extension **42** will merely ride along the bottom of tube extension **28** without engagement since the latter now extends beyond the accelerator positions for average driving at a given speed setting of the knob. The throttle holder is re-engaged at any time merely by depressing the accelerator to such an extent that the pedal extension **42** moves past the end of extension **28** (as at **42***a* in FIG. 4), at which time the tube assembly **10** drops down until the cam portion **18***a* strikes pin **38** which makes an audible clicking signal to indicate that the foot can be removed from the accelerator; the device is again in the active or engaged position shown in FIG. 1 after the force of the accelerator spring overpowers spring **36** and moves extension **28** leftwardly into its operating position.

Restraining means are provided to enable manual or automatic lock-out of the hand throttle to an inoperative status and may include safety means to hold or maintain the device in its inoperative or lock-out position. One form of restraining means is illustrated in FIG. 1 which includes a solenoid **66** supported by a bracket **68** secured to the hinge extension **12***a*. The solenoid includes an armature **70** sliding axially within a coil **72** and carrying a wire-piece or rod **78** having a U-portion **78***a* at its lower end for engaging the tube assembly **10**. When the solenoid is energized, the armature **70** moves wire **78** upwardly to raise tube assembly **10** clear of the accelerator extension **42**. In the form illustrated in FIG. 1, the solenoid is connected in series with the "dome" light switch **82** which is biased closed by a spring **83** when the (left) door **84**, adjacent the driver, is opened to energize the dome light **85** connected in series with battery **86**. The right door **84'** similarly controls the light **85** by a switch **82'** biased by a spring **83'**, all in a circuit parallel with the left door switch **82** and coil **72** but in series with the

light and battery. If desired, a resistance 87 may be provided to balance the inherent resistance of coil 72 so that the light 85 is equally bright with the opening of either door. Also, if desired, a manually operated switch 88 may optionally be connected as shown by the dotted line in parallel with switch 82 and light 85 but in series with coil 72. With switch 88 mounted near the instrument panel, for example, the operator can disengage and maintain the device inoperative by closing the switch.

Several forms of safety means are illustrated herein, which are completely separate from the electric circuit and from the mechanical brake release means (cam portion 18*a* and pin 38). The safety means maintains the restraining means in its inoperative position even after the vehicle is operated, and may be part of the restraining means or separate therefrom. In FIG. 1, a mechanical-latch safety-means is shown separate from the restraining means which comprises a latch member 89 carried by tube 16 at a hinge 90 biased in a clockwise direction by a leaf or wire spring 91 riding on knob 21. A latch arm 92 is secured to the fixed portion of hinge 12 and cooperates with a catch or detent step 89*a* of the latch member 89 to hold assembly 10 out of operation after the tube portion 16*b* lowers the catch 89*a* below the arm 92 when the tube 16 is raised fully by solenoid 66. Thus, the safety means is operated by and upon activation of the restraining means. The driver releases the safety means by pressing down on the latch member 89 whenever he wishes to place the device in operation. This action can be utilized to provide two optional types of operation. In the form shown, the catch is high enough that it cannot move below arm 92 even after pin 38 moves past the lowest part of cam portion 18*a* upon *full* application of the brake pedal B. In this instance, the "coasting" or inactive status is provided at *all* travels of the brake pedal, and the latch member engages the arm 92 only when solenoid 66 is energized to raise the tube assembly higher than is possible by the pin 38 to render the device inoperative.

A second type of operation may be achieved, if desired, by providing a catch 89*a* slightly lower than in the form previously described so it will engage arm 92 upon each *full* travel of the brake pedal, but not upon a partial or slight travel thereof. This arrangement is disclosed and discussed in more detail in my co-pending patent application Serial No. 836,419, now Patent No. 3,114,427. With this calibration, the device will provide the "coasting" or inactive status only upon a partial or slight travel of the brake pedal, but will render the device inoperative completely out of operation *each time* the vehicle is stopped by the brake; then the driver must release the device after each stop by pressing down on the latch member 89. However, the first type of operation, in the form shown, is preferred since the operator must only depress the latch member 89 once each time he first operates the vehicle. Thereafter the latch does not engage again until the door 84 is opened; or unless the driver deliberately renders the device inoperative in the meantime by pressing down on knob 21, which engages catch 89*a* and arm 92 (or by closing switch 88, if provided). This preferred type of operation is practicable, however, preferably in combination with the restraining and safety means disclosed herein.

In FIG. 1, solenoid 66 is operated only by the door 84 adjacent the driver to enable the operator to set the device for "fast-idle," and then leave the vehicle via the other door 84', for example to brush snow off the windows, while the engine warms up. However, if desired, solenoid 66 may be connected in parallel with only the light 85 but in series with both switches 82 and 82'. With this circuit, either door, when opened, renders the device inoperative.

In FIG. 3, the action of the solenoid 66*a* and its circuit is reversed from that in FIG. 1. In FIG. 3, a spring

80 urges armature 70, wire 78 and tube assembly 10 upwardly so that the device is moved and held out of operation whenever coil 72 is deenergized. The spring 80 in itself is a form of safety means. However, in addition, the latch type safety means of FIG. 1 may be employed. As an alternative, another form of safety means is illustrated in FIGS. 3 and 4, comprising a permanent magnet latch 52 having two poles 58 disposed to engage and hold tube 16 when assembly 10 is raised into the field of the magnet by spring 80 of the restraining means. With the magnet safety means used in place of the mechanical latch mechanism of FIG. 1, the operator must press upwardly on knob 21 to overpower the magnetic force and release the tube assembly 10 (downwardly). The tube assembly will remain in the "coasting" or inactive position only if coil 72 is energized, as will now be described.

In one main branch of a parallel electric circuit shown in FIG. 3, battery 86 supplies energy through the switch 82 operated by opening the driver's (left) door 84 to energize the dome light 85 and to a relay electro-magnet 94 in parallel with the dome light. The electro-magnet, when energized, causes a leaf spring member 95 to open a pair of relay contacts 96, which are normally closed by leaf spring 95, initially pre-bent to the left. In the other main branch of the parallel circuit, the battery 86 is in series with the ignition switch 97 (which controls the ignition load 97') and may optionally include a transmission-controlled switch 98 and/or a hand-operated switch 99 in addition to relay switch 96 for controlling solenoid 66*a*. In order for the solenoid to be energized, the ignition switch 97 (and switches 98 and 99, if provided) must be closed. The transmission control switch 98, if provided as will be discussed, is shown in FIGS. 4 and 5 to be operated by an arm 101 secured to the transmission shaft 103 mounted above the steering post 105 and controlled by the usual transmission selector or shift lever 107. The arm 101 causes switch 98 to close by forcing a leaf spring support 109 to the left when lever 107 is placed in at least its "driving" or high gear positions.

A lock-out switch 110, which is normally biased closed by a spring 111, is shown in the circuit in FIG. 3 and is desirable if justified in view of the extra espense or if used in place of the magnet 52. Switch 110 is opened only when the tube assembly is raised high enough to contact a button shown connected to the switch. This action deenergizes the solenoid which cannot be energized again by any of the other switches until and unless the knob 21 is moved upwardly *by hand* which lowers tube assembly 10 thereby closing switch 110. If switch 110 is used, the spring 80 in combination with this switch then acts as a safety means so that the magnet 52 or the latch mechanism of FIG. 1 would not be essential. Switch 110 is opened automatically whenever the device is rendered inoperative upon opening the ignition switch 97 and when either switch 96 or 98, whichever is provided, is opened. Also, while the device is engaged, it can be rendered inoperative at any time merely by the driver pressing knob 21 downwardly (toward the floor) by hand, and the device would be held out of operation either by the magnet 52, or by spring 80 if switch 110 is provided. In either case, the device can be moved to its inactive but ready position by pressing upwardly on knob 21. In the form of the invention illustrated in FIG. 3, the device is automatically rendered inoperative when the door is opened or the ignition is turned off, or when the transmission lever 107 is moved out of "drive" position.

Thus, when the engine is started with the door 84 closed and/or the control lever 107 is moved into "drive" position, the solenoid is energized and armature 70 moves wire 78 down and clear of the tube assembly 10, as shown in FIG. 3. However, before the device can be used, the driver must consciously press upwardly on

knob 21 to break the force of magnet 52 and drop the tube assembly into its "coasting" or inactive but ready position shown in FIG. 3, so that the hand throttle can then be operated as above described. If the vehicle is stopped to change drivers while the engine is idling, either (but not both) the switch 98 or the combined door relay mechanism (switches 82, 96, and magnet 94) would be employed. If the transmission switch 98 were provided, the first driver would always place the transmission control lever 107 in its "neutral" position before leaving the vehicle; this action renders the hand throttle inoperative as above-described so that the second or exchange driver must consciously re-activate the device if he wishes to use it. If the door relay mechanism is provided in place of the transmission switch 98, the first driver would leave the vehicle (with the engine idling) via his adjacent door 84; this action renders the hand throttle inoperative by causing switch 96 to open when switch 82 is closed, and the device is then held out of operation by the safety means, either magnet 52 or by spring 80 and switch 110, so that the second driver cannot engage the device unknowingly.

Switch 99 may be optionally provided and would be mounted near the instrument panel, if used, so that the driver could manually open and close the circuit as desired. However, the safety means of switch 110 with switch 80, magnet 52, or the latch mechanism of FIG. 1 is preferred to switch 99 (which utilizes spring 80 as a holding means) because the entire control of the device would be at the knob 21 and would not require special installation.

In FIG. 6, a third form of restraining means is illustrated for rendering the hand throttle inoperative when there is a change of drivers. The conventional driver's seat 113 is arranged to close a switch 115 upon the imposition of the weight of the driver, and to open the switch when the driver leaves the seat. The switch 115 is in series with the battery 86, ignition switch 97 and solenoid 66*a* arranged as shown in FIG. 3. Thus the hand throttle device is automatically rendered inoperative whenever the ignition is turned off and/or the driver leaves the seat 113.

In summary, the terminology used in this specification may be defined as follows: The device is "inoperative" in the lock-out or "off" position as shown in FIG. 4, and is in the "inactive" position when it is not locked out but not engaged as shown in FIG. 3; and the speed control is in the "active" or engaged position as shown in FIG. 1. The "movable positioning means" comprises the means to position the control means independent of foot pressure by the vehicle-operator and may include elements 10, 14, 16, 20, 23, 42, etc. The "restraining means" comprises the means to render the device inoperative or locked out, and may include elements 66, 70, 78, 82, etc., or elements 101, 103, 107, 93, etc. The "safety means" is operatively associated with the restraining means and is initiated, in the forms shown, by operation of the restraining means. The "safety means" comprises the means to maintain the device in the inoperative or "off" position after another operator enters the vehicle and starts it in motion; the "safety means" includes elements 89, 89*a* 90, 91, 92, etc., or elements 52, 53 cooperating with vertical movements of knob 21.

I wish it understood that my invention is not limited to any specific construction, arrangement or form of the parts, as it is capable of numerous modifications and changes without departing from the spirit of the claims.

What I claim is:

1. In a control device for an automotive vehicle having an engine and control means for said engine, said vehicle also including a movable element always operated by the vehicle driver whenever said driver leaves the vehicle, the combination of; means to regulate the position of said control means for establishing and controlling vehicle speed independent of foot pressure on the control means by the vehicle driver, restraining lock-out means responsive to said movements of said element in one direction to automatically render said positioning means inoperative with respect to said control means, and safety means operatively associated with said restraining means to maintain said positioning means in said inoperative status when said element is moved in a direction reverse from said first-named direction, whereby the device is automatically rendered inoperative at least when one driver is replaced by another driver.

2. In a control device for an automotive vehicle having an engine and control means for said engine and having brake-actuating means, said vehicle also including a movable element always operated by the vehicle driver whenever said driver leaves the vehicle, the combination of; means to regulate the position of said control means for establishing and controlling vehicle speed independent of foot pressure on the control means by said driver, release means operatively associated with said brake-actuating means to at least temporarily inactivate said positioning means with respect to said control means after a predetermined movement of said brake-actuating means, said release means including means operable to cause inactivation of said positioning means irrespective of a failure of any source of power in any part of the vehicle, said positioning means being disposed to enable automatic operative engagement of said positioning means and said control means after movement of said control means in an increase-speed direction by the vehicle driver, restraining means responsive to said movements of said element in one direction to automatically render said positioning means inoperative and incapable of inadvertent operation with respect to said control means until said positioning means is activated deliberately by the vehicle driver, and safety means operatively associated with said restraining means to maintain said positioning means in said inoperative status when said element is moved in a direction reverse from said first-named direction.

3. In a control device for an automotive vehicle having an engine and control means therefor and having brake-actuating means, said vehicle also including a movable element always operated by the vehicle driver whenever said driver leaves the vehicle, the combination of; means to regulate the position of said control means for establishing and controlling vehicle speed independent of foot pressure on the control means by the vehicle driver, completely positive mechanical release means disposed for direct operative connection of said positioning means and said brake-actuating means to at least temporarily inactivate said positioning means with respect to said control means after a predetermined movement of said brake-actuating means, and restraining means responsive to said movements of said element to automatically render said positioning means inoperative and incapable of inadvertent operation with respect to said control means until said positioning means is activated deliberately by the vehicle driver.

4. In a control device for an automotive vehicle having an engine and control means for said engine, said vehicle having at least one door movable in an opening and closing direction, the combination of; means operatively associated with said engine control means to regulate the position thereof for establishing and controlling vehicle-speed independent of foot pressure on the control means by the vehicle driver, restraining means operated by said door to automatically render said positioning means inoperative with respect to said control means when said door is opened, and safety means operatively associated with said restraining means to maintain said positioning means in said inoperative status when said door is again closed.

5. In a control device for an automotive vehicle having an engine and control means for said engine and having brake-actuating means, said vehicle having at least one door movable in an opening and closing direction,

the combination of; means to regulate the position of said control means for establishing and controlling vehicle-speed independent of foot pressure on the control means by the vehicle driver, release means operatively associated with said brake-actuating means to at least temporarily inactivate said positioning means with respect to said control means after a predetermined movement of said brake-actuating means, restraining means to automatically render said positioning means inoperative and incapable of inadvertent operation with respect to said control means until said positioning means is activated deliberately by the vehicle driver, an electric circuit, said restraining means including electromagnetic means connected in said circuit, and also including electric switch means in said circuit operated by said door to control said electromagnetic means for rendering said positioning means inoperative when said door is opened, and safety means operatively associated with said restraining means to maintain said positioning means in said inoperative status when said door is again closed.

6. In a control device for an automotive vehicle having an engine and control means for said engine and having brake-actuating means, said vehicle also including an element having movements incident to normal operation of the vehicle, the combination of; means to regulate the position of said control means for establishing and controlling vehicle speed independent of foot pressure on the control means by the vehicle driver, release means operatively associated with said brake-actuating means to at least temporarily inactivate said positioning means with respect to said control means after a predetermined movement of said brake-actuating means, restraining means responsive to said movements of said element to automatically render said positioning means incapable of inadvertent operation with respect to said control means until said positioning means is activated deliberately by the vehicle driver, an electric circuit, said restraining means including electromagnetic means connected in said circuit, electric switch means in said circuit operated by said positioning means when same is moved to said inoperative status to control said electromagnetic means for maintaining said positioning means in said inoperative status.

7. In a control device for an automotive vehicle having an engine and control means therefor, said vehicle also including a movable element always operated by the vehicle driver whenever said driver leaves the vehicle, the combination of; means to regulate the position of said control means for establishing and controlling vehicle speed independent of foot pressure on the control means by the vehicle driver, restraining means responsive to said movements of said element to automatically render said positioning means inoperative and incapable of inadvertent operation with respect to said control means until said positioning means is activated deliberately by the vehicle driver, an electric circuit, said restraining means including electromagnetic means connected in said circuit, and also including electric switch means in said circuit responsive to said movements of said element in one direction to control said electromagnetic means for causing movement of said positioning means to said inoperative status, and safety means initiated by operation of said restraining means for maintaining said positioning means in said inoperative status when said element is moved in a direction reverse from said first-named direction.

8. In a control device for an automotive vehicle having an engine and control means therefor and having brake-actuating means, said vehicle also including a movable element operated by the vehicle driver, the combination of; means to regulate the position of said control means for establishing and controlling vehicle speed independent of foot pressure on the control means by the vehicle driver, release means operatively associated with said brake-actuating means to at least temporarily inactivate said positioning means with respect to said control means after a predetermined movement of said brake-actuating means, said positioning means being disposed to enable automatic operative engagement of said positioning means and said control means after movement of said control means in an increased-speed direction by the vehicle driver, restraining means responsive to said movements of said element to automatically render said positioning means incapable of inadvertent operation with respect to said control means until said positioning means is activated deliberately by the vehicle driver, and safety means operatively associated with said restraining means and automatically initiated by operation thereof to maintain said positioning means in said inoperative status after the vehicle is again in operation, said safety means including manually operated means to enable the vehicle operator to deliberately release said positioning means from said inoperative status.

9. In a control device for an automative vehicle having an engine and control means for said engine and having brake-actuating means, said vehicle also having a seat for the vehicle driver, the combination of; means to regulate the position of said control means for establishing and controlling vehicle speed independent of foot pressure on the control means by the vehicle driver, release means operatively associated with said brake-actuating means to at least temporarily inactivate said positioning means with respect to said control means after a predetermined movement of said brake-actuating means, restraining means operated by said seat to automatically render said positioning means inoperative with respect to said control means whenever said driver leaves said seat, and safety means operatively associated with said restraining means to maintain said positioning means in said inoperative status when a vehicle driver again occupies said seat until said positioning means is activated deliberately and consciously by said driver.

10. In a control device for an automotive vehicle having an engine and control means therefor, said vehicle having at least one door, the combination of, means to regulate the position of said control means for establishing and controlling vehicle speed indepndent of foot pressure on the control means by the vehicle driver, restraining means to automatically render said positioning means incapable of inadvertent operation with respect to said control means until said positioning means is activated deliberately by the vehicle operator, an electric circuit, said restraining means including electromagnetic means connected in said circuit, and also including electric switch means in said circuit disposed to close when said door is opened, said electro-magnetic means including an armature operatively connected to said positioning means, biasing means acting on said armature to effect movement thereof and said positioning means into its inoperative status when said electro-magnetic means is de-energized, electro-magnetic relay means including relay switch means in said circuit disposed to be opened when said first-named switch means is closed upon opening said door to de-energize said electro-magnetic restraining means for rendering said positioning means inoperative with respect to said control means.

11. In a control device for an automotive vehicle having an engine and control means therefor, said vehicle having at least one door and having an ignition switch, the combination of, means to regulate the position of said control means for establishing and controlling the vehicle speed independent of foot pressure on the control means by the vehicle driver, restraining means to automatically render said positioning means inoperative and incapable of inadvertent operation with respect to said control means until said positioning means is activated deliberately by the vehicle operator, an electric circuit, said restraining means including electro-magnetic means connected in said circuit, and also including electric switch means in said circuit operated by said door to control said electro-magnetic means for causing said inoperative status of said positioning means when said door is opened, said circuit including said vehicle ignition switch therein arranged to

control said electro-magnetic means for also establishing said inoperative status of said positioning means when said ignition switch is turned off.

12. In a control device for an automotive vehicle having an engine and control means therefor, said vehicle having a transmission and selector means therefor movable into driving and non-driving positions, the combination of, means to regulate the position of said control means for establishing and controlling the vehicle speed independent of foot pressure on the control means by the vehicle driver, restraining means operated by said transmission selector means to automatically render said positioning means inoperative with respect to said engine control means when said transmission selector means is placed in at least one non-driving position, an electric circuit, said restraining means including electro-magnetic means in said circuit, and also including switch means in said circuit operated by said selector means for causing said inactivation of said positioning means when said transmission selector means is placed in said non-driving position, and safety means operatively associated with said restraining means to maintain said positioning means in said inoperative status when said transmission selector means is again moved into said driving position.

13. In a control device for an automotive vehicle including an engine and movable control means therefor, the combination of, a mechanism for setting said control means in selected fixed positions, said mechanism having speed-adjusting means comprising, a manually rotatable speed selector member mounted in the operator's compartment, said mechanism also including positioning means operatively connected to said speed selector member and including thread means to provide axial movements of said positioning means by rotation of said speed selector member for setting any desired said fixed position of said control means without visual inspection thereof, said thread means having a thread rate providing a relatively long travel of said positioning means for each rotation of said speed selector member, said last-named member including a single tactile indicator adjacent its periphery to indicate by the sense of touch the angular position of said selector member to enable the vehicle operator to select the approximate speed of said vehicle by feeling said angular position of said selector member without removing his sight from the road, and detent means operatively associated with said positioning means to provide a signal for indicating to the operator at least one axial position thereof corresponding to substantially one angular position of said tactile indicator at a particular revolution of said knob, corresponding to one memorized speed as a reference base.

14. In a control device for an automotive vehicle including an engine and movable control means therefor normally urged toward the idle-speed position by biasing means, and including an element having movements incident to normal operation of the vehicle the combination of, a mechanism for setting said control means in selected fixed positions, said mechanism having speed-adjusting means comprising a manually rotatable speed selector member mounted in the operator's compartment, said mechanism also including positioning means operatively connected to said speed selector member and including thread means to provide axial movements of said positioning means by rotation of said speed selector member for setting any desired said fixed position of said control means without visual inspection thereof, said thread means having a fast thread rate providing a relatively long travel of said positioning means for each rotation of said speed selector member, said last-named member including a single tactile indicator adjacent its periphery to indicate by the sense of touch the angular position of said selector member to enable the vehicle operator to select the approximate speed of said vehicle by feeling said angular position of said selector member without removing his sight from the road, said positioning means including means to effect automatic operative engagement of said positioning means and said control means after movement of said control means in an increase speed direction to a second position beyond said fixed position, said automatic engagement means being disposed to enable said biasing means to move said operatively engaged positioning means and control means in an idle speed direction to said fixed position for holding said control means therein, and restraining means responsive to said movements of said element to automatically render said positioning means incapable of inadvertent operation with respect to said control means until said positioning means is activated deliberately by the vehicle operator.

15. In a control device for an automotive vehicle having an engine, said vehicle having brake-actuating means and having engine control means normally urged toward the idle-speed position by biasing means, said vehicle also including a movable element always operated by the vehicle driver whenever said driver leaves the vehicle, the combination of means to hold said control means in any desired predetermined first position comprising, movable means including means for positioning said control means in said first position, release means operatively associated with said brake-actuating means to at least temporarily inactivate said positioning means with respect to said control means after a predetermined movement of said brake-actuating means, said movable means including means to effect automatic operative engagement of said positioning means and said control means after movement of said control means in an increase speed direction to a second predetermined position beyond said first position, and said last-recited means including means to enable said biasing means to move said operatively engaged positioning means and control means in an idle-speed direction to said first predetermined position for holding said control means in said first position, and restraining means responsive to said movements of said element to automatically render said positioning means inoperative and incapable of inadvertent operation with respect to said control means until said positioning means is activated deliberately by the vehicle driver.

16. In a control device for an automotive vehicle having an engine and control means therefor normally urged toward the idle speed position by biasing means, said vehicle having at least one door and having brake actuating means, the combination of means to hold said control means in any desired predetermined first position comprising, movable means including means for positioning said control means in said first position for establishing and controlling vehicle speed independent of foot pressure on the control means by the vehicle driver, release means operatively associated with said brake-actuating means to at least temporarily inactivate said positioning means with respect to said control means after a predetermined movement of said brake-actuating means, said movable means including means to effect automatic operative engagement of said positioning means and said control means after movement of said control means in an increase speed direction to a second predetermined position beyond said first position, and said last-recited means including means to enable said biasing means to move said operatively engaged positioning means and control means in an idle-speed direction to said first predetermined position for holding said control means in said first position, and restraining means operated by said door to automatically render said positioning means inoperative with respect to said control means when said door is opened and incapable of inadvertent operation after said door is again closed.

17. In a control device for an automotive vehicle having an engine and control means therefor and having brake-actuating means, said vehicle also including an element having movements incident to normal operation of the vehicle, the combination of, positioning means to regulate the position of said control means for establishing and controlling vehicle speed independent of foot pres-

sure on the control means by the vehicle driver, release means operatively associated with said brake-actuating means to at least temporarily inactivate said positioning means with respect to said control means after a predetermined movement of said brake-actuating means, restraining means responsive to said movements of said element to automatically render said positioning means inoperative and incapable of inadvertent operation with respect to said control means until said positioning means is activated deliberately by the vehicle driver, safety means including mechanical latch means associated with said restraining means to maintain said positioning means in said inoperative status after the vehicle is again in operation, and said safety means including manually operated means for releasing said latch means to enable the vehicle driver to deliberately release said positioning means from said inoperative status.

18. In a control device for an automotive vehicle having an engine and control means therefor and having brake-actuating means, said vehicle also including an element having movements incident to normal operation of the vehicle, the combination of, positioning means to regulate the position of said control means for establishing and controlling vehicle speed independent of foot pressure on the control means by the vehicle driver, release means operatively associated with said brake-actuating means to at least temporarily inactivate said positioning means with respect to said control means after a predetermined movement of said brake-actuating means, restraining means responsive to said movements of said element to automatically render said positioning means inoperative and incapable of inadvertent operation with respect to said control means until said positioning means is activated deliberately by the vehicle driver, safety means including permanent magnet means operatively associated with said restraining means to maintain said positioning means in said inoperative status by the force of said magnet means after the vehicle is again in operation, and manually operated means operatively associated with said safety means to enable the vehicle driver to overpower said magnetic force for deliberatley releasing said positioning means from said magnet means.

19. In a control device for an automotive vehicle having an engine, said vehicle having brake-actuating means and having engine control means normally urged toward the idle-speed position by biasing means, said vehicle also including an element having movements incident to normal operation of the vehicle, the combination of means to hold said control means in any desired predetermined first position comprising, movable means including means for positioning said control means in said first position, release means operatively associated with said brake-actuating means to at least temporarily inactivate said positioning means with respect to said control means after a predetermined movement of said brake-actuating means, said movable means including means to effect automatic operative engagement of said positioning means and said control means after movement of said control means in an increase speed direction to a second predetermined position beyond said first position, and said last-recited means including means to enable said biasing means to move said operatively engaged positioning means and control means in an idle-speed direction to said first predetermined position for holding said control means in said first position, restraining means responsive to said movements of said element to automatically render said positioning means inoperative and incapable of inadvertent operation with respect to said control means until said positioning means is activated deliberately by the vehicle driver, said restraining means being operable independently of said release means in rendering said positioning means inoperative or inactive, respectively, safety means operatively associated with said restraining means and disposed to be initiated as a result of said movements thereof for maintaining said positioning means in said inoperative status in relation to said control means after said vehicle is again placed in operation, and said safety means including manual release means requiring the vehicle driver to consciously release manually said safety means for enabling activation of the control device at least each time the vehicle is first operated.

20. In a control device for an automotive vehicle having an engine and control means therefor normally urged toward the idle speed position by biasing means, said vehicle having at least one door and having brake actuating means, the combination of means to hold said control means in any desired predetermined first position comprising, movable means including means for positioning said control means in said first position for establishing and controlling vehicle speed independent of foot pressure on the control means by the vehicle driver, release means operatively associated with said brake-actuating means to at least temporarily inactivate said positioning means with respect to said control means after a predetermined movement of said brake-actuating means, said movable means including means to enable automatic operative engagement of said positioning means and said control means after movement of said control means in an increase speed direction to a second predetermined position beyond said first position, said last-recited means including means to enable said biasing means to move said operatively engaged positioning means and control means in an idle-speed direction to said first predetermined position for holding said control means in said first position, restraining means operated by said door to automatically render said positioning means inoperative with respect to said control means when said door is opened, safety means operatively associated with said restraining means for maintaining said positioning means for maintaining same in said inoperative status in relation to said control means after said vehicle is again placed in operation, and said safety means including manual release means requiring the vehicle driver to consciously release manually said safety means for enabling activation of the control device at least each time the vehicle is first operated.

21. In a control device for an automotive vehicle having an engine, said vehicle having brake-actuating means and having engine control means including accelerator means in the vehicle driver compartment normally urged toward the idle-speed position by biasing means, said vehicle also including an element having movements incident to normal operation of the vehicle, the combination of means to hold said accelerator means in any desired predetermined first position comprising, movable means including means mounted in said vehicle driver compartment for positioning said accelerator means in said first position for establishing and controlling vehicle speed independent of foot pressure on the control means by the vehicle driver, release means operatively associated with said brake-actuating means to at least temporarily inactivate said positioning means with respect to said accelerator means after a predetermined movement of said brake-actuating means, said movable means including means to effect automatic operative engagement of said positioning means and said accelerator means after movement of said control means in an increase speed direction to a second predetermined position beyond said first position, said last-recited means including means to enable said biasing means to move said operatively engaged positioning means and accelerator means in an idle-speed direction to said first predetermined position for holding said accelerator means in said first position, restraining means responsive to said movements of said element to automatically render said positioning means inoperative and incapable of inadvertent operation with respect to said accelerator means until said positioning means is activated deliberately by the vehicle driver, safety means operatively associated with said restraining means and disposed to be operatively connected to said positioning means for

maintaining same in said inoperative status in relation to said accelerator means after said vehicle is again placed in operation, and said safety means including manual release means requiring the vehicle driver to consciously release manually said safety means for enabling activation of the control device at least each time the vehicle is first operated.

22. In a control device for an automotive vehicle having an engine and control means for said engine, said vehicle also having brake-actuating means and having at least one door manually movable by the vehicle operator, the combination comprising, means operatively associated with said control means to regulate the position thereof for establishing the speed of the vehicle independent of foot pressure on said control means by said operator, release means operated by said brake-actuating means to at least temporarily inactivate said positioning means with respect to said control means after a predetermined travel of said brake-actuating means, and restraining means operated by said manual movements of said door to automatically render said positioning means inoperative with respect to said control means when said door is opened.

23. In a control device for an automotive vehicle having an engine and control means for said engine, said vehicle also having brake-actuating means and having at least one door manually movable by the vehicle operator, the combination comprising, means operatively associated with said control means to regulate the position thereof for establishing the speed of the vehicle independent of foot pressure on said control means by said operator, said positioning means including means to effect automatic operative engagement of said positioning means and said control means after movement of said control means in an increase-speed direction by the vehicle operator, release means operated by said brake-actuating means to at least temporarily inactivate said positioning means with respect to said control means after a predetermined travel of said brake-actuating means, restraining means operated by said manual movements of said door to automatically render said positioning means inoperative with respect to said control means when said door is opened, and safety means operatively associated with said restraining means to maintain said positioning means in said inoperative status when said door is closed.

24. In a control device for an automotive vehicle having an engine and control means for said engine, said vehicle having at least one door, the combination of, means to regulate the position of said control means for establishing the speed of the vehicle independent of foot pressure on said control means by the vehicle driver, restraining means to automatically render said positioning means inoperative and incapable of inadvertent operation with respect to said control means until said positioning means is activated deliberately by the vehicle driver, an electric circuit, said restraining means including electro-magnetic means connected in said circuit, and also including electric switch means in said circuit operated by said door to energize said electro-magnetic means for rendering said positioning means inoperative when said door is opened, and to de-energize said electro-magnetic means when said door is closed without releasing said positioning means from said inoperative status.

25. In a control device for an automotive vehicle having an engine and control means for said engine, said vehicle also having brake-actuating means and having at least one door manually movable by the vehicle operator, said vehicle also including an electric circuit having a source of electric energy and an electric light in said circuit mounted in the interior of the vehicle and switch means in said circuit operated by the door when opened to energize said light and to de-energize said light when said door is closed, the combination comprising, means operatively associated with said control means to regulate the position thereof for establishing the speed of the vehicle independent of foot pressure on said control means by said operator, release means operated by said brake-actuating means to at least temporarily inactivate said positioning means with respect to said control means after a predetermined travel of said brake-actuating means, and restraining means including electro-magnetic means in said circuit operated by said switch means when said door is opened to automatically render said positioning means inoperative with respect to said control means.

26. In a control device for an automotive vehicle having an engine and control means for said engine, said vehicle also having brake-actuating means and having at least one door manually movable by the vehicle operator, said vehicle also including an electric circuit having a source of electric energy and an electric light in said circuit mounted in the interior of the vehicle and switch means in said circuit operated by the door when opened to energize said light and to de-energize said light when said door is closed, the combination comprising, means operatively associated with said control means to regulate the position thereof for establishing the speed of the vehicle independent of foot pressure on said control means by said operator, release means operated by said brake-actuating means to at least temporarily inactivate said positioning means with respect to said control means after a predetermined travel of said brake-actuating means, said positioning means being disposed to enable automatic operative engagement of said positioning means and said control means after movement of said control means in an increase-speed direction by the vehicle operator, restraining means including electro-magnetic means in said circuit operated by said switch means when said door is opened to automatically render said positioning means inoperative with respect to said control means, and safety means operatively associated with said restraining means and initiated upon said energization of said electro-magnetic means to maintain said positioning means in said inoperative status, said safety means including manually operated means to enable the vehicle operator to consciously release said positioning means from said inoperative status.

27. In a control device for an automotive vehicle having an engine and control means for said engine, said vehicle also having brake-actuating means and having at least one door manually movable by the vehicle operator, said vehicle also including an electric circuit having a source of electric energy and an electric light in said circuit mounted in the interior of the vehicle and switch means in said circuit operated by the door when opened to energize said light and to de-energize said light when said door is closed, the combination of, means operatively associated with said control means to regulate the position thereof for establishing the speed of the vehicle independent of foot pressure on said control means by said operator, said positioning means including means to enable automatic operative engagement of said positioning means and said control means after movement of said control means in an increase-speed direction by the vehicle operator, release means operated by said brake-actuating means to temporarily inactivate said positioning means respect to said control means without rendering same inoperative after a predetermined travel of said brake-actuating means, and restraining means including electro-magnetic means in said circuit controlled by said switch means when said door is opened to automatically render said positioning means inoperative with respect to said control means, said electro-magnetic means being completely separate from and operable independently of said release means in rendering said positioning means inoperative.

28. In a control device for an automotive vehicle having an engine and control means for said engine, said vehicle also having brake-actuating means and having at least one door manually movable by the vehicle operator, the combination comprising, means operatively associated

with said control means to regulate the position thereof for establishing the speed of the vehicle independent of foot pressure on the control means by said operator, release means operated by said brake-actuating means to at least temporarily inactive said positioning means with respect to said control means after a predetermined travel of said brake-actuating means, restraining means operated by said manual movements of said door to automatically render said positioning means inoperative with respect to said control means when said door is opened, said restraining means being completely separate from and operable independently of said release means in rendering said positioning means inoperative or inactive, respectively, safety means activated by said restraining means upon its said operation in response to said movements of said door to maintain said positioning means in said inoperative status in relation to said control means independent of subsequent closing of said door, and said safety means including manually operated means to enable the vehicle operator to consciously release said positioning means from said inoperative status.

29. In a control device for an automotive vehicle having an engine and control means for said engine, said vehicle having at least one door movable in an opening and closing direction, the combination of; means operatively associated with said engine control means to regulate the position thereof for establishing and controlling

vehicle-speed independent of foot pressure on the control means by the vehicle driver, restraining means operated by said door to automatically render said positioning means inoperative with respect to said control means when said door is opened, and safety means including permanent magnet means operatively associated with said restraining means to maintain said positioning means in said inoperative status when said door is again closed.

References Cited by the Examiner

UNITED STATES PATENTS

2,186,620	1/40	Aprea et al.	
2,609,074	9/52	Leihgeber	192—3
2,740,947	4/56	Davies.	
2,853,164	9/58	Sturdy	192—3
2,890,596	6/59	Hatchett	192—3 X
2,912,082	11/59	Wooten	192—3
2,917,142	12/59	Thorner	192—3
2,942,680	6/60	Miller et al.	180—82
2,945,546	7/60	Niederoest	180—82
2,960,885	11/60	Donaldson	74—513 X
3,070,183	12/62	Horton	180—82

A. HARRY LEVY, *Primary Eaxminer.*

BENJAMIN HERSH, PHILIP ARNOLD, *Examiners.*