(No Model.) 2 Sheets—Sheet 1.

F. W. MERRICK.

PRESSER FOOT LIFTING MECHANISM FOR SEWING MACHINES.

No. 590,726. Patented Sept. 28, 1897.

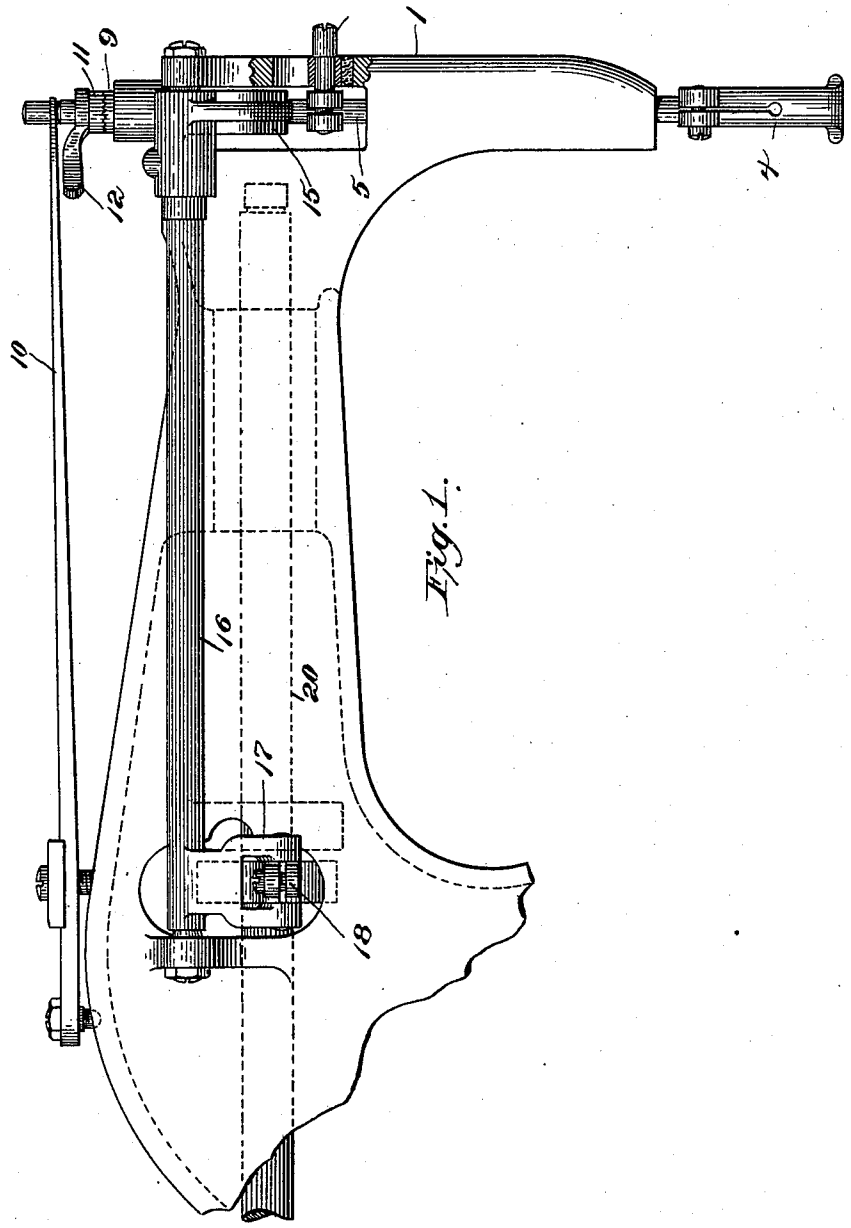

Fig. 1.

Witnesses:
Oscar F. Hill
Robert Wallace.

Inventor:
Frank W. Merrick
by Macleod Calver & Randall
his Attorneys.

THE NORRIS PETERS CO., PHOTO-LITHO., WASHINGTON, D. C.

(No Model.) 2 Sheets—Sheet 2.

F. W. MERRICK.

PRESSER FOOT LIFTING MECHANISM FOR SEWING MACHINES.

No. 590,726. Patented Sept. 28, 1897.

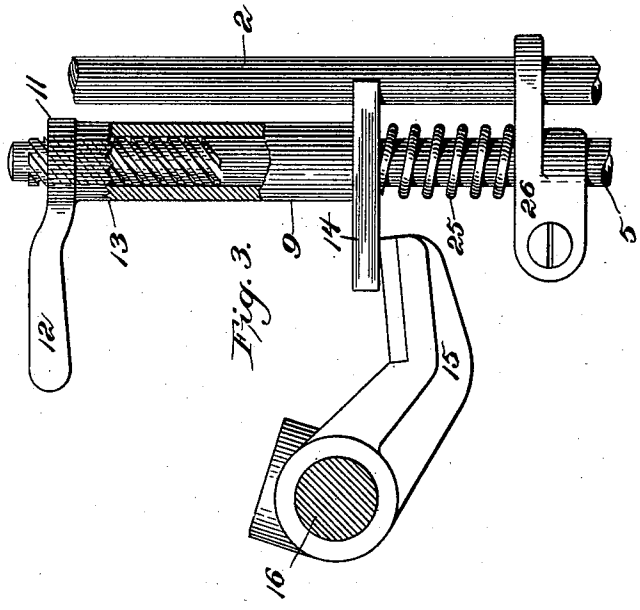

Fig. 3.

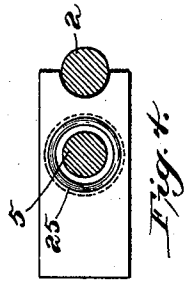

Fig. 4.

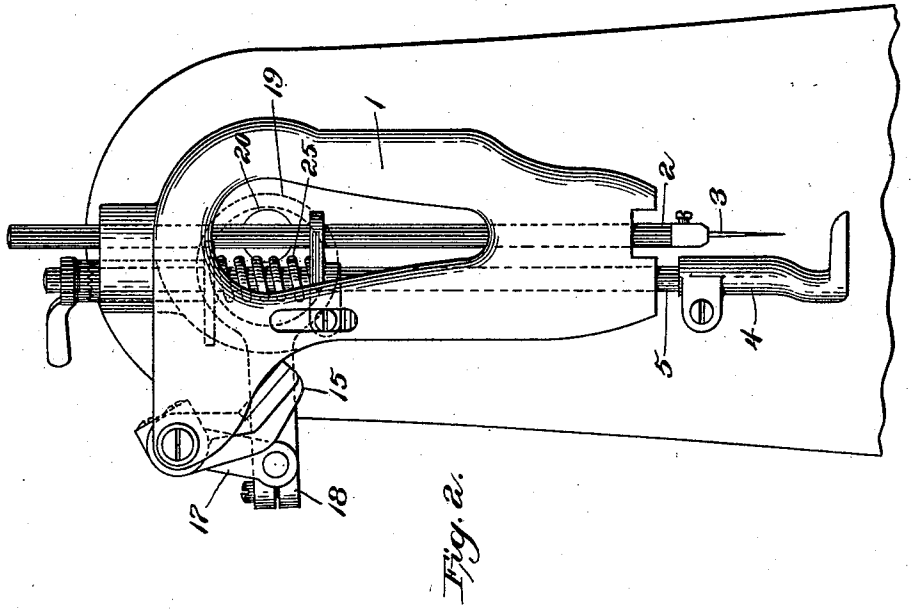

Fig. 2.

Witnesses:
Oscar F. Hill
Robert Wallace.

Inventor:
Frank W. Merrick,
by Macleod Calvert Randall
his attorneys.

THE NORRIS PETERS CO., PHOTO-LITHO., WASHINGTON, D. C.

UNITED STATES PATENT OFFICE.

FRANK W. MERRICK, OF BOSTON, MASSACHUSETTS.

PRESSER-FOOT-LIFTING MECHANISM FOR SEWING-MACHINES.

SPECIFICATION forming part of Letters Patent No. 590,726, dated September 28, 1897.

Application filed March 16, 1896. Serial No. 583,476. (No model.)

To all whom it may concern:

Be it known that I, FRANK W. MERRICK, a citizen of the United States, residing at Boston, in the county of Suffolk and State of Massachusetts, have invented certain new and useful Improvements in Presser-Foot-Lifting Mechanism for Sewing-Machines, of which the following is a specification, reference being had therein to the accompanying drawings.

My invention has for its object to provide a presser-foot-lifting mechanism for sewing-machines which may be quickly and easily adjusted by the operator to work on any thickness of stock which may be in the machine.

The invention consists in a device constructed and arranged as hereinafter fully set forth and the novel features of which are pointed out and clearly defined in the claims at the close of this specification.

In the accompanying drawings, to which reference is made in the following description, Figure 1 is a view in elevation, representing the head of a sewing-machine with my invention applied thereto. Fig. 2 is an end view of the parts shown in Fig. 1 from the right of the latter figure. Fig. 3 is a detail of the essential parts of my improved mechanism detached. Fig. 4 is a view in horizontal section on a line in Fig. 3 just above the cross-piece 14.

At 1 is represented the head of a sewing-machine, at 2 the awl-bar, at 3 the awl carried by said awl-bar, at 4 the presser-foot, and at 5 the presser-bar. The machine is provided, preferably, with the usual lever operated by the foot for lifting the presser-foot and presser-bar when desired and also with the usual hand-operated lever, by which the operator is enabled to raise the presser-foot by hand when desired. These parts I do not deem it necessary to describe, as they are of well-known construction. In like manner the awl-bar is operated in any well-known or suitable manner.

At 9 is a collar or sleeve which surrounds the upper end of the presser-bar 5, the said collar or sleeve being preferably fitted to a bearing provided therefor in the upper part of the head 1 and being free to slide up and down in such bearing. The upper extremity of the presser-bar 5 extends above the upper end of the said sleeve and is borne upon by the free end of a leaf-spring 10, which latter is secured to the arm or frame of the machine, as shown in Fig. 1. The said spring 10 acts to hold the presser-foot 4 normally pressed upon the upper surface of the work. The upper end of the presser-bar 5 is threaded to receive a nut 11, which has projecting therefrom an arm 12, by means of which the nut may be readily turned by the hand of the operator. The lower face of the nut 11 is serrated, as shown at 13, the serrations therein fitting corresponding serrations in the upper end of the sleeve 9. The lower end of the said sleeve 9 is provided with a cross-piece 14, preferably integral therewith, one end of which is forked or grooved to engage the awl-bar 2, thus serving to guide the sleeve 9 in its vertical movement and to prevent it from rotating relatively to the presser-bar. The opposite end of the cross-piece 14 projects from the sleeve 9 into the path of movement of the lifting-arm 15, which is mounted upon the rock-shaft 16. The rock-shaft 16 is mounted on center bearings in the frame of the machine and is provided with an arm 17, preferably at the opposite end thereof from that on which the lifting-arm 15 is secured. Said arm 17 is pivoted to the arm 18 of an eccentric 19 on the main shaft 20, so that at each revolution of the main shaft the lifting-arm is reciprocated. Adjusting devices of well-known construction may be used in connection with the mechanism which actuates the rock-shaft 16 to vary the throw of the lifting-arm. Such devices are of well-known construction, and I do not deem it necessary to describe them in detail.

Below the cross-piece 14 at the lower end of the sleeve 9 I place a spiral spring 25 on the presser-bar 5, said spring being located between the said cross-piece 14 and the block 26, which is rigidly secured to the said presser-bar. The spring 25 serves to hold the sleeve 9 pressed upwardly, so that the serrations in the upper end of said sleeve will be in engagement with the serrations on the lower face of the nut 11. If now the nut 11 be turned by the operator, the serrations upon the lower face thereof will be caused to slip over the serrations on the upper end of the sleeve 9—that is, a slight power applied to

the arm 12 to turn the nut 11 will cause the serrations to slip upon each other—the sleeve 9 being depressed against the pressure of the spring 25 to permit the slipping to take place. It will thus be clear that by turning the nut 11 the operator may adjust the sleeve 9, and it will also be clear that if said nut is turned so as to cause the nut to move downwardly on the threaded end of the presser-bar the bar will be lifted relatively to the sleeve 9 and cross-piece 14 and the foot will be correspondingly lifted from the work-plate to adjust the height of said foot for thicker work. If the nut 11 be turned in the opposite direction, the presser-foot may in like manner be adjusted for thinner work. As the throw of the lifting-arm 15 is constant regardless of the position of the presser-bar relatively to the sleeve 9 and cross-piece 14, the presser-foot will be lifted at each revolution of the main shaft a uniform distance whether it be set on thicker or thinner work. It will also be noted that the serrations on the lower face of the nut 11, engaging with those on the upper end of the sleeve, prevent the nut from turning and thus from accidentally shifting the relation of the presser-bar and sleeve.

By the employment of this device a very speedy and easy adjustment of the presser-foot for any thickness of work may be effected.

What I claim is—

1. The combination with the fixed head of a sewing-machine, the presser-foot, and the presser-bar, of a collar or sleeve constituting a movable bearing for the presser-bar, the said movable bearing being fitted to the said head with capacity to move vertically therein, lifting mechanism operating to lift said bearing and presser-bar, and means of adjustment acting in connection with said collar or sleeve whereby to vary the lift of the presser-bar and presser-foot, substantially as described.

2. In combination, a presser-bar, a projection movably connected with the presser-bar, a lifting device to engage said projection, and an adjusting device to vary the height of said projection on the presser-bar, the said adjusting device having a toothed retainer to prevent loss of adjustment, substantially as described.

3. The combination with the fixed head of a sewing-machine, the presser-foot and the presser-bar of a collar or sleeve constituting a movable bearing for the presser-bar, the said movable bearing being fitted to the said head with capacity to move vertically thereon, a nut on said bar engaging said bearing to vertically adjust the same relatively to said bar, and lifting mechanism to engage said bearing to lift the presser-bar, substantially as set forth.

4. The combination with the presser-foot and presser-bar of a sewing-machine, of a movable bearing for the presser-bar, a nut on said presser-bar engaging said movable bearing to adjust the same relatively to the said presser-bar, a spring to hold said bearing in engagement with said nut and lifting mechanism coöperating with said bearing to lift the presser bar and foot, substantially as set forth.

5. The combination with the presser-foot and presser-bar of a sewing-machine of a movable bearing for the presser-bar, said movable bearing having serrations on the upper end thereof, a nut on said presser-bar having serrations thereon engaging the serrations on said movable bearing, a spring which operates to hold said movable bearing in contact with said nut and lifting mechanism for engaging said bearing to lift the presser-bar and presser-foot, substantially as set forth.

In testimony whereof I affix my signature in presence of two witnesses.

FRANK W. MERRICK.

Witnesses:
WM. A. MACLEOD,
A. W. HARRISON.