Jan. 16, 1951 J. C. PONSTINGL ET AL 2,538,038

PNEUMATIC TIME LIMIT CONTACTOR

Filed Jan. 19, 1949 2 Sheets-Sheet 1

Fig. 1.

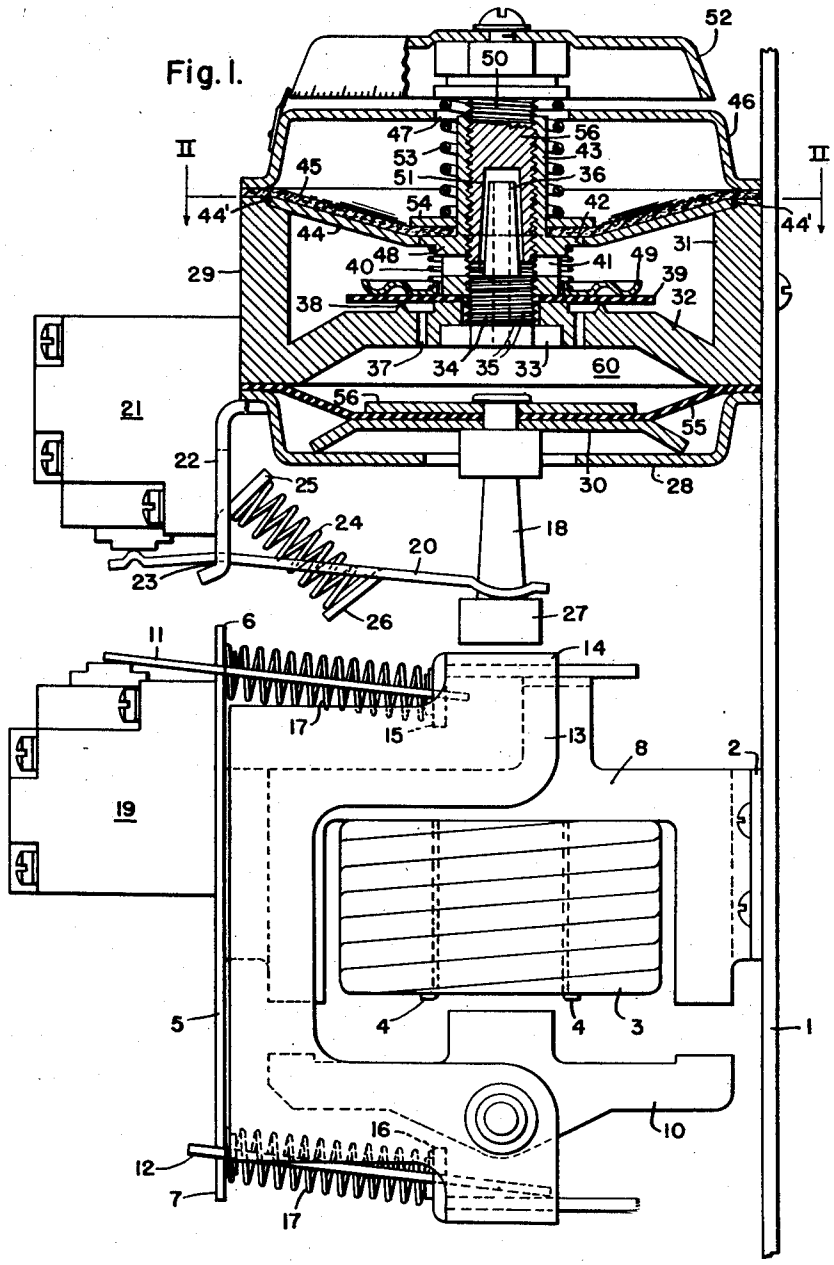

WITNESSES:

Edward Michaels

Wm. C. Groome

INVENTORS
JOHN C. PONSTINGL &
RALPH B. IMMEL.
BY
Paul E. Friedemann
ATTORNEY

Jan. 16, 1951 J. C. PONSTINGL ET AL 2,538,038

PNEUMATIC TIME LIMIT CONTACTOR

Filed Jan. 19, 1949 2 Sheets-Sheet 2

Fig.2.

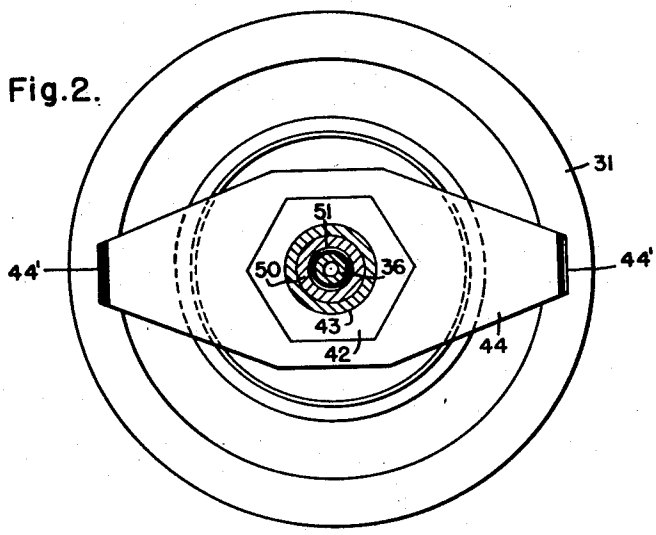

Fig.3.

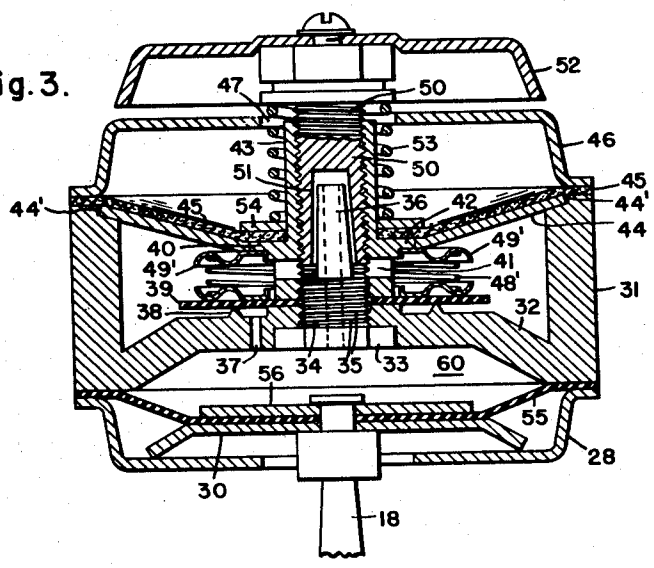

WITNESSES:

Edward Michaels

Wm. C. Groome

INVENTORS
JOHN C. PONSTINGL &
RALPH B. IMMEL.
BY
Paul E. Friedemann
ATTORNEY

Patented Jan. 16, 1951

2,538,038

UNITED STATES PATENT OFFICE

2,538,038

PNEUMATIC TIME LIMIT CONTACTOR

John C. Ponstingl and Ralph B. Immel, Pittsburgh, Pa., assignors to Westinghouse Electric Corporation, East Pittsburgh, Pa., a corporation of Pennsylvania

Application January 19, 1949, Serial No. 71,726

12 Claims. (Cl. 161—1)

1

Our invention relates to time limit devices for movable mechanisms and more particularly to pneumatic time limit, or timing, apparatus for electric switches, such as electromagnetic contactors.

We are aware that time limit devices for electromagnetic contactors are well known in the art but such devices are as a rule complicated, expensive, and often, by reason of the complexity of the apparatus it would seem, not too reliable. Further, if means for adjusting the time period are provided, no great dependence can be placed on such adjustment to give uniform time of operation.

One broad object of our invention is the provision of a pneumatic timing relay that is less expensive and more reliable than generally similar pneumatic timing relays now on the market.

A more specific object of our invention is the provision of special, simple, and effective valve means for pneumatic devices of the character used for timing the operation of auxiliary contacts, or relays, for electric switches, such as electromagnetic contactors.

Another object of our invention is the provision of a timing device that is simple in structure, reliable in operation and will provide substantially uniform timing within the range of adjustment of the timing cycle.

The objects stated are merely illustrative. Other objects and advantages will become more apparent from a study of the following specification and the accompanying drawings, in which:

Fig. 1 is a side view of a preferred embodiment of our invention with the pneumatic apparatus shown in longitudinal section;

Fig. 2 is a view in transverse section on section line II—II of Fig. 1; and

Fig. 3 is a view in longitudinal section of a modification of our invention.

In Fig. 1 of the drawings, the base 1 represents the mounting for our device. The E-shaped magnet shown is provided with a pair of outer heavy laminations having the flanges 2 for securing the magnet to the base.

The magnet is so mounted on the base 1 that the open part of the E faces downwardly and the stem, or back, 8 of the E projects horizontally from the base. This disposition of the parts is the usual position but we are not restricted to any such mounting.

The middle leg of the E carries the energizing coil 3 held in place by suitable retaining springs 4. To the most forward leg we secure the generally rectangular plate 5. This plate is provided with

2

tabs, or tongues, 6 and 7 that project beyond the upper surface of the horizontal stem 8 and the lower surface of the armature 10. These tabs are undercut at the junction of the tab with the main portion of the rectangular plate 5. The undercut region is designed on each tab to receive, respectively, the inner front edge of the frames 11 and 12.

The frames 11 and 12 have a generally picture-frame appearance and are selected of quite thin tough sheet metal to thus in effect act as knife-edge bearings on the tab necks when the parts are assembled as shown in Fig. 1.

The armature operator frame 13 is built up of two parts identical in shape manufactured from a single die. The right-hand part, viewing the showing in Fig. 1 from the left, is a generally U-shaped flat member having outwardly directed feet connected to the ends of the legs of the U. The upper foot has a toe 14 bent at right angles toward the left. The toe is provided with a downwardly directed projection 15 over which the rear end of the frame 11 is hooked.

The left-hand member of the operator is turned through 180 degrees on a horizontal axis normal to base 1. This means that the toe and projections are at the bottom and the frame 12 is hooked over the projection 16. Springs 17 are disposed between the tabs and projections and thus hold the operator in such relation to plate 5 that the operator may move vertically.

The armature 10 is pivotally mounted at the lower end of the operator. When the coil 3 is energized the armature 10 and thus the operator 13 moves vertically to actuate the stem 18 vertically. The frame 11 operates the make interlock 19 and the stem 18 through the action of the lever 20 actuates the break interlock 21.

The lever 20 is pivoted on bracket 22 at 23 and is spring biased to the position shown by the compression spring 24 acting between the stops 25 and 26. The right end of the lever 20 is bifurcated and disposed to straddle the stem 18 so as to engage the head 27 and thus force the head to the position shown. The limit of movement of the stem is determined by the bottom closure 28 of the pneumatic device 29, coacting with the downwardly directed periphery of the washer 30.

The pneumatic device 29 comprises a housing 31 rigidly secured to the base 1 in suitable relation to the electromagnetic contactor shown. The housing is provided with a bottom 32 dished upwardly as shown. The bottom face is provided with a hexagonal recess for receiving the hexagonal head 33 of the valve sleeve 34. This sleeve

34 has a cylindrical threaded portion 35 and upper finger end 36 in the shape of the frustum of a cone. The axial opening is of uniform circular section for the entire length of the sleeve. The finger end 36 has a very slight taper to provide for accurate time limit adjustment.

The bottom 32 is also provided with one or several openings 37 and an annular valve seat 38 in the upper surface. An annular valve 39 of neoprene, rubber, or other rubber-like material and selected of material that is quite thin and light weight, is disposed against the valve seat 38.

A sleeve nut 40, having the transverse channel 41, internal threads as shown, the hexagonal portion 42, and the upward stem 43, is threaded on the valve sleeve 34. To tighten the nut 40 a suitable wrench is used to force the bottom of the nut 40 against the valve 39 to firmly hold this valve 39 in fluid tight position on the sleeve member 34 and on the bottom 32. After the nut 40 is in proper position the lock element 44 having an opening in the mid-portion to fit the nut 40 like a wrench is placed over the nut and the ends of the lock are placed in the notches 44'.

The screen 45 is disposed over the locking element 44. The screen is, at its outer periphery, held firmly on the casing 31 and at its center is firmly held between the nut 40 and the washer 54. This screen is made of loose felt, or other material that can be used to exclude all dust and dirt from the region below the screen and yet permit free flow of air through the screen.

The casing 31 is provided with notches 44' at its upper inner edge of its side wall for receiving the outer ends of the locking element 44 to prevent rotation of the sleeve nut 40 once it has been placed in position. A cap 46 having the central opening 47 is secured to the upper edge of the side walls of the casing 31 and holds the screen 45 in position.

A compression spring 48 is disposed between a shoulder on 42 and the annular member 49 shaped as shown. This spring 48 holds the annular member 49 in concentric spaced relation to the sleeve nut 34 and provides a backing for the valve 39.

A stem 50 having a tapered recess 51 to fit the tapered upper end of sleeve valve 34 is threaded into the upper stem 43 of the nut 40. To the upper end of this stem 50 we rigidly secure the hood 52. A compression spring 53, under some compression, is disposed between the bottom of the hood 52 and a washer 54 disposed over the screen 45. This spring 53 is thus instrumental in holding the hood to any position of adjustment.

The outer downwardly sloping periphery of the hood is provided with graduations that coact with an index on the outer sloping periphery of the cap 46. By axially adjusting the stem 50 it is apparent that fluid flow, through the path including the channel 41, the recess 51 and the axial opening in sleeve valve 34, may be restricted to any rate of flow from wide open to closed position.

The bottom closure 28 is firmly secured to the bottom of the housing 31. A diaphragm 55 of flexible material such as rubber, or neoprene, has its outer periphery disposed between the closure 28 and the bottom of the casing 31 to form a fluid tight connection. To the center of the diaphragm we secure the stem 18 as shown. The washers 30 and 56 provide a backing for the diaphragm. The connection to the stem is made leak proof against any fluid. The diaphragm 55 and the bottom 32 of the casing 31 thus form a closed fluid containing chamber, or compression chamber 60. The fluid we use is often the air of the atmosphere, but our device may be used with other fluids such as other gases, and also liquids as ore, water, and similar liquids.

The operation of our device is, briefly stated as follows:

Energization of coil 3 operates the stem 18 vertically. The air trapped in the compression chamber 60 is thus forced out through the openings 37. The valve 39 lifts readily off the seat 38 for this pressure relief operation. The instant the vertically upward movement of stem 18 is completed the valve ring 39, which is in effect a check valve, moves against the seat 38. At any time thereafter when the coil 3 is deenergized the armature 10 and operator 13 drop to the position shown. The stem 18 does, however, not follow because free flow of air to the compression chamber is not permitted.

The spring 24 urges the stem 18 and thus the diaphragm downward, but the rate of the downward movement is determined by the rate at which air flows from the region above the bottom 32 through the channel 41, the space between the conical projection 36 and the walls of the recess 51 and the channel axially of the sleeve valve 34 to the compression chamber 60. The rate of flow is, of course, also determined by the adjustment of the stem 50 in the sleeve 43. The adjustment may be from wide open, and thus substantially zero time, to a restriction such that fifteen minutes may transpire before the lever 20 actuates interlock 21. The graduations on the hood 52 disposed in registry with an index on the cover 46 indicate the time delay that will be obtained.

The modification shown in Fig. 3 is like the main embodiment of our invention in every respect for the spring biasing structure for the rubber valve ring 39. The same reference characters are applied to this modification to all the elements that have the same structure and function.

To provide a spring bias for the valve ring 39 we dispose a spring 48' in the outer annular depressions of the annular member 49 and 49'. For some types of material for the valve ring 39 the construction shown in Fig. 3 may provide a more effective check valve.

While we have shown but two embodiments of our invention we do not wish to be limited to the showings made. What limitations there may be to our contribution to the art is a matter to be determined from the language of the claims hereto appended.

We claim as our invention:

1. In a pneumatic device, in combination, a horizontally disposed cup-shaped member having an upwardly dished bottom, a flexible diaphragm secured at its periphery to the bottom edge of the cup-shaped member to thus with the upwardly dished bottom form a compression chamber, a diaphragm actuating element secured to the diaphragm to thus by its weight bias the diaphragm to provide a maximum volume for the compression chamber, a projection projecting upwardly from the bottom, said projection having a relatively small axial opening, a threaded cylindrical portion near its base, and a tapered upper end, said bottom being provided with an opening near the projection, a valve seat disposed about the opening, an annular valve of relatively thin rubber-like material disposed loosely over the threaded portion of the projection and engaging the valve seat, a sleeve nut threaded on the

threaded cylindrical portion to grip the valve to provide a sealed connection, said sleeve nut being provided with a flange having a downwardly directed shoulder in spaced relation to the valve, said sleeve nut being provided with a radial channel so disposed below the shoulder that the channel, in use, falls directly above the threaded cylindrical portion, a washer disposed on the valve, a compression spring disposed between the shoulder and the washer to thus bias the valve against the valve seat, a stem threaded into the sleeve nut, said stem at its bottom end being provided with a tapered recess matching the tapered projection, and means secured to the stem and coacting with said member for indicating the position of the stem with reference to the tapered projection.

2. An electric contactor including in combination, a vertically reciprocable member, electromagnetic means for actuating said member against its gravity bias, vertically upward, switching means actuated upon vertical upward movement of said member to one operative position and upon return movement of said member to another operative position, a plate disposed horizontally above said member, said plate being dished downwardly at the edges, a diaphragm of flexible material at its edge hermetically secured to the downwardly dished portions of the plate to thus form a compression chamber, a connection between the member and the central portion of the diaphragm, whereby vertically upward movement of the member, and thus the diaphragm, compresses the fluid in the compression chamber, said plate being provided with a central opening and at least one other opening in close proximity to the central opening, a plug having a polygonal head fitting in a matching recess in the bottom surface of the plate, a threaded cylindrical portion, and a tapered upper end, disposed in said central opening so as to project the tapered end away from the compression chamber, a valve seat in the shape of a closed ridge encircling the central opening and the said other opening, an annular valve of relatively thin flexible material disposed to fit over the cylindrical portion and to engage the valve seat, a sleeve nut, having a radial opening, threaded on the cylindrical portion to provide a sealed connection between the inner edge of the valve and the plug, said sleeve nut being provided with a flange spaced from the lower end, a washer, having a concave groove in the lower face, so disposed over the valve that the groove falls over the valve seat, a compression spring between the flange and washer to provide a soft downward bias to the valve against the seat, a spider disposed to engage the flange and notches in the plate to prevent turning of the sleeve nut after the spider is in position, a screen disposed over the spider with its edge connected to the plate to prevent dust from entering the valve, a stem threaded into the sleeve nut, said stem having a recess matching the tapered end of the plug, whereby rotation of the stem will cause the stem to move to any selected position with respect to the tapered end of the plug to thus restrict the flow of fluid into the compression chamber, a cap, having graduations thereon, secured to the stem, an index fixed with reference to the plate coacting with the graduations to indicate the time delay in movement of the diaphragm from its actuated position to a position providing the maximum volume for the compression chamber.

3. An electric contactor including in combination, a vertically reciprocable member, electromagnetic means for actuating said member against its gravity bias, vertically upward, switching means actuated upon vertical upward movement of said member to one operative position and upon return movement of said member to another operative position, a plate disposed horizontally above said member, said plate being dished downwardly at the edges, a diaphragm of flexible material at its edge hermetically secured to the downwardly dished portions of the plate to thus form a compression chamber, a connection between the member and the central portion of the diaphragm, whereby vertically upward movement of the member, and thus the diaphragm, compresses the fluid in the compression chamber, said plate being provided with a central opening and at least one other opening in close proximity to the central opening, a plug having a polygonal head fitting in a matching recess in the bottom surface of the plate, a threaded cylindrical portion, and a tapered upper end, disposed in said central opening so as to project the tapered end away from the compression chamber, a valve seat in the shape of a closed ridge encircling the central opening and the said other opening, an annular valve of flexible material disposed to fit over the cylindrical portion and to engage the valve seat, a sleeve nut, having a radial opening, threaded on the cylindrical portion to provide a sealed connection between the inner edge of the valve and the plug, said sleeve nut being provided with a flange spaced from its lower end, a washer, having a concave groove in its lower face, so disposed over the valve that the groove falls over the valve seat, a compression spring between the flange and washer to provide a downward bias to the valve, a stem threaded into the sleeve nut, said stem having a recess in its bottom end matching the tapered end of the plug, and means for indicating the axial position of the stem, in terms of units of time delay to fluid flow through the tapered recess, with reference to the tapered projection.

4. An electric contactor including in combination, a vertically reciprocable member, electromagnetic means for actuating said member against its gravity bias, vertically upward, switching means actuated upon vertical upward movement of said member to one operative position and upon return movement of said member to another operative position, a plate disposed horizontally above said member, said plate being dished downwardly at the edges, a diaphragm of flexible material at its edge hermetically secured to the downwardly dished portions of the plate to thus form a compression chamber, a connection between the member and the central portion of the diaphragm, whereby vertically upward movement of the member, and thus the diaphragm, compresses the fluid in the compression chamber, said plate being provided with a central opening and at least one other opening in close proximity to the central opening, a plug having a polygonal head fitting in a matching recess in the bottom surface of the plate, a threaded cylindrical portion, and a tapered upper end, disposed in said central opening so as to project the tapered end away from the compression chamber, a valve seat in the shape of a closed ridge encircling the central opening and the said other opening, an annular valve of relatively thin rubber-like material disposed loosely over the cylindrical portion of the plug, said valve having a diameter of sufficient magnitude that the valve edge extends beyond the valve seat, a sleeve nut threaded

onto the threaded cylindrical portion to firmly hold the plug in position and to grip the inner edge of the valve between the plate and the sleeve nut to provide a hermetic seal at the central opening, said plug being provided with an axial opening, said sleeve nut being provided with a flange having a downwardly directed shoulder in spaced relation to the valve, said sleeve nut being provided with a transverse channel below the shoulder and in such position that the channel falls above the threaded cylindrical portion of the plug, a concentrically corrugated washer disposed on top of the valve, a spring disposed between the shoulder on the sleeve nut and the washer to provide a bias for the valve against the valve seat, said washer being so positioned that a downwardly directed concave surface is in registry with the valve seat, said plate being provided with upwardly directed sidewalls to provide a cup-shaped structure above the plate, a screen, to prevent dust from getting into the valve region, disposed to fit at its inner region on the top of said flange and at its periphery being secured to the upper edge of said side walls, a stem threaded into the sleeve nut, said stem having a recess matching the tapered end of the plug, whereby rotation of the stem will cause the stem to move to selected positions with respect to the tapered end of the plug to thus restrict the flow of fluid into the compression chamber, and means for indicating the position of adjustment of said stem.

5. An electric contactor including in combination, a vertically reciprocable member, electromagnetic means for actuating said member against its gravity bias, vertically upward, switching means actuated upon vertical upward movement of said member to one operative position and upon return movement of said member to another operative position, a plate disposed horizontally above said member, said plate being dished downward at the edges, a diaphragm of flexible material at its edge hermetically secured to the downwardly dished portions of the plate to thus form a compression chamber, a connection between the member and the central portion of the diaphragm, whereby vertically upward movement of the member, and thus the diaphragm, compresses the fluid in the compression chamber, said plate being provided with a central opening and at least one other opening in close proximity to the central opening, a plug having a polygonal head fitting in a matching recess in the bottom surface of the plate, a threaded cylindrical portion, and a tapered upper end, disposed in said central opening so as to project the tapered end away from the compression chamber, a valve seat in the shape of a closed ridge encircling the central opening and the said other opening, an annular valve of relatively thin rubber-like material disposed loosely over the cylindrical portion of the plug, said valve having a diameter of sufficient magnitude that the valve edge extends beyond the valve seat, a sleeve nut threaded onto the threaded cylindrical portion to firmly hold the plug in position and to grip the inner edge of the valve between the plate and the sleeve nut to provide a hermetic seal at the central opening, said plug being provided with an axial opening, said sleeve nut being provided with a flange having a downwardly directed shoulder in spaced relation to the valve, said sleeve nut being provided with a transverse channel below the shoulder and in such position that the channel falls above the threaded cylindrical portion of the plug, a concentrically corrugated washer disposed on top of the valve, a spring disposed between the shoulder on the sleeve nut and the washer to provide a bias for the valve against the valve seat, said washer being so positioned that a downwardly directed concave surface is in registry with the valve seat, said plate being provided with upwardly directed sidewalls to provide a cup-shaped structure above the plate, a screen, to prevent dust from getting into the valve region, disposed to fit at its inner region on the top of said flange and at its periphery being secured to the upper edge of said side walls, a spider construction disposed to engage the top of the flange on the sleeve nut and the side walls to prevent rotation of said sleeve nut and to provide a support for the screen, a stem threaded into the sleeve nut, said stem having a recess matching the tapered end of the plug, whereby rotation of the stem will cause the stem to move to selected positions with respect to the tapered end of the plug to thus restrict the flow of fluid into the compression chamber, and means for indicating the position of adjustment of said stem.

6. An electric contactor including in combination, a vertically reciprocable member, electromagnetic means for actuating said member against its gravity bias, vertically upward, switching means actuated upon vertical upward movement of said member to one operative position and upon return movement of said member to another operative position, a plate disposed horizontally above said member, said plate being dished downwardly at the edges, a diaphragm of flexible material at its edge hermetically secured to the downwardly dished portions of the plate to thus form a compression chamber, a connection between the member and the central portion of the diaphragm, whereby vertically upward movement of the member, and thus the diaphragm, compresses the fluid in the compression chamber, said plate being provided with a central opening and at least one other opening in close proximity to the central opening, a plug having a polygonal head fitting in a matching recess in the bottom surface of the plate, a threaded cylindrical portion, and a tapered upper end, disposed in said central opening so as to project the tapered end away from the compression chamber, a valve seat in the shape of a closed ridge encircling the central opening and the said other opening, an annular valve of relatively thin rubber-like material disposed loosely over the cylindrical portion of the plug, said valve having a diameter of sufficient magnitude that the valve edge extends beyond the valve seat, a sleeve nut threaded onto the threaded cylindrical portion to firmly hold the plug in position and to grip the inner edge of the valve between the plate and the sleeve nut to provide a hermetic seal at the central opening, said plug being provided with an axial opening, said sleeve nut being provided with a flange having a downwardly directed shoulder in spaced relation to the valve, said sleeve nut being provided with a transverse channel below the shoulder and in such position that the channel falls above the threaded cylindrical portion of the plug, a concentrically corrugated washer disposed on top of the valve, a spring disposed between the shoulder on the sleeve nut and the washer to provide a bias for the valve against the valve seat, said washer being so positioned that a downwardly directed concave surface is in registry with the valve seat, said plate being pro-

vided with upwardly directed sidewalls to provide a cup-shaped structure above the plate, a screen, to prevent dust from getting into the valve region, disposed to fit at its inner region on the top of said flange and at its periphery being secured to the upper edge of said side walls, a stem threaded into the sleeve nut, said stem in its bottom end having a recess matching the tapered end of the plug, whereby rotation of the stem will cause the stem to be adjusted to any selected position with respect to the tapered end of the plug to thus restrict the flow of fluid into the compression chamber, a cap, in the shape of an inverted saucer and having a relatively small central opening, disposed on the side walls to firmly engage the outer periphery of the screen, an index on the cap, said stem being provided with a downwardly directed shoulder near the upper end which projects through the central opening in the cap, and a disc having a downwardly directed skirt, secured to the upper end of the stem, said skirt being provided with graduations for indicating, in coaction with the index on said cap, the angular position of said stem in terms of units of time required for the reciprocable member to return to its unactuated position after deenergization of said electromagnetic means.

7. An electric contactor including in combination, a vertically reciprocable member, electromagnetic means for actuating said member against its gravity bias, vertically upward, switching means actuated upon vertical upward movement of said member to one operative position and upon return movement of said member to another operative position, a plate disposed horizontally above said member, said plate being dished downwardly at the edges, a diaphragm of flexible material at its edge hermetically secured to the downwardly dished portions of the plate to thus form a compression chamber, a connection between the member and the central portion of the diaphragm, whereby vertically upward movement of the member, and thus the diaphragm, compresses the fluid in the compression chamber, said plate being provided with a central opening and at least one other opening in close proximity to the central opening, a plug having a polygonal head fitting in a matching recess in the bottom surface of the plate, a threaded cylindrical portion, and a tapered upper end, disposed in said central opening so as to project the tapered end away from the compression chamber, a valve seat in the shape of a closed ridge encircling the central opening and the said other opening, an annular valve of relatively thin rubber-like material disposed loosely over the cylindrical portion of the plug, said valve having a diameter of sufficient magnitude that the valve edge extends beyond the valve seat, a sleeve nut threaded onto the threaded cylindrical portion to firmly hold the plug in position and to grip the inner edge of the valve between the plate and the sleeve unit to provide a hermetic seal at the central opening, said plug being provided with an axial opening, said sleeve nut being provided with a flange having a downwardly directed shoulder in spaced relation to the valve, said sleeve nut being provided with a transverse channel below the shoulder and in such position that the channel falls above the threaded cylindrical portion of the plug, a concentrically corrugated washer disposed on top of the valve, a spring disposed between the shoulder on the sleeve nut and the washer to provide a bias for the valve against the valve seat, said washer being so positioned that a downwardly directed concave surface is in registry with the valve seat, said plate being provided with upwardly directed side walls to provide a cup-shaped structure above the plate, a screen to prevent dust from getting into the valve region, disposed to fit at its inner region on the top of said flange and at its periphery being secured to the upper edge of said side walls, a spider construction disposed to engage the top of the flange on the sleeve nut and the side walls to prevent rotation of said sleeve nut and to provide a support for the screen, a stem threaded into the sleeve nut, said stem in its bottom end having a recess matching the tapered end of the plug, whereby rotation of the stem will cause the stem to be adjusted to any selected position with respect to the tapered end of the plug to thus restrict the flow of fluid into the compression chamber, a cap, in the shape of an inverted saucer and having a relatively small central opening, disposed on the side walls to firmly engage the outer periphery of the screen, an index on the cap, said stem being provided with a downwardly directed shoulder near the upper end which projects through the central opening in the cap, and a disc, having a downwardly directed skirt, secured to the upper end of the stem, said skirt being provided with graduations for indicating, in coaction with the index on said cap, the angular position of said stem in terms of units of time required for the reciprocable member to return to its unactuated position after deenergization of said electromagnetic means.

8. In a time limit device for electric apparatus, in combination, a dished partition, a flexible diaphragm disposed over the dished partition to form a closed chamber said diaphragm being of fluid-tight material and engaging the partition to form a fluid-tight joint, a sleeve element having an outer conical portion and an axial opening being threaded into the partition, a valve of relatively thin rubber-like material disposed over the outer end of the sleeve against the outer surface of the partition, a valve seat on the partition surrounding the outer end of the sleeve element, said partition being provided with an opening inside of the valve seat, a sleeve nut threaded over the outer end of the sleeve element to firmly engage the valve to form a fluid-tight joint, said sleeve nut being provided with a shoulder in spaced relation to the valve, spring means disposed between said shoulder and valve to bias said valve against the seat, a stem disposed for axial adjustment within said sleeve nut by threaded engagement with said sleeve nut, said stem being provided with a conical well to fit over the conical portion of the sleeve element, whereby axial movement of the stem varies the space between the inner surface of the conical well and the outer surface of the conical portion of the sleeve element, said sleeve nut being provided with a radial opening between the shoulder and the end threaded on the sleeve element to form a fluid passage from the outside through the region about the conical outer portion of the sleeve element and inner surface of the well and the opening axial of the sleeve element to the closed chamber, and means for indicating the axial portion of said stem with reference to the sleeve element.

9. In a time limit device, in combination, a base provided with a depression, a flexible diaphragm secured to the base and disposed over the depression to form a compression chamber, said base being provided with a pair of spaced open-

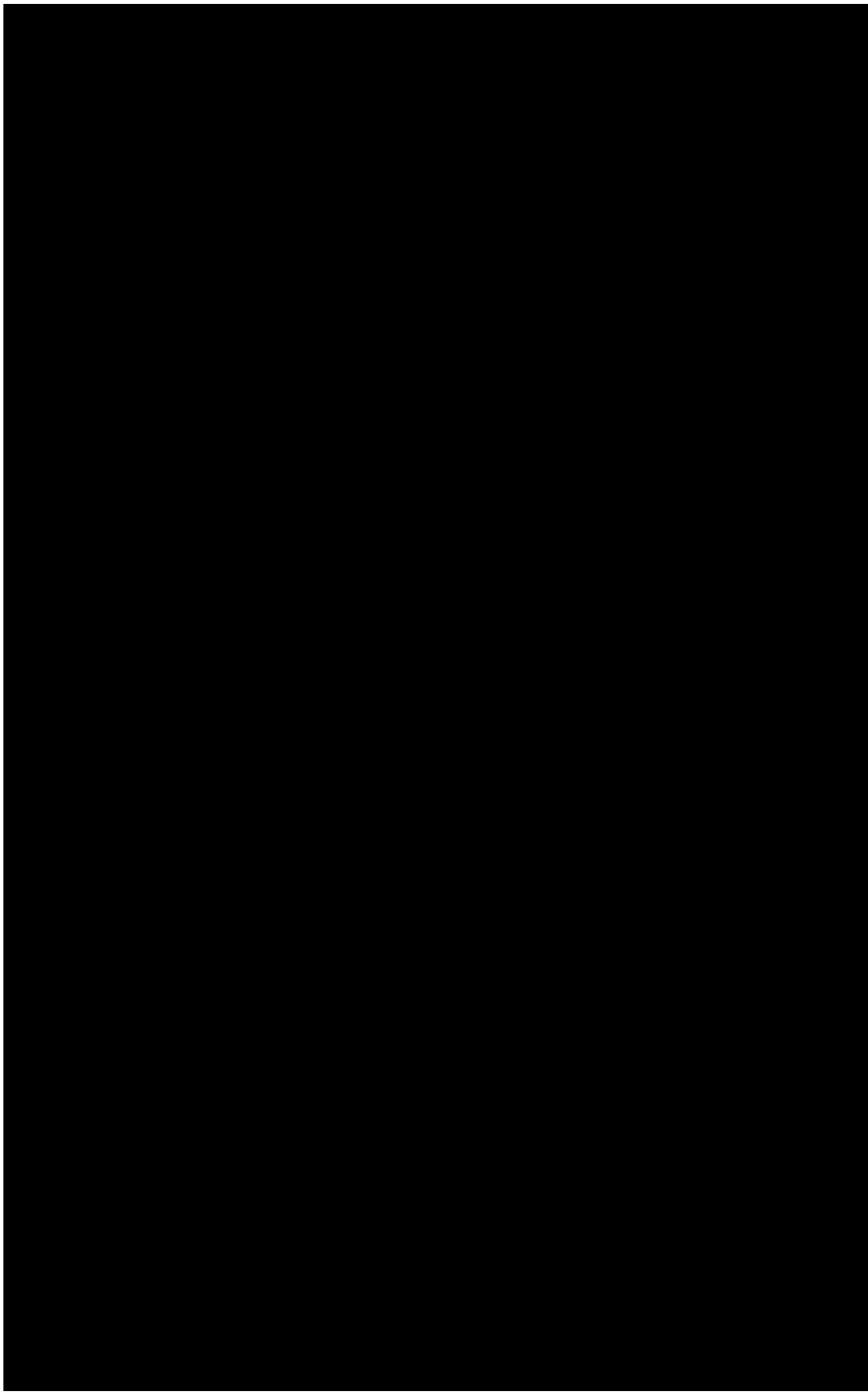

beyond the valve seat, a sleeve nut threaded onto the threaded cylindrical portion to firmly hold the plug in position and to grip the inner edge of the valve between the plate and the sleeve nut to provide a hermetic seal at the central opening, said plug being provided with an axial opening, said sleeve nut being provided with a flange having a downwardly directed shoulder in spaced relation to the valve, said sleeve nut being provided with a transverse channel below the shoulder and in such position that the channel falls above the threaded cylindrical portion of the plug, a concentrically corrugated washer disposed on top of the valve, a spring disposed between the shoulder on the sleeve nut and the washer to provide a bias for the valve against the valve seat, said washer being so positioned that a downwardly directed concave surface is in registry with the valve seat, said plate being provided with upwardly directed side walls to provide a cup-shaped structure above the plate, a screen, to prevent dust from getting into the valve region, disposed to fit at its inner region on the top of said flange and at its periphery being secured to the upper edge of said side walls, a spider construction disposed to engage the top of the flange on the sleeve nut and the side walls to prevent rotation of said sleeve nut and to provide a support for the screen, a stem threaded into the sleeve nut, said stem having a recess in its bottom end matching the tapered end of the plug, whereby rotation of the stem will cause the stem to be adjusted to any selected position with respect to the tapered end of the plug to thus restrict the flow of fluid into the compression chamber, a cap, in the shape of an inverted saucer and having a relatively small central opening, disposed on the side walls to firmly hold the outer periphery of the screen, an index on the cap, and means secured to the end of the stem projecting above the central opening in said cap and coacting with the index on the cap for indicating the angular adjustment of the stem.

12. An electric contactor including in combination, a vertically reciprocable member, electromagnetic means for actuating said member against its gravity bias, vertically upward, switching means actuated upon vertical upward movement of said member to one operative position and upon return movement of said member to another operative position, a plate disposed horizontally above said member, said plate being dished downwardly at the edges, a diaphragm of flexible material at its edge hermetically secured to the downwardly dished portions of the plate to thus form a compression chamber, a connection between the member and the central portion of the diaphragm, whereby vertically upward movement of the member, and thus the diaphragm, compresses the fluid in the compression chamber, said plate being provided with a central opening and at least one other opening in close proximity to the central opening, a plug having a polygonal head fitting in a matching recess in the bottom surface of the plate, a threaded cylindrical portion, and a tapered upper end, disposed in said central opening so as to project the tapered end

away from the compression chamber, a valve seat in the shape of a closed ridge encircling the central opening and the said other opening, an annular valve of relatively thin rubber-like material disposed loosely over the cylindrical portion of the plug, said valve having a diameter of sufficient magnitude that the valve edge extends beyond the valve seat, a sleeve nut threaded onto the threaded cylindrical portion to firmly hold the plug in position and to grip the inner edge of the valve between the plate and the sleeve nut to provide a hermetic seal at the central opening, said plug being provided with an axial opening, said sleeve nut being provided with a flange having a downwardly directed shoulder in spaced relation to the valve, said sleeve nut being provided with a transverse channel below the shoulder and in such position that the channel falls above the threaded cylindrical portion of the plug, a concentrically corrugated washer disposed on top of the valve, a spring disposed between the shoulder on the sleeve nut and the washer to provide a bias for the valve against the valve seat, said washer being so positioned that a downwardly directed concave surface is in registry with the valve seat, said plate being provided with upwardly directed side walls to provide a cup-shaped structure above the plate, a screen, to prevent dust from getting into the valve region, disposed to fit at its inner region on the top of said flange and at its periphery being secured to the upper edge of said side walls, a spider construction disposed to engage the top of the flange on the sleeve nut and the side walls to prevent rotation of said sleeve nut and to provide a support for the screen, a stem threaded into the sleeve nut, said stem in its bottom end having a recess matching the tapered end of the plug, whereby rotation of the stem will cause the stem to be adjusted to any selected position with respect to the tapered end of the plug to thus restrict the flow of fluid into the compression chamber, a cap, in the shape of an inverted saucer and having a relatively small central opening, disposed on the side walls to firmly engage the outer periphery of the screen, an index on the cap, said stem being provided with a downwardly directed shoulder near the upper end which projects through the central opening in the cap, and a disc, having a downwardly directed skirt, secured to the upper end of the stem, said skirt being provided with graduations for indicating, in coaction with the index on said cap, the angular position of said stem in terms of units of time required for the reciprocable member to return to its unactuated position after de-energization of said electromagnetic means, a screen holding washer disposed over the screen adjacent the upper end of the sleeve nut, and a friction spring disposed between the shoulder on the stem and the screen holding washer to frictionally hold the stem in any position of adjustment.

JOHN C. PONSTINGL.
RALPH B. IMMEL.

No references cited.