July 31, 1956 W. C. SPEED ET AL 2,757,099

PRODUCTION OF MAGNETIC SOUND TAPE

Filed Dec. 21, 1950

Fig. 1.

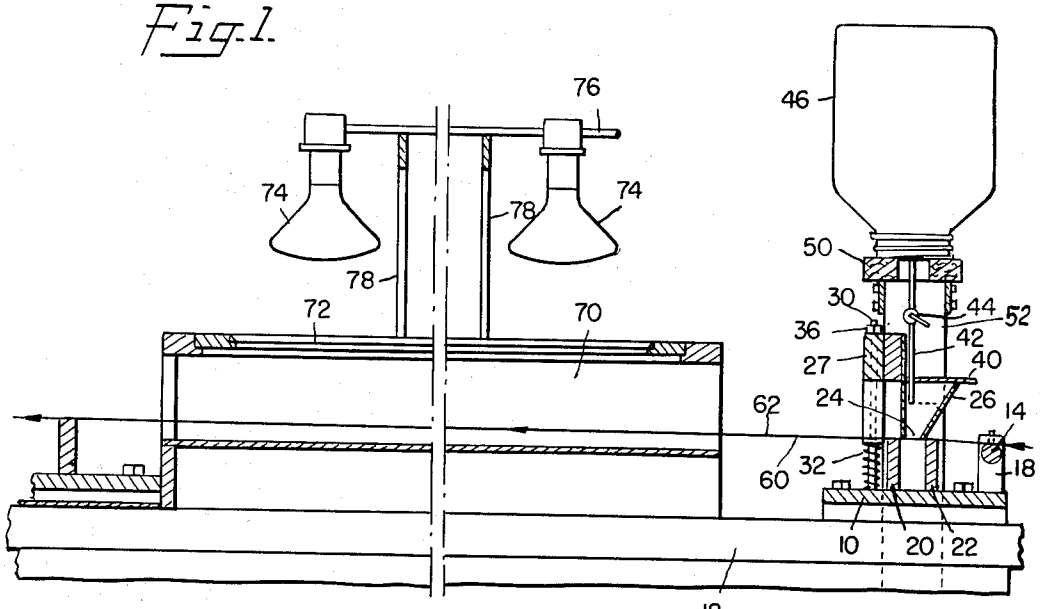

Fig. 2.

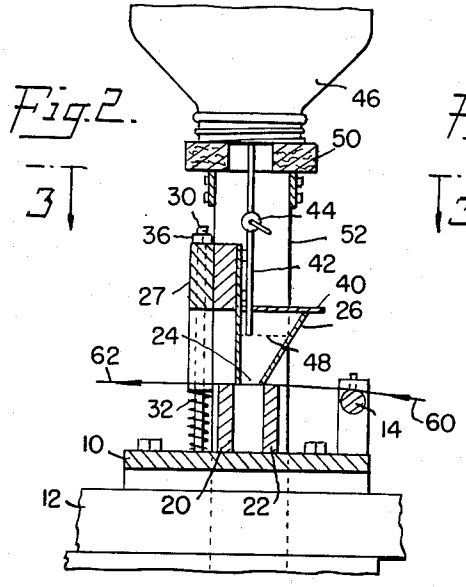

Fig. 3.

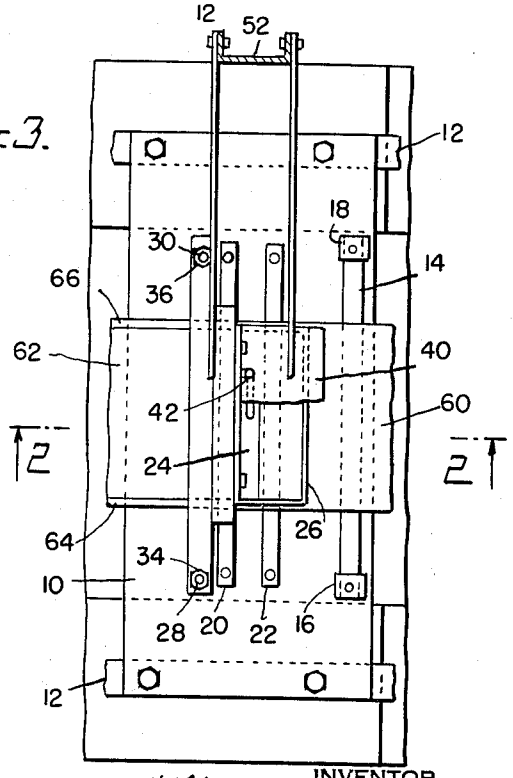

Fig. 4.

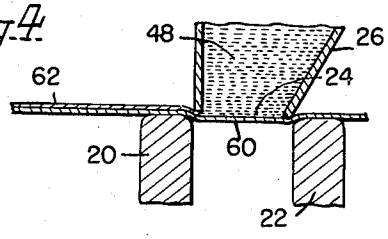

INVENTOR
William C. Speed
Harold J. Southcomb
BY
Pennie, Edmonds, Morton & Barrows
ATTORNEYS

United States Patent Office 2,757,099 Patented July 31, 1956

2,757,099

PRODUCTION OF MAGNETIC SOUND TAPE

William C. Speed, Riverside, and Harold J. Southcomb, Stamford, Conn., assignors to Audio Devices, Inc., New York, N. Y., a corporation of New York

Application December 21, 1950, Serial No. 201,977

1 Claim. (Cl. 117—7)

This invention relates to the production of magnetic recording tape and has for its object certain improvements in the method of and apparatus for precoating tape base with an adhesive material so that it will more readily receive and hold a coating of magnetic material.

This application is a division of copending applications, Serial Nos. 201,974 and 201,975 which is now Patent No. 2,700,367, issued January 25, 1955, both having been filed December 21, 1950, simultaneously herewith. In accordance with the disclosures therein contained, tape base is passed while under tension successively through a series of zones to obtain the magnetic recording tape. Thus, the tape base is moved from a charging zone to an adhesive precoating zone, through a precoat drying zone, a magnetic coating zone and one or more drying zones, etc. The subject matter of the present application is confined to the improvements relating to the adhesive precoating and precoat drying operations.

It has heretofore been difficult satisfactorily to apply conventional coatings of magnetic material, such as magnetic oxide of iron, on conventional tape base, such as paper, cellulose acetate. When, therefore, the magnetic coating material cannot be readily applied and does not properly adhere to the tape base it is advisable to apply a light coating or dressing of suitable adhesive material such as a copolymer of polybutadiene with acrylonitrile, the methyl esters of acrylic acid, etc., to the tape base in advance of the magnetic coating step. The adhesive coating, moreover, is partially dried advantageously to remove some of its solvent before the magnetic coating is applied.

These and other features of the invention will be better understood by referring to the accompanying drawing, taken in conjunction with the following description, in which:

Fig. 1 is a side elevation of a form of apparatus diagrammatically illustrating a practice of the invention; and

Figs. 2, 3 and 4 are enlarged views of the tape base precoating portion of the apparatus, Fig. 2 being a sectional view on the line 2—2 of Fig. 3, Fig. 3 a sectional plan of the line 3—3 and Fig. 2 and Fig. 4 a fragmentary sectional elevation showing the adhesive feed hopper, tape base and its guide supports.

A platform **10** extends across and is secured to a frame **12**. A laterally disposed guide rod **14** extends across the near end of the platform, being secured at its ends to vertical supports **16** and **18** in turn secured to the platform. As more clearly shown in Fig. 2, a pair of parallel supports **20** and **22** are secured to the platform. The supports are positioned respectively adjacent the opposite sides of the horizontally disposed discharge opening **24** of a feed hopper **26** secured at its rear upper portion to a vertically adjustable bracket **27**. The ends of the bracket are provided with vertical passageways fitted with a pair of vertically disposed rods **28** and **30** integrally secured at their lower ends to the platform. The lower unthreaded ends of the rods are fitted with a coiled spring **32** and

the upper threaded ends are fitted with nuts **34** and **36**. This construction permits vertical adjustment of the feed hopper. The nuts may be suitably turned separately to elevate or lower each end of the hopper and hence to adjust its position with respect to the tops of parallel guide supports **20** and **22** and the top of the tape base.

The top of the hopper is provided with a removable cover **40**, through which extends a conduit **42**, with a regulating valve **44**, depending from a container **46** of suitable free-flowing liquid adhesive material **48**. The container rests on an annular cushion **50** carried by a support **52** attached to the frame.

As more clearly shown in Fig. 4, discharge opening **24** of the hopper is positioned slightly below the top level of parallel guide supports **20** and **22**. This depresses moving tape base **60** slightly into the space between the supports, thus causing it to wipe against the bottom of the hopper. Since only a very thin coat **62** of adhesive material is desired, this wiping action is sufficient to provide it. As shown in Fig. 3 narrow side portions **64** and **66** of the tape base extend slightly beyond the ends of the discharge opening of feed hopper **26** and hence do not receive the adhesive material.

The precoat drying device is in the form of an elongated tunnel **70** enclosed by a bottom, side walls and a glass covered top **72**; the ends of the tunnel being open so that the tape base may pass therethrough while suspended and out of contact with the walls. A plurality of heating devices **74**, such as infrared lamps, are mounted directly above the glass covered top; the lamps being suspended from an electric conduit **76** in turn supported by vertical posts **78** attached to the frame.

Radiant heat is passed through the glass covered top onto the coated top of the tape base passing through the tunnel. As the adhesive precoat comes from the precoating machine, it is generally more liquid or less viscous than is desired for the subsequent coating operation with magnetic material. Some of the solvent, therefore, is advantageously volatilized from the adhesive precoat in the precoat drying zone while the tape base moves in its path of travel over guide support **80** to the magnetic coating zone.

It will be clear to those skilled in this art that the above is only by way of example, and that the practice of the invention readily lends itself to a number of useful modifications.

We claim:

In the method of producing magnetic sound-recording and sound-reproducing tape by passing a relatively long and narrow non-magnetic tape base while under tension to and through a magnetic coating zone to receive a liquid dispersion of free-flowing finely-divided magnetic material, which comprises moving the tape base while under tension in a predetermined path of travel to and through an adhesive precoating zone in advance of the magnetic coating zone, bringing the intermediate transverse portion only of one side of the tape base in wiping engagement with a transverse source of free-flowing adhesive liquid from the class consisting of a copolymer of polybutadiene with acrylonitrile and a methyl ester of acrylic acid to provide a very thin even layer thereof on the surface of the intermediate transverse portion, partially drying the resulting adhesive coating by volatilizing solvent therefrom while the tape base advances from the adhesive precoating zone to the magnetic coating zone, passing the partially dried tape base through the magnetic coating zone, and applying a layer of the liquid dispersion of finely-divided magnetic material on the partially dried adhesive coating to bind the magnetic coating more firmly thereon, the adhesive coating liquid being compatible with the non-magnetic tape base and the magnetic coating material so that the

sound-recording and sound-reproducing characteristics of the tape are not impaired thereby.

References Cited in the file of this patent

UNITED STATES PATENTS

1,494,315	Ostenberg	May 13, 1924
1,871,790	Hansen	Aug. 16, 1932
1,922,020	Van Voorhis	Aug. 8, 1933
1,935,060	Perkins	Nov. 14, 1933
1,947,791	Moyer	Feb. 20, 1934
2,014,068	Hutchman	Sept. 10, 1935
2,149,307	Nash	Mar. 7, 1939
2,321,939	Quinn	June 15, 1943
2,514,187	Bosomworth	July 4, 1950
2,607,710	Schmelzle	Aug. 19, 1952