June 6, 1950 C. O. WOOD 2,510,163

ELECTRICAL CONTROL SYSTEM FOR PLURAL CONVEYER ORGANIZATION

Filed Dec. 17, 1945 2 Sheets-Sheet 1

Fig. 1

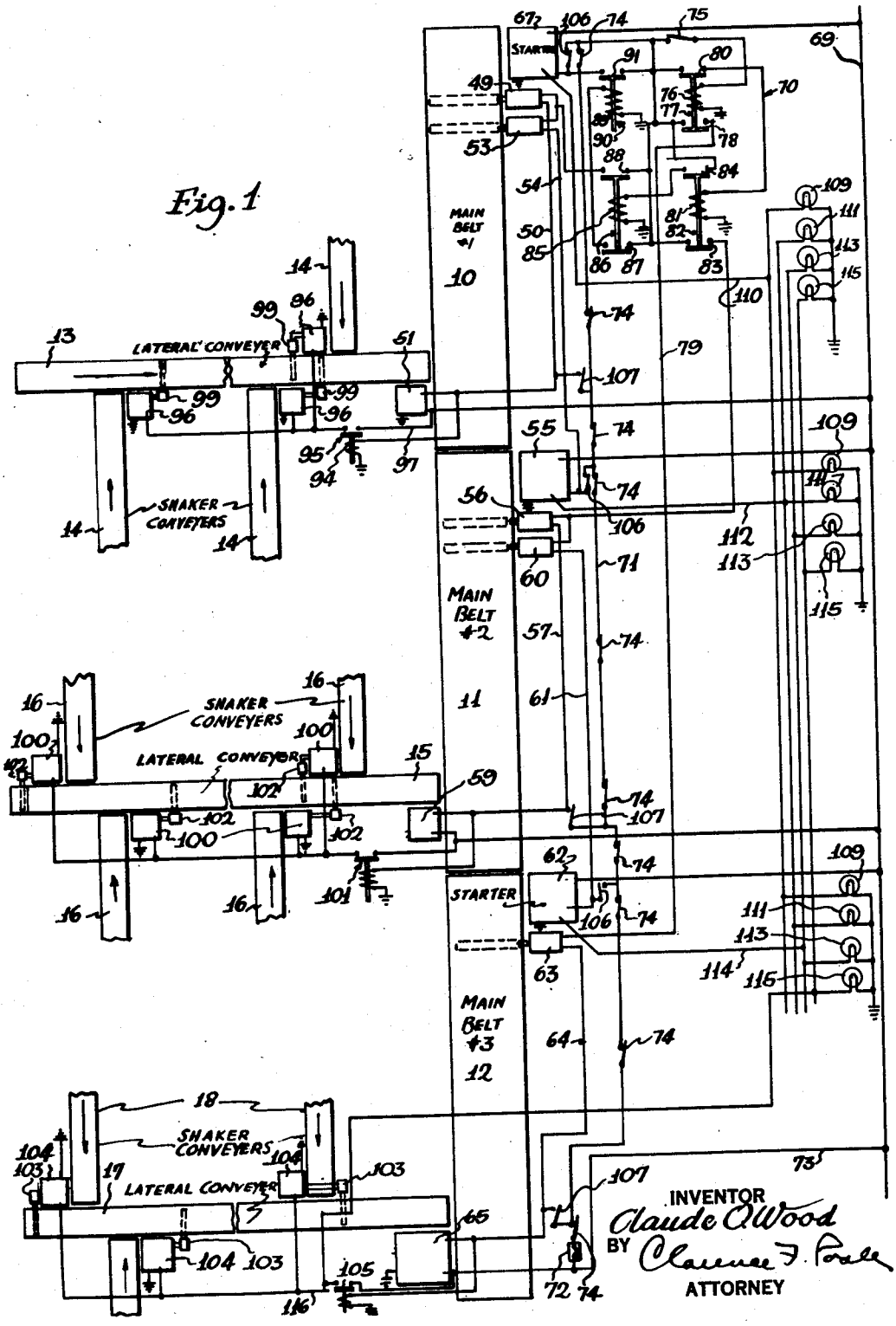

June 6, 1950 C. O. WOOD 2,510,163

ELECTRICAL CONTROL SYSTEM FOR PLURAL CONVEYER ORGANIZATION

Filed Dec. 17, 1945 2 Sheets-Sheet 2

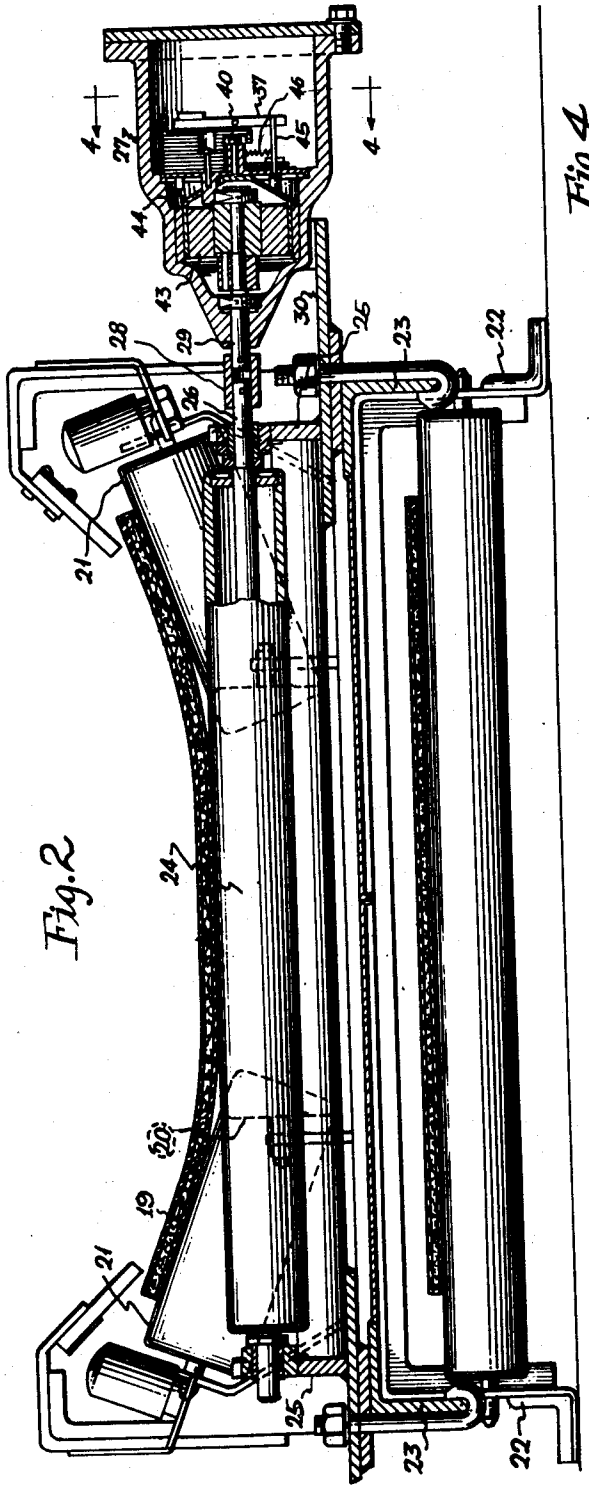

Fig. 2

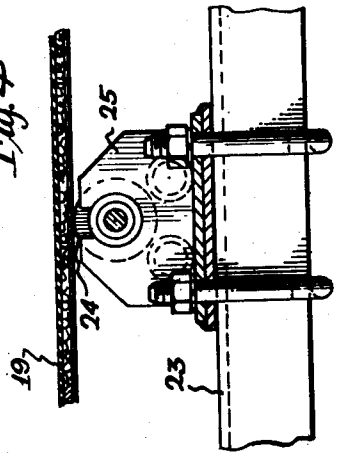

Fig. 4

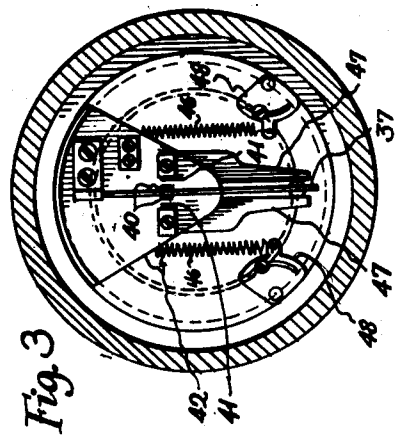

Fig. 3

INVENTOR
Claude O. Wood
BY Clarence A. Poole
ATTORNEY

Patented June 6, 1950 2,510,163

UNITED STATES PATENT OFFICE

2,510,163

ELECTRICAL CONTROL SYSTEM FOR PLURAL CONVEYER ORGANIZATION

Claude O. Wood, Chicago, Ill., assignor to Goodman Manufacturing Company, Chicago, Ill., a corporation of Illinois

Application December 17, 1945, Serial No. 635,562

4 Claims. (Cl. 198—79)

1

This invention relates to improvements in electrical control systems for starting and stopping a plurality of conveyors, one of which discharges into the other, in a predetermined sequence.

Conveyer systems used in mines underground have heretofore utilized a plurality of main belt conveyers extending along a main entry of the mine and arranged in cascade relation with respect to each other so one will discharge into the other, with lateral belt conveyers extending along the cross entries of the mine for feeding the main line conveyers. These lateral belt conveyers in turn may be fed by room conveyers bringing the coal from the various rooms of the mine.

Various control systems have heretofore been provided for starting and stopping a series of conveyers in mines in a predetermined sequence, so a conveyer will not discharge onto another conveyer which is not in operation and cause overload of the conveyer which is stopped, and spillage of the coal, but such systems have been dependent upon contactor controls utilizing time delay relays to delay the time interval that the next succeeding conveyer starts. Such systems require a number of control wires which must be brought up to the cross entries to the starters for the room conveyers, for starting said conveyers, which wires are live except when the entire conveyer system is out of operation.

Such systems, in order to operate properly, also require that the controls for one conveyer be connected with the controls for the other conveyer. The running of a number of control and main power lines to the cross entries and the connecting of the controls for the various conveyers together is not permitted by the Bureau of Mines, due to the fact that a dangerous condition might be created, which would be apt to cause an explosion.

The principal objects of my invention are to provide a new and improved form of control system for starting and stopping a plurality of conveyers in a predetermined sequence, which is safe for operation in gaseous mines and minimizes the number of wires coming into the cross entries and assures that these wires will be dead except when the main conveyers of the conveyer system are in operation.

Another object of my invention is to provide a new and improved form of control system for a plurality of conveyers in mines, assuring that the conveyers nearest the discharge point start first and stop last, and which system is controlled by the speed of travel of the next preceding conveyer so that no lateral or branch conveyer can start until the main line conveyer into which it discharges is up to speed.

2

These and other objects of my invention will appear from time to time as the following specification proceeds and with reference to the accompanying drawings wherein:

Figure 1 is a wiring diagram illustrating one form in which my invention may be embodied;

Figure 2 is a transverse sectional view taken through a main line belt conveyer and showing a switch operated by the main line conveyer for controlling operation of a lateral conveyer;

Figure 3 is a fragmentary sectional view taken substantially along line 3—3 of Figure 2; and

Figure 4 is an end view with parts shown in longitudinal section in order to show the drive from the conveyer belt to the roller for driving the switch for controlling operation of the lateral conveyer.

In Figure 1 of the drawings three main belt conveyers 10, 11 and 12 are shown. Said conveyers are arranged in cascade relation with respect to each other so that the belt 12 will discharge into the belt 11, and the belt 11 will discharge into the belt 10, and the belt 10 may discharge into mine cars, a loading station for loading the coal onto the mine cars, or the tipple outside of the mine. A lateral conveyer 13 is shown as discharging into the main belt conveyer 10 while a plurality of room conveyers 14, 14 are shown as being arranged to discharge into said lateral conveyer. Said room conveyers as herein shown as being shaker conveyers, but may be any other known form of conveyer for conveying coal from the working face of the mine to a cross entry. Also, more than one lateral conveyer may be provided to discharge onto the main belt conveyer, if desired.

In a like manner, a lateral conveyer 15 is arranged to discharge onto the main belt conveyer 11, and a plurality of branch or room conveyers 16, 16 are arranged to discharge onto said lateral conveyer. Similarly a lateral conveyer 17 is arranged to discharge onto the main belt conveyer 12 while a plurality of branch or room conveyers 18, 18 are arranged to discharge onto said lateral conveyer.

The main belt conveyers 10, 11 and 12 may be of any well known form but are shown in Figure 2 as being troughed belt conveyers wherein a belt 19 travels over spaced horizontal idlers 20, 20 and is troughed by inclined idlers 21, 21 supporting its opposite edges. Said idlers are mounted on spaced apart supporting standards indicated generally by reference character 22 and are held in spaced apart relation with respect to each other by means of spacing members 23, 23, in a manner well known to those skilled in the art. In Figure 2 of the drawings a horizontal roller 24 is shown

as being mounted on opposite spacing members 23, 23 between the standards 22, 22 on bearing support members 25, 25, for supporting an intermediate portion of the belt between said inclined idler rollers. Said horizontal roller is rotatably driven by the belt 19 and is mounted on and drives a transverse shaft 26 connected with a roller switch 27. A coupling 28 connects said shaft 26 with a shaft 29 of said roller switch, for driving said switch.

The roller switch 27 is mounted on a plate 30 extending laterally from an intermediate spacing member 23. Said roller switch is herein shown as being a well known form of magnetically operated switch and is no part of my invention so need only be shown and described as to its main operating parts.

As herein shown, contacts 40, 40 intermediate the ends of a spring contact strip 37 are engaged with one or the other of spaced contacts 41, 41 mounted on an insulated support 42, to complete a circuit when said switch is rotating in one direction or another. The contact strip 37 is flexed to engage a contact 40 with a contact 41 by means of a magnetized rotor 43 which rotates an aluminum cup 44, on much the same principles as operate the needle of an automoble speedometer. Said cup is connected with the lower end of said spring contact strip by means of a rod 45. Springs 46, 46 connected with centering arms 47, 47 are provided to hold the contacts 40, 40 in a neutral position out of engagement with the contacts 41, 41 when the conveyer is not in operation.

Since the magnetic operating force of the aluminum cup is dependent upon speed, a contact 40 is engaged with a contact 41 at and above a predetermined speed of rotation of the rotor 43. As the speed of said rotor decreases, a definite point will be reached where the spring force will overcome the magnetic force and disengage a contact 40 from a contact 41. The tension of said springs and the point at which a contact 40 will be moved to engage a contact 41 may be adjusted by changing the position of connecting members 48, 48, connected to the free ends of said springs.

In the form of my invention shown in Figure 1 of the drawings, a roller switch 49 is driven from the main belt conveyer 10 and completes a circuit to a control line 50, connected with a starter 51 for the lateral belt conveyer 13, for starting said lateral belt conveyer, when said main belt conveyer gets up to speed. Another roller switch 53 is driven from said main belt conveyer 10 and completes a circuit to a control line 54, connected with a starter 55 for the main belt conveyer 11, when the belt conveyer 10 gets up to speed, for starting said main belt conveyer. A roller switch 56 is driven from the main belt 11 and completes a circuit to a control line 57, connected with a starter 59 for the lateral belt conveyer 15, when the main belt conveyer 11 gets up to speed, for starting said lateral belt conveyer. In a like manner, a roller switch 60 connects a control line 61 with a starter 62 for the main belt 12, for starting said main belt when the belt conveyer 11 reaches a predetermined speed.

A roller switch 63 is also provided to complete a circuit to a control line 64 connected with a starter 65 for the lateral belt conveyer 17 when the main belt conveyer 12 reaches a predetermined speed, for starting said lateral belt conveyer. Where another main belt conveyer is provided to discharge into the belt conveyer 12, another roller switch may be provided to start said main belt conveyer when said belt conveyer 12 gets up to speed.

It should here be understood that the main belt conveyers, the lateral conveyers, and the shaker conveyers are driven by individual motors through speed reducers in a well known manner, and that the starters for each conveyer may be of any form well known to those skilled in the art, which will automatically connect the associated motor to a main power line and cut out a resistance from said motor to start said motor. Said starters and their connections to the conveyer drive motors are no part of my present invention, so will not herein be shown or described in detail.

A starter 67 is provided to start the main belt conveyer 10. Said starter is connected to the positive conductor 69 of a main power line. A control panel indicated generally by reference character 70 is provided to connect a control line 71 to the roller switches 49, 53, 56, 60 and 63, and to connect said control line 71 to said starter 67, to start the motor for the main belt conveyer 10 after said roller switches have been connected in the control line circuit. Said control line 71 connects said panel to the positive conductor 69 of the main power line through a fuse 72 and control line conductor 73. Said control line 71 has a plurality of emergency switches 74, 74 at various points along its length, for breaking the circuit to said control line and stopping the entire conveyer system in cases of emergency.

The control panel 70 may be located in the main entry of a mine where the mine is provided with good air and may be totally enclosed in a flame-proof casing. Said control panel, as herein shown, includes a manually operated switch 75, which when closed, closes a circuit from the control line 71 to an operating coil 76 of a relay 77. This will energize said coil to close contacts 78 of said relay and close a circuit from the control line 71 to a control line 79, leading to the roller switch 63, to connect said roller switch in the control line circuit. Closing of said relay will also close contacts 80 thereof, to close a circuit to a coil 81 of a time delay relay 82. This will energize said coil, to close contacts 83 and 84 of said time delay relay and connect the roller switch 56 with the control line 71 and connect a coil 85 of a time delay relay 86 with the control line 71, to energize said coil and close contacts 87 and 88 of said relay. This will connect the roller switches 49 and 53 with the control line 71 and will connect a coil 89 of a time delay relay 90 with said control line, to energize said coil and close contacts 91 of said relay. When the relay 90 closes, a circuit will be completed to a control line 92 leading into said starter. Completion of said circuit will energize the coils of the relays (not shown) of said starter to close said relays and start the motor which drives the main belt conveyer through a resistance (not shown) and cut said resistance out of the circuit to said motor as said motor is started. This will connect the starter 67 with the control line 71 to energize said starter and start the motor for driving the main belt conveyer 10.

The time delay relays 82, 86 and 90 are set to open at predetermined time intervals after opening of the switch 75, so the shaker conveyers 18 and the lateral and main line conveyers 17 and

12 will be the first conveyers to stop and the preceding conveyers will stop in a reverse order to which they started, so a moving conveyer will never discharge into a stationary conveyer.

When the main belt conveyer 10 is started in the hereinbefore described manner and said belt conveyer gets up to a predetermined speed, the contacts of the roller switch 53 will close to energize the control line 54 and the starter 55 of the main belt conveyer 11, to start said belt conveyer. The contacts of the roller switch 49 will then close. The starter 55 operates in the same manner as the starter 67. The circuit to the control line 54 leading to said starter to energize the coils of the relays thereof is, however, closed upon engagement of the contacts of the roller switch 53, which is connected in the control line 74 through the relay 85. Said roller switch is set so that its contacts will close shortly after the contacts of the roller switch 53 close, so the main belt conveyer 11 will start before the lateral conveyer 13. When the contacts of the roller switch 49 are closed, the control line 50 will be energized to energize the starter 51 and start the lateral belt conveyer 13.

When the main belt conveyer 11 gets to a predetermined speed, the contacts of the roller switch 60 will close, to close a circuit to the control line 61 and energize the starter 62, to start the main belt conveyer 12. The starter 62 is likewise similar to the starters 55 and 67 and the coils of its relays are energized by closing of the roller switch 60 which is connected in the control line through the relay 82. The roller switch 56 is set so that its contacts will close shortly after the contacts of the roller switch 60 close, to connect the conductor 57 in the control line and energize the starter 59 and start the lateral conveyer 15.

In a similar manner the roller switch 63 will complete a circuit to the control line 64 when the main belt conveyer 12 gets up to a predetermined speed, to energize the starter 65 and start the lateral conveyer 17.

When the circuit to the control line 50 is completed by the roller switch 49, a coil 94 of a contactor 95 will be energized, to close said contactor and connect starters 96, 96 for the shaker conveyers 14, 14 to the main power line 69 through a conductor 97. A separate roller switch 99 is provided for each starter 96. Said starters 96, 96 are similar to the starters 67 and 51 with the exception that they are connected directly to the main power line rather than to a control line as are said starters 67 and 51. The coils of the relays of said starters 96, 96 are energized to complete a control circuit within said starter and complete a circuit to the motors for driving the room conveyers and cut out a resistance therefrom as said motors are started, as said roller switches 99, 99 rotate at a predetermined speed and close their contacts. Said roller switches are driven by the belt of the lateral conveyer 13 and are arranged to complete a control circuit to their associated starter 96, to start the motors for driving the shaker conveyers 14, 14 when said lateral conveyer 13 reaches a predetermined speed. Said roller switches may be so set that one branch shaker conveyer will start ahead of the next succeeding conveyer, to enable the lateral conveyer to clear itself of loose material that may be left thereon and to be evenly loaded and also to prevent heavy starting current surges. As herein shown the shaker conveyers 14, 14 are timed to start after

the three main belt conveyers are started and after the lateral conveyer 13 has started and come up to speed.

Starters 100, 100 for the shaker conveyers 16, 16 are connected to the main power line, when the control line circuit has been completed to the control line 57 and starter 59, by means of a contactor 101. Said starters 100, 100 like the starters 96, 96 are directly connected to the main power line and start said shaker conveyers in a manner similar to the shaker conveyers 14, 14 by roller switches 102, 102 arranged to complete control circuits within said starters 100, 100 from said main power line to the motors for driving said shaker conveyers, when the lateral conveyer 15 starts and reaches a predetermined speed.

In a similar manner the shaker conveyers 18, 18 are started by roller switches 103, 103 driven by the lateral conveyer 17 and completing circuits within starters 104, 104 in the same manner the control circuits to the starters 99, 99 and 102, 102 are completed for connecting the motors for said shaker conveyers in the main power line, for starting said shaker conveyers, upon the closing of a contactor 105, when the lateral belt conveyer 17 attains the required speed.

A local control switch 106 is provided for each main belt conveyer starter to permit the associated belt conveyer to be started when the mine is down and the other conveyers of the system are not in operation, in cases where it might be desired to repair the conveyer or belt without starting the rest of the conveyers in the system. In a similar manner, a local control switch 107 is provided for each lateral conveyer starter, to connect said lateral conveyer starter to the control line 71 independently of the main belt conveyer, to start said lateral conveyer and its associated shaker conveyers at times when the mine is down and it is desired to repair the lateral conveyers or the shaker conveyers discharging into said lateral conveyers.

A series of lights is provided to indicate when the main belt conveyers are operating and when the last lateral conveyer of the system is in operation. Said series of lights includes a light 109 at the drive end of each main belt conveyer which is connected to the starter 67 for the conveyer 10 through a conductor 110, which will light when said conveyer is in operation. It also includes a light 111 at the drive end of each main belt conveyer which is connected to the starter 55 for the conveyer 11 through a conductor 112, which will light when said conveyer is in operation. A light 113 connected to the starter 62 through a conductor 114 is also provided at the drive end of each belt conveyer, which will light when the conveyer 12 is in operation. Lights 115 connected to a main power line 116 and arranged to light when the contactor 105 closes and the lateral conveyer 17 has been started and power is connected to the shaker conveyers 18, 18, are also provided and are adapted to light when the lateral conveyer 17 is in operation and the circuit to the shaker conveyers 18, 18 is closed. Thus if any of the aforementioned conveyers should stop, the light connected with the starter for said associated conveyer will go out, to serve as a warning, and all of the conveyers discharging into conveyer which has stopped will also stop.

It should here be noted that while the first conveyer in the line of conveyers always starts first, that when the switch 75 is opened the circuit to

the coil 76 of the relay 77 will be opened to cause the contacts of said relay to open and open the circuit to the control line 79 and disconnect the roller switch 63 from the control line 71 to stop the lateral belt conveyer 17 and the shaker conveyers 18, 18. It will also open the circuit to the coil 81 of the time delay relay 82, the contacts of which will open after a predetermined time interval, to disconnect the roller switches 56 and 60 from the control line 71, to stop the shaker conveyers 16, 16, lateral belt conveyer 15, and the main belt conveyer 12. It will also open a circuit to deenergize a coil of the time delay relay 86 to open said relay after a predetermined time delay interval and disconnect the roller switches 49 and 53 from the control line 71, to first stop the main belt conveyer 11 and then stop the shaker conveyers 14, 14 and the lateral conveyer 13. It will also open the circuit to the coil 89 of the time delay relay 90, the contacts of which will open after a predetermined time interval to disconnect the starter 67 from the control line 71, and stop the main belt conveyer 10.

A simplified system for controlling operation of a number of conveyers has thus been provided which is safe for operation in mines and which is so arranged that the first conveyer in the line is the first to start and the last to stop, and is also so arranged that the conveyers are started by control means dependent upon and controlled by the speed of the next preceding conveyer, so that it is never possible for one conveyer to discharge into a conveyer which is not in operation.

While I have herein shown and described one form in which my invention may be embodied, it will be understood that the construction thereof and the arrangement of the various parts may be altered without departing from the spirit and scope thereof. Furthermore, I do not wish to be construed as limiting my invention to the specific embodiment illustrated, excepting as it may be limited in the appended claims.

I claim as my invention:

1. In an explosion-proof electrical control system for controlling operation of a series of conveyers, one discharging into the other, and including a plurality of main line conveyers, a separate starter for starting each of said main line conveyers, a plurality of lateral conveyers discharging into said main line conveyers, a separate starter for starting each of said lateral conveyers, a main power line connected with each of said starters, a control line, and means for starting said main line and lateral conveyers in a predetermined sequence including a plurality of roller switches driven by said main line conveyers, certain of said roller switches being adapted to connect the starters to the next succeeding main line conveyers to said control line and certain other of said switches being adapted to connect the starters to said first lateral conveyers to said control line when said main line conveyers into which said lateral conveyers discharge reach a predetermined speed, a control panel having a manually operated switch for connecting said panel to said control line, said control panel also including a relay for each main line conveyer, for connecting said roller switches driven by said main line conveyer to said control line upon closing of said starting switch and a relay for connecting said first main conveyer starter to said control line to start said first main line conveyer.

2. In an explosion-proof electrical control system for controlling operation of a series of conveyers, one discharging into the other, and including a plurality of main line conveyers, a separate starter for starting each of said main line conveyers, a plurality of lateral conveyers discharging into said main line conveyers, a separate starter for starting each of said lateral conveyers, a main power line connected with each of said starters, a control line, and means for starting said main line and lateral conveyers in a predetermined sequence including a plurality of roller switches driven by said main line conveyers, certain of said roller switches being adapted to connect the starters to the next succeeding main line conveyers to said control line and certain other of said switches being adapted to connect the starters to said first lateral conveyers to said control line when said main line conveyers into which said lateral conveyers discharge reach a predetermined speed, a control panel having a manually operated switch for connecting said panel to said control line, said control panel also including a relay for each main line conveyer, for connecting said roller switches driven by said main line conveyer to said control line upon closing of said starting switch, and a relay for connecting said first main conveyer starter to said control line to start said first main line conveyer, said relays with the exception of the relay connecting the roller switch controlling operation of the last conveyer in the series being time delay relays so arranged as to open at predetermined time intervals after the circuit thereto has been broken, to cause the conveyers to stop in a progressive order starting with the last conveyer.

3. In an explosion-proof electrical control system for controlling operation of a series of conveyers, one discharging into the other, and including a plurality of main line conveyors, a separate starter for starting each of said main line conveyers, a plurality of lateral conveyers discharging into said main line conveyers, a separate starter for starting each of said lateral conveyers, a main power line connected with each of said starters, a control line, and means for starting said main line conveyers and said lateral conveyers in a predetermined sequence including a plurality of roller switches driven by the first of said main line conveyers, a plurality of roller switches driven by said next succeeding main line conveyer, certain of said roller switches being adapted to connect the starters for the next succeeding main line conveyer to the control line, when said next preceding main line conveyer reaches a predetermined speed, and certain other of said roller switches being adapted to connect the starters for said associated lateral conveyers to said control line when the associated main line conveyers reach a predetermined speed, a control panel having a manually operated switch for connecting said panel to said control line, said control panel also including a relay for connecting said starter for said first main line conveyer to said control line, to start said first main line conveyer, and a separate relay for each pair of roller switches, for connecting said roller switches to said control line to start said next succeeding main line conveyers and said lateral conveyer in a predetermined order after said first main line conveyer has reached a predetermined speed.

4. In an explosion-proof electrical control system for controlling operation of a series of conveyers, one discharging into the other, and including a plurality of main line conveyers, a separate starter for starting each of said main line conveyers, a plurality of lateral conveyers dis-

charging into said main line conveyers, a separate starter for starting each of said lateral conveyers, a main power line connected with each of said starters, a control line, and means for starting said main line conveyer and said lateral conveyers in a predetermined sequence including a plurality of roller switches driven by the first of said main line conveyers, a plurality of roller switches driven by said next succeeding main line conveyer, certain of said roller switches being adapted to connect the starters for the next succeeding main line conveyer to the control line, when said next preceding main line conveyer reaches a predetermined speed, and certain other of said roller switches being adapted to connect the starters for said associated lateral conveyers to said control line when the associated main line conveyers reach a predetermined speed, a control panel having a manually operated switch for connecting said panel to said control line, said control panel also including a relay for connecting said starter for said first main line conveyer to said control line, to start said first main line conveyer, and a separate relay for each pair of roller

switches, for connecting said roller switches to said control line to start said next succeeding main line conveyers and said lateral conveyer in a predetermined order after said first main line conveyer has reached a predetermined speed, said relays with the exception of the relay connecting the roller switch of the last conveyer in the series being time delay relays so arranged as to open after predetermined time intervals after the circuit thereto has been broken, to cause the conveyers to stop in a progressive order starting with the last conveyer.

CLAUDE O. WOOD.

REFERENCES CITED

The following references are of record in the file of this patent:

UNITED STATES PATENTS

Number	Name	Date
1,620,531	Fisher	Mar. 8, 1927
2,371,956	Dees	Mar. 20, 1945
2,372,130	Smith	Mar. 20, 1945
2,372,131	Smith	Mar. 20, 1945