(12) PATENT APPLICATION **(11)** Application No. **AU 200042720 A1**
(19) AUSTRALIAN PATENT OFFICE

(54) Title
Method and apparatus for joining solid oxide fuel cell interconnects

(51)[7] International Patent Classification(s)
H01M 008/02 **H01M 002/26**
H01M 002/22

(21) Application No: **200042720** (22) Application Date: **2000.06.28**

(30) Priority Data

(31) Number	(32) Date	(33) Country
09353561	**1999.07.14**	**US**

(43) Publication Date : **2001.01.18**
(43) Publication Journal Date : **2001.01.18**

(71) Applicant(s)
SOFCo

(72) Inventor(s)
Ashok C. Khandkar; Singsravelu Elangovan; Joseph Jay Hartvigsen

(74) Agent/Attorney
GRIFFITH HACK,GPO Box 4164,SYDNEY NSW 2001

ABSTRACT

A solid oxide fuel cell stack comprising a first solid oxide fuel cell, a second solid oxide fuel cell, an interconnect, and a joining member. The first solid oxide fuel cell includes a cathode. The second solid oxide fuel cell includes an anode. The interconnect is positioned between the cathode of the first solid oxide fuel cell and the anode of the second solid oxide fuel cell. The joining member joining the interconnect to at least one of the cathode of the first solid oxide fuel cell and the anode of the second solid oxide fuel cell, wherein the joining member comprises a porous substrate. The invention likewise includes methods of manufacturing a solid oxide fuel cell stack.

AUSTRALIA

Patents Act 1990

COMPLETE SPECIFICATION

STANDARD PATENT

Applicant(s):

SOFCo

Invention Title:

METHOD AND APPARATUS FOR JOINING SOLID OXIDE FUEL CELL INTERCONNECTS

The following statement is a full description of this invention, including the best method of performing it known to me/us:

TITLE OF THE INVENTION

METHOD AND APPARATUS FOR JOINING SOLID OXIDE FUEL CELL INTERCONNECTS AND CELLS

BACKGROUND OF THE INVENTION

1. Field of the invention

The invention is directed to solid oxide fuel cells (SOFC's), and more particularly, to a method and apparatus for joining solid oxide fuel cell interconnects and cells.

2. Background Art

Solid oxide fuel cells have the potential for high fuel efficiency, low emissions and distributed generation options. However, due to large system capital costs and market economics, the advantages of solid oxide fuel cells has been difficult to achieve.

One aspect of solid oxide fuel cells which has received much focus has been the lowering of operating temperatures, while increasing stack performance. This, in turn, cuts both stack and balance of plant costs. One manner in which to reduce operating temperatures while obtaining high performance is to join the cells and stacks in a manner which produces low resistance contacts between adjacent cells, and low resistance flow paths for the reactant gasses — generally termed a solid oxide fuel cell stack. Stacks are generally joined by using a "flow field" which serves multiple purposes. The "flow field" provides passageways for the reactant gasses, low resistance electrical conduction pathways and effective gas impermeable sealing at the stack perimeter so as to contain the gasses. Generally, such a "flow field" is integral with the interconnect, wherein the cells, the interconnect and the flow fields are fabricated and joined together using ceramic bonding layers. With such a stack, it has been difficult to achieve conformity between layers.

Other solutions have involved the co-firing of unfired interconnects, cells and flow fields after joining. For example, Argonne National Labs discloses the use of dense corrugated electrolyte members of zirconia serving as both a flow field and electrolyte. In one embodiment, such members comprise doped lanthanum chromite which is co-fired with the cell. While these methods have demonstrated some success, difficulties have been incurred when such a solution is applied to an entire stack.

The difficulties with producing stacks in this manner are due to the fundamentally conflicting set of microstructural and processing requirements for each of the three layers. More specifically, attempts to co-fire these materials results in either inadequate microstructural development or extensive migration of chemical species amongst adjacent layers, rendering the performance of the stack to be poor. Even attempts to utilize liquid phase dopants further exacerbates the interdiffusion problems and causes poor performance of the stack.

SUMMARY OF THE INVENTION

The invention comprises a solid oxide fuel cell stack which includes a first solid oxide fuel cell, a second solid oxide fuel cell, an interconnect and means for joining the interconnect to the first and second solid oxide fuel cells. The first solid oxide fuel cell includes a cathode. The second solid oxide fuel cell includes an anode. The interconnect is positioned between the cathode of the first solid oxide fuel cell and the anode of the second solid oxide fuel cell. The joining means comprises a porous substrate which joins the interconnect to at least one of the cathode of the first solid oxide fuel cell and the anode of the second solid oxide fuel cell.

In a preferred embodiment, the porous substrate of the joining means has a porosity of 20-80%. In another preferred embodiment, the porous substrate of the joining means has a pore size substantially between 100 and 1000 μm.

In another preferred embodiment, the solid oxide fuel cell stack further includes means for sealing at least one edge of the porous substrate between the interconnect and one of the cathode of the first solid oxide fuel cell and the anode of the second solid oxide fuel cell. In one such embodiment, the sealing means comprises a gas impermeable yttria stabilized zirconia.

In yet another preferred embodiment, the joining means further includes a conductive coating. In one such embodiment, the conductive coating has a thickness of at least 10 μm and preferably in the range of approximately 5 μm to approximately 25 μm. Preferably, the conductive coating comprises any one of doped lanthanum cobaltite, lanthanum manganite, praseodymium cobaltite or manganite and/or other doped conductive oxides or metals.

In another preferred embodiment, the joining means includes at least one groove, and, in certain embodiments, the joining means may include two or more grooves, each having at least a portion distally spaced apart. In any such embodiment, the grooves have a depth of at least 500 μm and preferably in the range of approximately 250 μm to approximately 1000 μm.

The invention further includes a method of manufacturing a porous substrate for joining a solid oxide fuel cell to an interconnect. The method includes the step of providing a flow field form. Once provided, the flow field form is impregnated with an impregnate. Subsequently, the flow field form with impregnate is fired. Next, the flow field form is volatilized, to, in turn, form a porous substrate.

In a preferred embodiment, the step of impregnating the flow field comprises the step of

introducing the impregnate to the flow field form. Once introduced, the excess impregnate is expelled from the flow field form. The foregoing steps are repeated until the flow field form is impregnated as desired.

In another preferred embodiment, method further includes the step of impregnating at least one of a lower surface and an upper surface of the flow field form with a conductive coating.

In yet another preferred embodiment, the method further includes the step of introducing grooves into at least one of a lower surface and an upper surface of the flow field form.

In a preferred embodiment, the flow field form comprises an open celled reticulated foam. Preferably, the open celled reticulated foam is selected from one of the group consisting of: polyurethanes, polyesters, polyvinyl chlorides, acetates and other copolymers.

In another preferred embodiment, the step of volatilizing the flow field form comprises the step of substantially precluding the formation of carbonaceous residue.

In yet another preferred embodiment, the impregnate may comprise a thixotropic slurry having a ceramic component. Preferably, the impregnate comprises a viscosity of at least 1000 centipoise, and preferably in the range of 1500-3000 centipoise. In addition, in any such embodiment, the impregnate may include at least one rheological agent, and, the rheological agent is selected from one of the group consisting of carboxylmethyl cellulose and hydroxymethyl cellulose. In such an embodiment, the rheological agent comprises approximately 0.01% to approximately 10 % of the weight of the impregnate.

In another preferred embodiment, the impregnate includes at least one binder. Preferably, the binder is selected from one of the group consisting of polyvinyl butyrol and polyvinyl acetate. In an embodiment which includes a binder, the binder comprises approximately 0.01% to approximately 10% of the weight of the joining material.

The invention may likewise further include a method of manufacturing a solid oxide fuel cell stack. The method comprises the step of providing at least two fired solid oxide fuel cells, the solid oxide fuel cells each having an anode, a cathode and an electrolyte. Once provided, an interconnect is associated with the cathode of one of the at least two fired solid oxide fuel cells and with the anode of the other of the at least two fired solid oxide fuel cells. Next, a flow field form having an impregnate is provided. Once provided, the flow field form is associated

between and into contact with the interconnect and the cathode or the anode of the at least two fired solid oxide fuel cells. Subsequently, the assembled stack of at least two fired solid oxide fuel cells, the interconnect and the flow field form are fired. Next, the flow field form is volatilized, to, in turn, render a fired solid oxide fuel cell stack.

In a preferred embodiment, the step of associating the flow field form comprises the step of applying the impregnate to one of the interconnect and the respective anode or cathode. Once applied, the flow field form is positioned into contact with each of the interconnect and the respective anode or cathode.

In a preferred embodiment, the step of providing a flow field form comprises the step impregnating the flow field form with an impregnate. In another preferred embodiment, the step of providing a flow field form comprises the step of impregnating at least one of a lower surface and an upper surface with a conductive coating. In yet another preferred embodiment, the step of providing a flow field form comprises the step of introducing at least one groove in at least one of a lower surface and an upper surface of a conductive coating.

In another preferred embodiment, the step of volatilizing of the flow field form occurs at a temperature lower than the temperature required for the firing of the stack.

The invention further includes a method of manufacturing a solid oxide fuel cell stack. The method includes the step of providing at least two solid oxide fuel cells, the solid oxide fuel cells each having an anode, a cathode and an electrolyte, at least one of the at least two solid oxide fuel cells being unfired. Once provided, the interconnect is associated with the cathode of one of the at least two solid oxide fuel cells and with the anode of the other of the at least two solid oxide fuel cells. Next, a flow field form having an impregnate is provided. Once provided, the flow field form is associated between and into contact with the interconnect and the cathode or the anode of the at least two solid oxide fuel cells. Next, the assembled stack of at least two solid oxide fuel cells, the interconnect and the flow field form are co-fired. Subsequently, the flow field form is volatilized, to, in turn, render a fired solid oxide fuel cell stack.

In a preferred embodiment, the step of providing at least two solid oxide fuel cells comprises the steps of tape casting an electrolyte and screen printing an anode and a cathode, to, in turn, form an unfired solid oxide fuel cell.

In another preferred embodiment, the step of providing an interconnect comprises the

step of tape casting an interconnect, to, in turn, form an unfired interconnect.

In yet another preferred embodiment, the step of providing at least two solid oxide fuel cells comprises the step of providing at least two unfired solid oxide fuel cells. In another preferred embodiment, the step of providing an interconnect comprises the step of providing a via filled interconnect.

BRIEF DESCRIPTION OF THE DRAWINGS

Fig. 1 of the drawings is s side elevational view of a solid oxide fuel cell stack of the present invention;

Fig 2 of the drawings is a perspective view of the flow field form and the impregnate of the present invention; and

Fig. 3 of the drawings is a perspective view of another embodiment of the flow field form.

DETAILED DESCRIPTION OF THE DRAWINGS

While this invention is susceptible of embodiment in many different forms, there is shown in the drawings and will herein be described in detail, one specific embodiment with the understanding that the present disclosure can be considered as an exemplification of the principles of the invention and is not intended to limit the invention to the embodiment illustrated.

Solid oxide fuel cell stack 10 is shown in Fig. 1 as comprising first solid oxide fuel cell 12, second solid oxide fuel cell 14, interconnect 16, means 18 for joining the interconnect to the cell and means 20 for sealing between the interconnect and the first and second solid oxide fuel cells.

First solid oxide fuel cell 12 includes anode 30, cathode 32 and electrolyte 34. Similarly second solid oxide fuel cell 14 includes anode 36, cathode 38 and electrolyte 40. The solid oxide fuel cells 12 and 14 may comprise conventional solid oxide fuel cells of various designs, having various voltage outputs and operational temperatures.

Interconnect 16 comprises an interconnect first surface 48, second surface 50 and thickness 52. First and second surfaces 48, 50, respectively are substantially smooth and planar, although other surface configurations are likewise contemplated. Thus, thickness 52 generally comprises a substantially uniform thickness which is generally 250-1000 microns. In addition, the interconnect generally comprises conductive ceramic or metal foils, while other materials are likewise contemplated for use.

Means 18 for joining the interconnect to the cells comprise first porous substrate 42 positioned between the interconnect and the cathode of the first solid oxide fuel cell and second porous substrate 43 positioned between the interconnect and the anode of the second adjacent solid oxide fuel cell. Each of the first and second porous substrates include openings extending therethrough which facilitate the passage of air and fuel through the stack.

More specifically, first porous substrate 42 generally comprises a material having a porosity between 20-80%, and preferably between 40-60%. Additionally, the pore size ranges from 100-1000 μm in size, and, more preferably 250-1000 μm. Of course other pore sizes and porosities are contemplated, as long as the porosity allows for suitable passage for gas flow with a low pressure drop.

Similarly, second porous substrate 43 generally comprises a material having a porosity between 20-80% and more preferably 40-60%. Additionally, the pore size ranges from 100-1000 μm in size and preferably between 250 to 1000 μm. Again, other pore sizes and porosities are likewise contemplated as long as a suitable passage of air can be passed through the substrate. As will be explained in more detail with respect to the method, the material comprises a ceramic material which is capable of conducting charge between the cells.

With either one or both of porous substrates 42, 43, grooves 71 may be present. These grooves serve to increase the porosity of the porous substrate. In addition, either one or both of porous substrates 42, 43 may additionally include conductive coating 47 applied to one or both of the lower and upper surfaces of the porous substrates. As will be explained in more detail below, the conductive coating is useful where a low pressure drop and high electron conductivity is desired.

Means 20 for sealing between the interconnect and the cell comprise edge seals 46, which include a yttria stabilized zirconia which is substantially gas impermeable. Of course, other edge seal materials are likewise contemplated for use, such as glasses and glass ceramics, metal foils or ceramic fiber constructs. The sealing means serve to contain and direct the flow of air on one side of the interconnect and gas on the opposite side of the interconnect, so that each is maintained along the desired path. They further serve to prevent the undesired comingling of air and fuel.

In operation, as the air and fuel are directed through the joining means on either side of the respective interconnect, they each proceed through the openings and pores of the joining means. Thus, while providing good joining characteristics for joining the interconnect to the respective cell, the joining means nevertheless provide passageways for the required fuel and air for reaction within the SOFC.

To manufacture SOFC stack of cells 10, first cell 12 and second cell 14 are provided. In this embodiment, the provided cells have already been fired and are provided in a completed (fired) condition.

Next, an interconnect and the sealing means are provided. The interconnect is preferably of a smooth surface configuration and of a uniform thickness. However, while such an interconnect is generally cost effective, it is likewise contemplated that other interconnects, such

as interconnects having various surface configurations and surface variations are likewise contemplated for use. In this embodiment, as with the cells, the interconnect and the sealing means are likewise in a fired condition.

To manufacture the joining means, as shown in Fig. 2, flow field form 50 having a desired dimension is provided along with impregnate 52. Essentially, flow field form 50 comprises an open cell foam member which has been cut and trimmed to the desired dimensions. For example, the foam member may be uniform with substantially planar surfaces and a substantially uniform thickness. Likewise, as shown in Fig. 3, flow field form 50 may include grooves 71 which increase the porosity of the material. The grooves may be of a multitude of different shapes and orientations. Such flow field forms are particularly useful wherein the porosity of the flow field form is too low, and an increase in porosity is desired.

The flow field form 50 may comprise a multitude of open celled reticulated foams made from polyurethanes, polyesters or the family of polyvinyl chlorides, acetates as well as other different copolymers. Of course, other materials, such as cellulosic materials, for example, may likewise be utilized. While not necessarily limited to such a construction, it is desirable that flow field form 50 comprises a material that volatilizes or burns out at a temperature at or below that of the temperature at which the impregnate is fired. Further, it is desirable that the material volatilize in the form and leaves behind no carbonaceous residue. Of course, materials which leave certain levels of carbonaceous residue, as well as materials which volatilize or burn out at temperatures which are more elevated may likewise be utilized.

Impregnate 52 comprises a slurry which includes binders, rheological agents and ceramic joining material. The binders aid in the binding function and may comprise any number of different materials, such as, for example, polyvinyl butyrol or polyvinyl acetate. The binder amounts vary between 0 and 10% of the weight of the slurry, however amounts outside of this range, i.e. greater than 10% are likewise contemplated for use.

The rheological agents are used to make the slurry thixotropic. A thixotropic slurry is one which has a high resistance to flow under low shear rates and a low resistance to flow under high shear rates. Thus, a thixotropic slurry will have a viscosity such that it rapidly enters a void or empty space of the flow field form and coats the walls of the form. Yet, once coated, the slurry does not drain out from the form after impregnation is complete. While various materials

are contemplated, the rheological agents may comprise carboxymethyl cellulose or hydroxymethyl cellulose. While not limited hereto, the rheological agents may comprise between 0 and 10% of the weight of the slurry.

The ceramic joining material, as will be understood comprises the porous structure after firing. Thus the ceramic joining material that is utilized may comprise any one of a number of ceramic materials which are suitable for use in association with structures which are associated with interconnects between SOFC's in a stack of SOFC cells.

Once impregnate 52 has been prepared, the form is impregnated with the impregnate. Once initially impregnated, excess impregnate is expelled from the flow field form. Subsequently, this procedure is repeated one or more times to insure a uniform and complete impregnation/coating of flow field form 50 with impregnate 52.

In certain embodiments, it may be desirable to impregnate a conductive coating to the upper and lower surfaces of the flow field form which will improve conductivity. An increase of impregnating, or "loading", of conductive impregnate yields a graded microstructure optimized for low pressure drop and low electrical resistance.

Once prepared, the stack is assembled by associating the flow field form with the cells, the sealing means and the interconnect. Specifically, and as shown in Fig. 1, the sequence of the assembly is as follows: first cell (anode, electrolyte, cathode), impregnated flow field form with associated sealing means, interconnect, impregnated flow field form with associated sealing means, and second cell (anode, electrolyte, cathode). Of course, it is contemplated that additional cells and interconnects may be joined either before first cell 12 or after second cell 14 in a similar arrangement. In addition, it is likewise contemplated that the impregnated flow field form may be utilized only between the interconnect and one of the two cells, whereas the interface of the interconnect and the other cell may comprise a conventional or otherwise different interface.

To specifically attach the cathode of the first cell to the impregnated flow field form, the surface of the cathode is first coated with a similar composition as the impregnate, then the two are joined. This promotes a uniform and effective contact to develop at the surface. However, in other embodiments, the impregnate that is in the flow field form may itself develop a uniform and effective contact with the surface of the cathode without an additional coating being applied to the surface of the cathode. In a similar manner, the surface of the interconnect is coated with

an impregnate (or in other embodiments not coated), then the interconnect and the flow field form are joined.

Either prior to attachment of the flow field form to the interconnect or at about the same time, the sealing means are positioned as desired so as to effectively seal the area between the interconnect and the cathode, which in turn, contains the gas and fuel in the operating SOFC.

In a similar manner as with the flow field form between the cathode of the first cell and the interconnect, the flow field form that is positioned between the anode of the second cell and the interconnect is assembled in a substantially identical manner. The sealing means are likewise applied in a similar manner as the sealing means between the interconnect and the cathode of the first cell.

Additional cells and interconnects can be joined onto the free sides of the first and second cells so as to assemble a stack of any number of SOFC cells. As will be understood, any number of SOFC cells can be assembled so as to achieve a desired power output and a desired performance level.

Once the stack assembly is complete. The entire assembly is placed in a furnace for heating. Upon heating, the flow field form volatilizes and burns out, and the ceramic joining material is fired. The result is a rigid, fired ceramic material that takes the shape of the flow field form.

In another embodiment, the method of manufacture may comprise the use of unfired (green) cells and an unfired interconnect. In such an embodiment, the cells comprise a tape cast electrolyte having screen printed anode and cathode on opposite sides of the electrolyte. Of course, other assemblies of unfired (green) cells, such as cells which do not comprise tape cast electrolytes having screen printed anodes/cathodes. Additionally, the interconnect of such an embodiment may comprise a tape cast interconnect, while other interconnect configurations are likewise contemplated for use. For example, the interconnect may comprise an unfired (green) interconnect having a construction which includes via filled regions. Such an interconnect is described in co-pending application Serial No. 09/153,959 entitled "VIA FILLED INTERCONNECT FOR SOLID OXIDE FUEL CELLS", filed on September 16, 1998, which teachings are incorporated herein by reference.

The sealing means of such an embodiment likewise comprises an unfired (green) sealing means. Of course, various materials are contemplated for use in the sealing means. As explained, the sealing means provides for gas and fuel separation and containment for the cell.

Once the cells and the interconnect are prepared, the flow field form is impregnated and the stack is assembled in a manner similar to that which is described above with respect to the first embodiment. Once fully assembled into a stack, the entire structure is co-fired. The co-firing of the stack, in turn, fires the cells, and volatilizes the flow field form so as to render a completed and usable stack of SOFC cells. In such an embodiment, due to the adhesion properties of the flow field form, it is possible to assemble a stack of unfired cells, interconnects, and impregnated flow field forms and then co-fire all three structures at once to yield a completed SOFC stack.

The foregoing description and drawings merely explain and illustrate the invention and the invention is not limited thereto, as those skilled in the art who have the disclosure before them will be able to make modifications and variations therein without departing from the scope of the invention.

In the claims which follow and in the preceding summary of the invention, except where the context requires otherwise due to express language or necessary implication, the word "comprising" is used in the sense of "including", i.e. the features specified may be associated with further features in various embodiments of the invention.

CLAIMS

1. A solid oxide fuel cell stack comprising:

- a first solid oxide fuel cell having a cathode;

- a second solid oxide fuel cell having an anode;

- an interconnect positioned between the cathode of the first solid oxide fuel cell and the anode of the second solid oxide fuel cell; and

- means for joining the interconnect to at least one of the cathode of the first solid oxide fuel cell and the anode of the second solid oxide fuel cell, wherein the joining means comprises a porous substrate.

2. The solid oxide fuel cell stack of claim 1 wherein the porous substrate of the joining means has a porosity of 20-80%.

3. The solid oxide fuel cell stack of claim 1 wherein the porous substrate of the joining means has a pore size substantially between 100 and 1000 μm.

4. The solid oxide fuel cell stack of claim 1 further including means for sealing at least one edge of the porous substrate between the interconnect and one of the cathode of the first solid oxide fuel cell and the anode of the second solid oxide fuel cell.

5. The solid oxide fuel cell stack of claim 4 wherein the sealing means comprises a gas impermeable yttria stabilized zirconia.

6. The solid oxide fuel cell stack of claim 1 wherein the joining means further includes a conductive coating.

7. The solid oxide fuel cell stack according to claim 6 wherein the conductive coating comprises doped lanthanum cobaltite, lanthanum manganite, praseodymium cobaltite or manganite and/or other doped conductive oxides or metals.

8. The solid oxide fuel cell stack according to claim 6 wherein the conductive coating has a thickness of at least 10 μm and preferably in the range of approximately 5 μm to approximately 25 μm.

9. The solid oxide fuel cell stack of claim 1 wherein the joining means includes at least one groove.

10. The solid oxide fuel cell stacks of claim 9 having two or more grooves each having at least a portion distally spaced apart.

11. The solid oxide fuel cell stacks of claim 9 wherein the at least one groove has a depth of at least 500 μm and preferably in the range of approximately 250 μm to approximately 1000 μm.

12. A method of manufacturing a porous substrate for joining a solid oxide fuel cell to an interconnect comprising the steps of:

(a) providing a flow field form;

(b) impregnating the flow field form with an impregnate;

(c) firing the impregnated flow field form; and

(d) volatilizing the flow field form, to in turn form a porous substrate.

13. The method of claim 12 wherein the flow field form comprises an open celled reticulated foam.

14. The method of claim 13 wherein the open celled reticulated foam is selected from one of the group consisting of: polyurethanes, polyesters, polyvinyl chlorides, acetates and other copolymers.

15. The method of claim 12 wherein the step of volatilizing the flow field form comprises the step of substantially precluding the formation of carbonaceous residue.

16. The method of claim 12 wherein the impregnate comprises a thixotropic slurry having a ceramic component.

17. The method of claim 16 wherein the impregnate includes at least one rheological agent.

18. The method of claim 17 wherein the rheological agent is selected from one of the group consisting of carboxylmethyl cellulose and hydroxymethyl cellulose.

19. The method of claim 17 wherein the rheological agent comprises approximately 0.01% to approximately 10 % of the weight of the impregnate.

20. The method of claim 17 wherein the impregnate includes at least one binder.

21. The method of claim 20 wherein the binder is selected from one of the group consisting of polyvinyl butyrol and polyvinyl acetate.

22. The method of claim 20 wherein the binder comprises approximately 0.01% to approximately 10% of the weight of the joining material.

23. The method of claim 12 wherein the impregnate comprises a viscosity of at least 1000 centipoise, and preferably in the range of 1500-3000 centipoise.

24. The method of claim 12 wherein the step of impregnating the flow field comprises the steps of:

(a) introducing the impregnate to the flow field form;

(b) expelling the excess impregnate from the flow field form; and

(c) repeating steps (a) and (b) until the flow field form is impregnated as desired.

25. The method of claim 12 further comprising the step of impregnating at least one of a lower surface and an upper surface of the flow field form with a conductive coating.

26. The method of claim 12 further comprising the step of introducing grooves into at least one of a lower surface and an upper surface of the flow field form.

27. A method of manufacturing a solid oxide fuel cell stack comprising the steps of:

(a) providing at least two fired solid oxide fuel cells, the solid oxide fuel cells each having an anode, a cathode and an electrolyte;

(b) associating an interconnect with the cathode of one of the at least two fired solid oxide fuel cells and with the anode of the other of the at least two fired solid oxide fuel cells;

(c) providing a flow field form having an impregnate;

(d) associating the flow field form between and into contact with the interconnect and the cathode or the anode of the at least two fired solid oxide fuel cells;

(e) firing the assembled stack of at least two fired solid oxide fuel cells, the interconnect and the flow field form; and

(f) volitizing the flow field form, to, in turn, render a fired solid oxide fuel cell stack.

28. The method of claim 27 wherein the step of associating the flow field form comprises the steps of:

(a) applying the impregnate to one of the interconnect and the respective anode or cathode; and

(b) positioning the flow field form into contact with each of the interconnect and the respective anode or cathode.

29. The method of claim 27 wherein the step of providing a flow field form comprises the step of impregnating the flow field form with an impregnate.

30. The method of claim 27 wherein the step of providing a flow field form comprises the step of impregnating at least one of a lower surface and an upper surface with a conductive coating.

31. The method of claim 27 wherein the step of providing a flow field form comprises the

step of introducing at least one groove in at least one of a lower surface and an upper surface of a conductive coating.

32. The method of claim 27 wherein the step of volatilizing of the flow field form occurs at a temperature lower than the temperature required for the firing of the stack.

33. A method of manufacturing a solid oxide fuel cell stack comprising the steps of:

(a) providing at least two solid oxide fuel cells, the solid oxide fuel cells each having an anode, a cathode and an electrolyte, at least one of the at least two solid oxide fuel cells being unfired;

(b) associating an interconnect with the cathode of one of the at least two solid oxide fuel cells and with the anode of the other of the at least two solid oxide fuel cells;

(c) providing a flow field form having an impregnate;

(d) associating the flow field form between and into contact with the interconnect and the cathode or the anode of the at least two solid oxide fuel cells;

(e) co-firing the assembled stack of at least two solid oxide fuel cells, the interconnect and the flow field form; and

(f) volatilizing the flow field form, to, in turn, render a fired solid oxide fuel cell stack.

34 The method of claim 33 wherein the step of providing at least two solid oxide fuel cells comprises the steps

of:

- tape casting an electrolyte; and
- screen printing an anode and a cathode, to, in turn, form an unfired solid oxide fuel cell.

35. The method of claim 33 wherein the step of providing an interconnect comprises the step of tape casting an interconnect, to, in turn, form an unfired interconnect.

36. The method of claim 33 wherein the step of providing at least two solid oxide fuel cells comprises the step of providing at least two unfired solid oxide fuel cells.

37. The method of claim 33 wherein the step of providing an interconnect comprises the step of providing a via filled interconnect.

38. A solid oxide fuel cell stack substantially as herein described with reference to the accompanying drawings.

39. A method for manufacturing a porous substrate for joining a solid oxide fuel cell to an interconnect substantially as herein described with reference to the accompanying drawings.

Dated this 28th day of June 2000

SOFCo
By their Patent Attorneys
GRIFFITH HACK

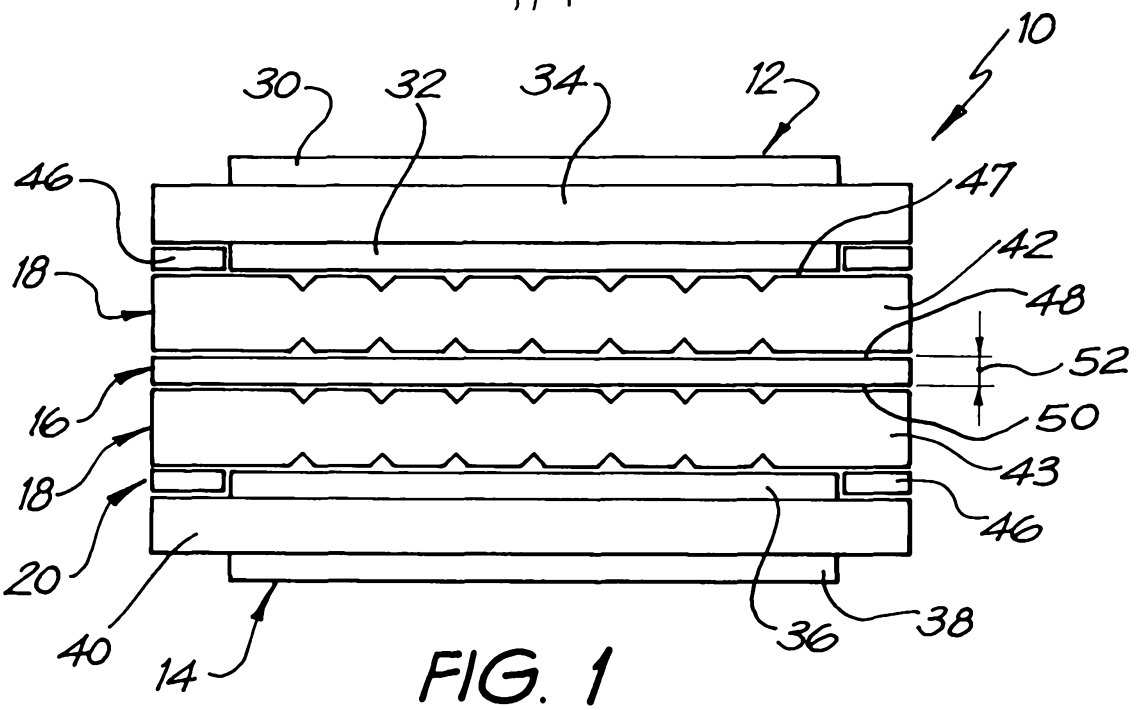

FIG. 1

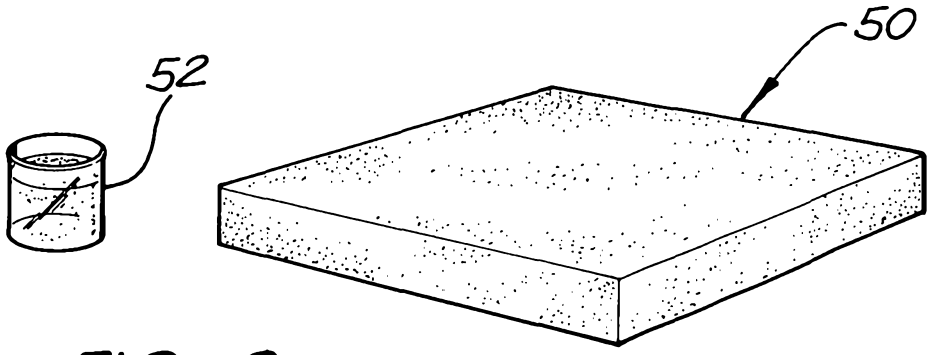

FIG. 2

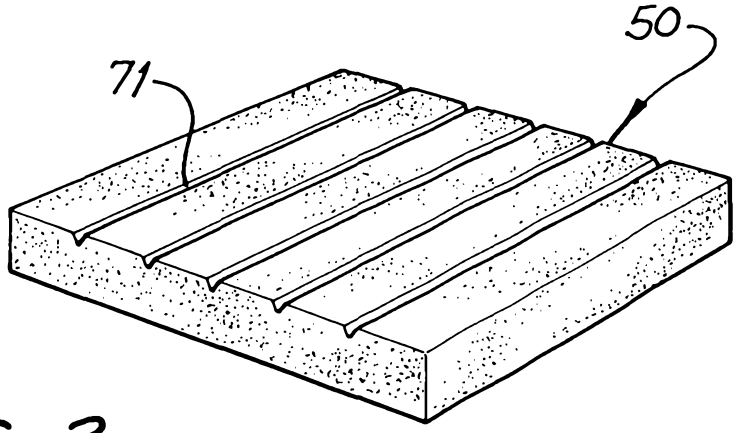

FIG. 3