Oct. 22, 1963 J. L. GLEASON 3,107,831

SEWING AWL

Filed Dec. 30, 1960 2 Sheets-Sheet 1

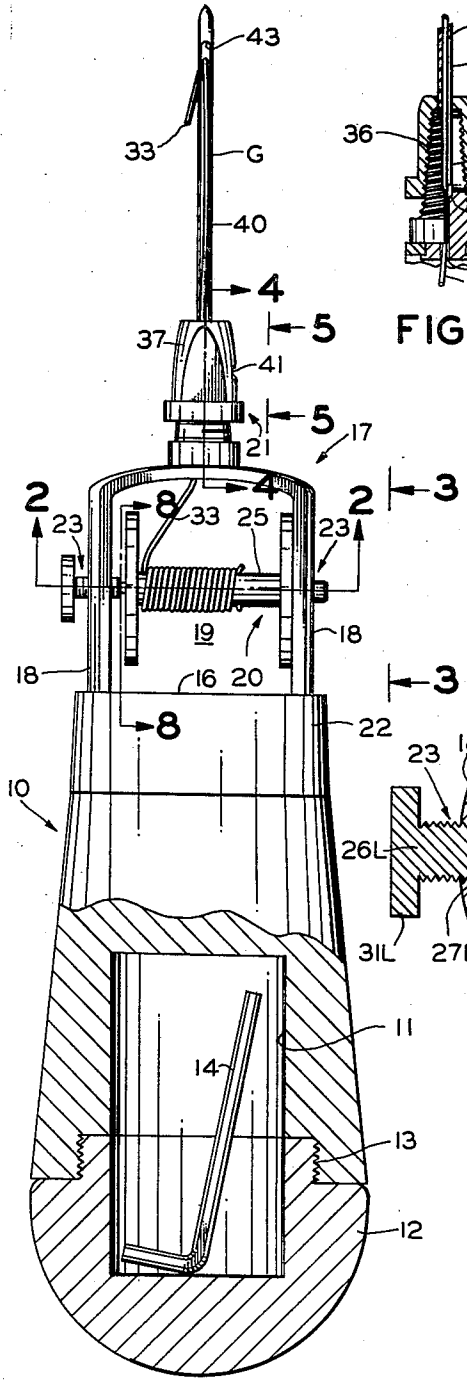

FIG. 1

FIG. 4

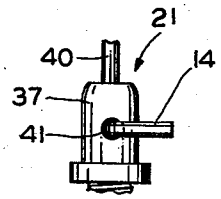

FIG. 5

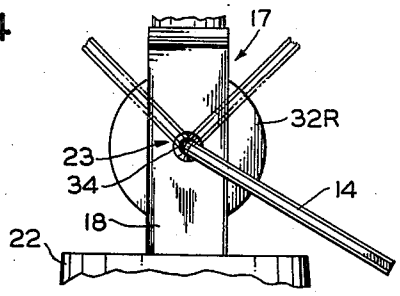

FIG. 3

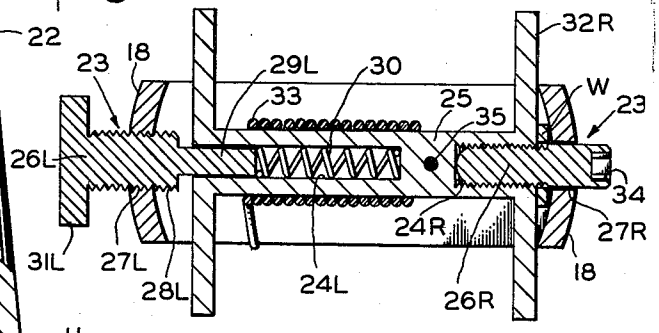

FIG. 2

INVENTOR.
JAY L. GLEASON

Oct. 22, 1963 J. L. GLEASON 3,107,831

SEWING AWL

Filed Dec. 30, 1960 2 Sheets-Sheet 2

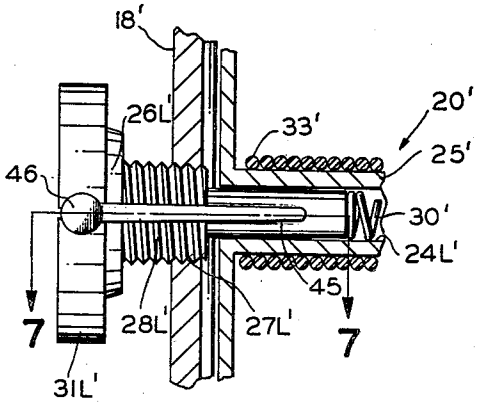

FIG. 6

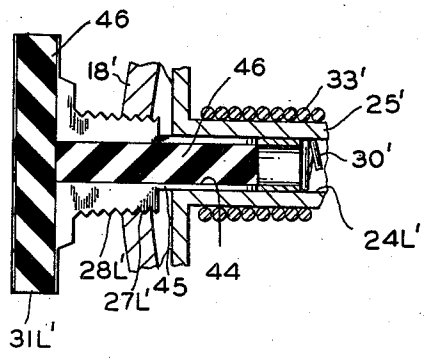

FIG. 7

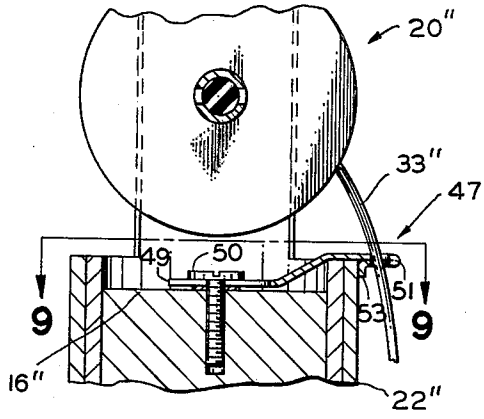

FIG. 8

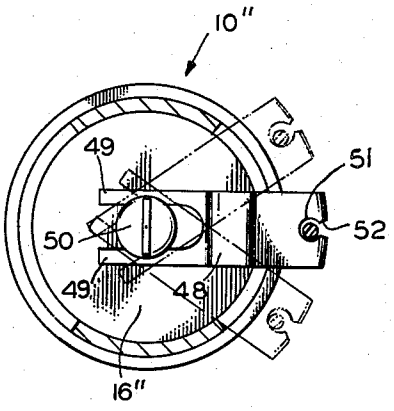

FIG. 9

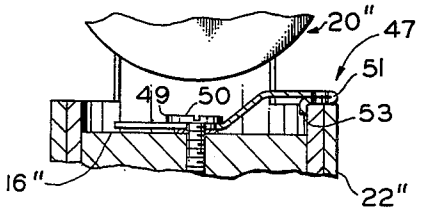

FIG. 10

INVENTOR.
JAY L. GLEASON

United States Patent Office 3,107,831 Patented Oct. 22, 1963

3,107,831

SEWING AWL

Jay L. Gleason, Oxnard, Calif., assignor of one-tenth to Gadget-Of-The-Month Club, Inc., North Hollywood, Calif., a corporation of California

Filed Dec. 30, 1960, Ser. No. 79,651
7 Claims. (Cl. 223—104)

The present invention consists of an improved sewing awl of the type adapted for use in sewing relatively tough materials such as leather, or the like, and which requires the application of considerable force in order to pass a needle tip carrying thread, or the like, through the material. The apparatus of the present invention consists of such a sewing awl including a novel means for rotatively mounting a thread-carrying bobbin or spool means adjacent the forward end of the awl and in a manner which provides a controlled amount of frictional force between one end of the bobbin and an adjacent portion of support means carrying same whereby a desired amount of back force will be exerted on the free end of a thread extending from the bobbin or spool means so that it will not be completely free running and inadvertently unwind in a manner causing a great slack loop of thread which may tend to tangle. However, the arrangement is such that the thread can be unspooled through the application of a predetermined amount of tension to the free end of the thread carried by the bobbin or spool means.

Furthermore, the adjustable thread-tensioning means, in one preferred form, is of a novel construction which will maintain any setting and will not become inadvertently loosened in a manner altering the setting thereof.

One form of the invention also includes a novel thread-winding means adapted for use in very conveniently winding thread on the bobbin in a manner disposing the thread evenly along the length of the bobbin during a thread-winding operation and, in certain cases, disposing the thread in alternate, directionally reversed, layers along the length of the bobbin during the thread-winding operation.

The invention includes handle means and, in one preferred form, the handle means may be hollow whereby to define a hollow storage chamber means therein which is provided with controllably engageable and disengageable closure means therefor. In this form of the invention, the hollow storage chamber means may be used to normally store an insertion type socket wrench for use in rapidly and easily winding thread around the bobbin or spool means and also for alternate use in adjusting a needle chuck carried by the sewing awl and adapted to removably engage a sewing needle. Various other objects, such as needles or the like, may also be stored therein.

It is an object of the present invention to provide an improved sewing awl of the character referred to above which is of extremely simple, cheap, foolproof construction such as to be conducive to widespread use thereof.

Further objects are implicit in the detailed description which follows hereinafter and will be apparent to persons skilled in the art after a careful study thereof.

For the purpose of clarifying the nature of the present invention, several exemplary embodiments are illustrated in the hereinbelow-described figures of the accompanying drawings and are described in detail hereinafter.

FIG. 1 is an enlarged view partly in elevation and partly in vertical section illustrating one exemplary embodiment of the present invention.

FIG. 2 is an enlarged sectional view taken in the direction of the arrows 2—2 of FIG. 1.

FIG. 3 is a fragmentary elevational view taken in the direction of the arrows 3—3 of FIG. 1 after the insertion-

type socket wrench has been removed from the chamber within the handle of FIG. 1 and has been engaged within the socket at the right end of the spool spindle of FIG. 1 for use in rapidly winding thread onto the core of said spool. This threaded winding operation is indicated by the multiple broken line fragmentary alternate position showings of the wrench in FIG. 3.

FIG. 4 is a fragmentary sectional view taken in the direction of the arrows 4—4 of FIG. 1 and shows the outer nut of the chuck and the right side of the inner portion of the chuck in vertical section. The view shows the left side of the inner portion of the chuck in elevation.

FIG. 5 is a fragmentary elevational view taken in the direction of the arrows 5—5 of FIG. 1 and illustrates the chuck after engagement therewith of the wrench for use in tightening the chuck on the base of the needle or for releasing same.

FIG. 6 is an enlarged fragmentary view, partly in elevation and partly in section, illustrating a slight modification of the left portion of the apparatus shown in FIG. 2 of the first form of the invention.

FIG. 7 is a fragmentary sectional view taken in the direction of the arrows 7—7 of FIG. 6.

FIG. 8 is a fragmentary view of a modified form of the invention as seen along a plane similar to that indicated by the arrows 8—8 of FIG. 1.

FIG. 9 is a view taken in the direction of the arrows 9—9 of FIG. 8 and shows in broken lines various different operative locations of the thread-winding strap as it is used to facilitate winding thread on the bobbin or spool of FIG. 8.

FIG. 10 is a view similar to the lower portion of FIG. 8 but illustrates the thread-winding strap after it has been moved into inoperative position.

Referring to FIGS. 1–5 for exemplary purposes, one illustrative embodiment of the invention takes a typical exemplary form wherein it comprises a handle means, indicated generally at **10**, which may be made of wood or any other suitable material and which defines therein a hollow storage **11** provided with controllably engageable and disengageable closure means **12**, removably threadedly engageable therewith by the thread means **13**. The hollow storage chamber means **11** is normally adapted to carry therein an insertion type socket wrench, such as that indicated at **14**, which may be removed for bobbin-removing use, for thread-winding use and for collet or chuck engaging and disengaging use in the manner described in greater detail hereinafter.

The handle means **10** has a front end **16** which is provided with support means, generally indicated at **17**, extending outwardly therefrom and including two transversely spaced support yoke portions **18** defining therebetween a bobbin opening or chamber **19** in which the bobbin, indicated generally at **20**, is adapted to be transversely rotatably mounted in a manner which will be described in greater detail hereinafter.

The support means **17** is provided at an outer end thereof opposite the front end **16** of the handle **10** with controllably openable and closable needle-engageable chuck or collet means indicated generally at **21**.

In the specific example illustrated, the support means **17** is fastened onto the front end **16** of the handle **10** by the clamp means or ferrule means **22**, although various other attachment arrangements and/or structural arrangements are contemplated within the scope of the present invention.

In the specific example illustrated in FIGS. 1–5, the bobbin or spool means indicated generally at **20** is effectively transversely rotatably mounted for rotation about a transverse axis between the yoke portions **18** by rotative mounting means indicated generally at **23** and, in

the specific example illustrated, effectively comprising spindle or mandrel transversely carried by the support yoke portions 18 along a transverse axis extending transversely through the bobbin opening or chamber 19.

In the specific example illustrated in FIGS. 1–5, the rotative mounting means 23 effectively comprises transverse recess means comprising a left recess portion 24L and a right recess portion 24R in the core 25 of the bobbin or spool means 20 correspondingly provided with and receiving first or left and second or right spindle elements 26L and 26R which effectively engage corresponding apertured portions 27L and 27R in the support yoke portions 18 whereby to effectively rotatably mount the bobbin 20 for rotation about a transverse axis. It should be noted that the left one of said spindle elements 26L effectively comprises a digitally adjustable thumb screw having a threaded portion 28L adapted to threadedly engage the left threaded or tapped aperture 27L in the left support yoke portion 18 and has a reduced-size inner portion 29L adapted to extend into the left recess 24L in the spool 20 for engagement with the coil spring 30.

This will effectively force the right flange 32R of the bobbin or spool 20 and the washer W against the inside of the right or support yoke portion 18 in the manner shown in FIG. 2 whereby to cause a controlled amount of friction therebetween which will effectively comprise thread tensioning means imparting a desired amount of back tension to the thread 33 carried by the core 25 of the bobbin or spool 20.

It should be noted that the second or right spindle element 26R comprises an exteriorly threaded socket head screw threaded into the other end of the recess means comprising the other recess 24R and having its outer portion rotatively extending through the corresponding adjacent aperture 27R in the support yoke portion 18 for controlled rotation therewith. The socket 34 in the end of the spindle element 26R effectively comprises a socket type engaging means adapted to removably receive one of the ends of the insertion-type socket wrench 14 for winding the thread 33 around the core 25 of the bobbin or spool means 20 when desired. This operation can be performed very rapidly through the use of the insertion type socket wrench 14 and, upon completion of the operation, the wrench may be removed and replaced within the storage chamber 11.

It should be noted that the bobbin includes thread-fastening means for fastening one end of the thread 33 with respect to the bobbin or spool 20. In the specific example this comprises an aperture or slot 35 in the core 25 to which the inner end of the thread 33 can be attached as by knotting or by tying it around the core 25.

The collet or chuck 21 is of a type including an exteriorly threaded, exteriorly tapered, split inner gripping means 36 provided with an interiorly threaded, interiorly tapered, exterior operating sleeve or nut 37; said means 36 being apertured as indicated at 38 to allow receiving the butt end 39 of a needle 40 therewithin, after which the exterior sleeve or nut 37 can be rotated by inserting the insertion type socket wrench 14 into the socket-type engaging means or socket aperture 41 in the sleeve or nut 37. Such rotation will effectively firmly engage and lock the needle 40 in the operative position shown in FIGS. 1, 4, and 5. The needle disengaging and releasing operation is the reverse of that just described.

The support means 17 is provided with thread egress means which actually comprises the opening 42 into the bottom of the central aperture 38 of the chuck 21. The free end of the thread 33 is adapted to extend through said thread egress holes 42 and 38 upwardly along needle groove G for engagement with the needle aperture 43. The apparatus is then in condition for use as a sewing awl.

FIGS. 6 and 7 illustrate a slight modification of the invention, and similar parts are indicated by similar reference numerals, primed, however.

In this modification, the left spindle element 26L' includes resiliently compressible expansion means adapted to provide frictional engagement of the exterior threaded portion 28L' with the corresponding threaded aperture 27L' in the corresponding support yoke portion 18' whereby to provide for retention of the spindle element 26L' in any adjusted position. In the specific example illustrated in FIGS. 6 and 7, the expansion means referred to above is provided for by centrally drilling the shaft of the left spindle element 26L' as indicated at 44 and transversely partially slotting it as indicated at 45 whereby to allow the introduction thereinto of an interior compressed elastomeric plug 46 which tends to effectively expand the threaded portion 28L' in a resilient manner, thus providing immobilization of the element in the threaded aperture means 27L' in the support yoke portion 18' which is capable of being controllably overridden by the digital application of a predetermined amount of torque to the thumb knob 31L'.

FIGS. 8, 9, and 10 illustrate a further modification of the invention wherein similar parts will be indicated by similar reference numerals, doubly primed, however. In this modification of the invention, the front end of the handle 16'' is effectively provided with thread-winding means, indicated generally at 47, comprising a slotted thread guide member or strap 48 having bifurcated portions 49 pivotally engaged by a mounting screw 50 for rotation with respect to the outer ferrule 22'' in a manner whereby to transversely shift a thread 33'' carried in a thread retaining aperture 51 in the outer end of the thread guide member or strap 48. This provides an arrangement whereby the thread 33'' may be shifted along the length of the core of the spool or bobbin 20'' during a thread-winding operation so that the thread 33'' will be evenly disposed therealong. It should be noted that access to the thread-retaining aperture 51 is provided by a reduced-size thread entry slot 52. It should further be noted that a guide lip or flange 53 extends downwardly from the outer end of the slotted thread guide member or strap 48 for guiding circumferential sliding engagement with the exterior of the ferrule member 22'' during thread-winding use of the device. Upon completion of a thread-winding operation, the outer end of the member 48 may be lifted slightly so that the flange 53 will clear the top edge of the ferrule 22'' and the bifurcated elements may be slidably moved radially inwardly until the entire device lies in the inner position shown in FIG. 10 where it is out of the way and will not interfere with normal use of the sewing awl. Or, on the other hand, the entire member 48 may be disengaged from the center fastening screw 50 and may be placed in the hollow storage chamber in the handle, such as that shown at 11 in the first form of the invention, if desired.

It should be understood that the figures and the specific description thereof set forth in this application are for the purpose of illustrating the present invention and are not to be construed as limiting the present invention to the precise and detailed specific structure shown in the figures and specifically described hereinbefore. Rather, the real invention is intended to include substantially equivalent constructions embodying the basic teachings and inventive concept of the present invention.

I claim:

1. An improved sewing awl, comprising: handle means having a front end provided with support means extending outwardly and forwardly therefrom and including two transversely spaced support yoke portions defining therebetween a bobbin chamber and being provided at an outer forward end with controllably openable and closable needle-engageable chuck means; rotative mounting means transversely carried by said support yoke portions along a transverse axis extending transversely through the bobbin chamber; and bobbin means removably positioned between said support yoke portions and removably rotatably engaged by said rotative mounting means for rotation of

the bobbin means about the transverse axis, said rotative mounting means comprising transverse recess means carried by the bobbin means and first and second spindle elements provided with outer portions engaging corresponding apertured portions of the support yoke portions on each side of the bobbin chamber, and provided with inner portions extending into said recess means for rotatably mounting the bobbin means with respect to said support yoke portions for rotation about the transverse axis extending therethrough, said first spindle element having its outer portion provided with thread means manually controllably threadedly adjustably engaging the corresponding apertured portion of the corresponding support yoke portion, said first spindle element having its inner portion rotatably positioned within one end of said recess means and being provided with compression spring means lying entirely within said transverse recess means of said bobbin means and having one end in abutting contact with the inner end of said inner portion of said first spindle element within said transverse recess means and having the other end effectively forcibly engaging and abutting an inner portion of said bobbin means and forcibly biasing the bobbin means away from the spindle element into effective frictional engagement with respect to the inside of the oppositely positioned support yoke portion, said second spindle element comprising an exteriorly threaded screw threaded into the other end of said recess means of said bobbin means and fixed thereto and having an outer portion extending through the corresponding adjacent apertured support yoke portion for rotation therewithin, said second spindle element also including an engaging means adapted to removably engage an exterior torque-applying auxiliary wrench for winding thread around the bobbin means.

2. A device of the character defined in claim 1 wherein said support means is provided with thread egress means communicating with said bobbin chamber for allowing the end of a length of thread wound on the bobbin means to extend to a position for engagement with a needle adapted to be held by the chuck means.

3. A device of the character defined in claim 1, wherein said handle means is provided with a hollow storage chamber means therein and with controllably engageable and disengageable closure means therefor.

4. A device of the character defined in claim 1, wherein the threaded outer portion of said first spindle element includes resiliently compressible expansion means adapted to provide frictional threaded engagement of said exterior threaded portion of said first spindle element, with the corresponding apertured support yoke portion whereby to provide for retention of said first spindle element in any adjusted position.

5. A device of the character defined in claim 1, wherein the threaded outer portion of said first spindle element includes resiliently compressible expansion means adapted to provide frictional threaded engagement of said exterior threaded portion of said first spindle element, with the corresponding apertured support yoke portion whereby to provide for retention of said first spindle element in any adjusted position, said expansion means comprising slotted chamber means in said first spindle element and interior compressed elastomeric plug means in said slotted chamber means.

6. A device of the character defined in claim 1, including thread-winding guide means comprising a longitudinal thread guide member having a first end pivotally mounted below the bobbin means at a location substantially equidistant from opposite ends of said bobbin means for rotation about an axis perpendicular to said first and second spindle elements and the axis of rotation of said bobbin means, said thread guide member having a second free slotted end longitudinally spaced from said first pivotally mounted end by a distance such as to be pivotally movable by controlled digital operation thereof along an arc extending substantially the entire length of the bobbin means during a thread-winding operation.

7. A device of the character defined in claim 1, wherein said engaging means of said second spindle element comprises an end-mounted socket type engaging means adapted to removably receive an insertion type socket wrench, comprising said exterior torque-applying auxiliary wrench, for said winding of thread around said bobbin means.

References Cited in the file of this patent

UNITED STATES PATENTS

251,304	Skinner	Dec. 20, 1881
573,563	Yeakel	Dec. 22, 1896
655,548	Espey et al.	Aug. 7, 1900
744,581	Mansell	Nov. 17, 1903
778,240	Harrington	Dec. 27, 1904
870,492	Clark	Nov. 5, 1907
908,708	Stewart	Jan. 5, 1909
1,409,668	Carnall	Mar. 14, 1922
2,407,160	Kahn	Sept. 3, 1946
2,568,075	Launder	Sept. 18, 1951

FOREIGN PATENTS

1,100,830	France	Apr. 13, 1955