(12) INTERNATIONAL APPLICATION PUBLISHED UNDER THE PATENT COOPERATION TREATY (PCT)

(19) World Intellectual Property Organization
International Bureau

(43) International Publication Date
23 April 2009 (23.04.2009)

PCT

(10) International Publication Number
WO 2009/049730 A2

(51) International Patent Classification:
F25C 5/00 (2006.01) *F25C 5/18* (2006.01)
F25C 1/14 (2006.01)

(21) International Application Number:
PCT/EP2008/007552

(22) International Filing Date:
12 September 2008 (12.09.2008)

(25) Filing Language: English

(26) Publication Language: English

(30) Priority Data:
MI2007A002031 19 October 2007 (19.10.2007) IT

(71) Applicant and
(72) Inventor: **LANZANI, Emanuele** [IT/IT]; Via Puccini, 22, I-20010 Bettolino di Pogliano Milanese (IT).

(74) Agent: **RAPISARDI, MARIACRISTINA**; Ufficio Brevetti Rapisardi S.r.l., Via Serbelloni, 12, I-20122 Milano (IT).

(81) Designated States *(unless otherwise indicated, for every kind of national protection available)*: AE, AG, AL, AM, AO, AT, AU, AZ, BA, BB, BG, BH, BR, BW, BY, BZ, CA, CH, CN, CO, CR, CU, CZ, DE, DK, DM, DO, DZ, EC, EE, EG, ES, FI, GB, GD, GE, GH, GM, GT, HN, HR, HU, ID, IL, IN, IS, JP, KE, KG, KM, KN, KP, KR, KZ, LA, LC, LK, LR, LS, LT, LU, LY, MA, MD, ME, MG, MK, MN, MW, MX, MY, MZ, NA, NG, NI, NO, NZ, OM, PG, PH, PL, PT, RO, RS, RU, SC, SD, SE, SG, SK, SL, SM, ST, SV, SY, TJ, TM, TN, TR, TT, TZ, UA, UG, US, UZ, VC, VN, ZA, ZM, ZW.

(84) Designated States *(unless otherwise indicated, for every kind of regional protection available)*: ARIPO (BW, GH, GM, KE, LS, MW, MZ, NA, SD, SL, SZ, TZ, UG, ZM, ZW), Eurasian (AM, AZ, BY, KG, KZ, MD, RU, TJ, TM), European (AT, BE, BG, CH, CY, CZ, DE, DK, EE, ES, FI, FR, GB, GR, HR, HU, IE, IS, IT, LT, LU, LV, MC, MT, NL, NO, PL, PT, RO, SE, SI, SK, TR), OAPI (BF, BJ, CF, CG, CI, CM, GA, GN, GQ, GW, ML, MR, NE, SN, TD, TG).

Declaration under Rule 4.17:
— *of inventorship (Rule 4.17(iv))*

[Continued on next page]

(54) **Title:** MACHINE FOR THE PRODUCTION AND DISTRIBUTION OF ICE PARTICLES

FIG 1

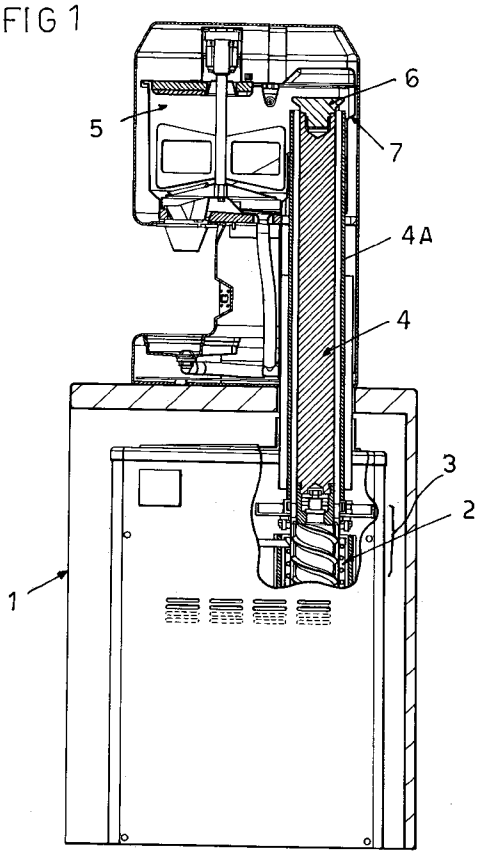

(57) **Abstract:** The machine for the production and distribution of ice particles has a frame comprising a refrigerator group evaporator and forming means for forming ice particles. The machine further has a distributing device for distributing ice particles and comprising a closed housing for storing ice particles, the distributing device is located outside of the frame.

WO 2009/049730 A2

Published:

— *without international search report and to be republished upon receipt of that report*

MACHINE FOR THE PRODUCTION AND DISTRIBUTION OF ICE PARTICLES

DESCRIPTION

The present invention relates to a machine for the production and distribution of ice.

Machines for ice production have existed on the market for some time, of the type comprising a tubular pipe for forming the ice, covered by a refrigerator group evaporator, and equipped with an auger at its interior that transfers the ice to the production outlet, to which a ring nut pierced with drawing holes is associated.

In particular, the machines referred to herein are conceived to produce ice in particles, so-called "nuggets" or "flakers" in granule or cube o cylindric form.

One of the main problems of these machines involves positioning the machine in an area that is easily accessible, making the ice readily available for the user, without the machine installation position being inconvenient.

Generally, this type of machine is equipped with an external ice dispenser on one of its sides, and the machine itself if set directly on the floor.

In this case, the user is forced to bend down to reach the ice that accumulates in a container substantially at ground level, where polluting and contaminating agents tend to concentrate, together with any dust in the atmosphere.

Moreover, ice dispensers of the prior art generally comprise a simple collection chamber wherein the produced ice particles are stored. In order to retrieve the ice particles, the user must use some form of shovel, thereby introducing pollutants. More importantly, in order for the ice particles to be accessed, the collection chamber must either be open to the atmosphere or have a door that enables it to be so. This further leaves the ice susceptible to pollutants.

Furthermore, such ice dispensers do not have good thermal insulation, which results in conglomeration of the ice particles.

For these reasons, the machines are often raised to a higher level above the ground for easier access and better hygiene, and the external ice dispenser

is positioned on the side or the bottom of the machine.

In this case, the advantages of improved hygiene and easy access to the ice at standing height are compromised by the fact that the position of the machine often obstructs transit, and complicated systems must be created to support the machine, including suitable support brackets and safety locking systems which are not necessary when the machine is simply positioned on the ground. Furthermore, when the machine is placed in a raised position, not all parts are easily accessed by the user.

The invention of WO2007090523 discloses the use of a conveying member being an axial extension of the tubular pipe of the ice production unit, such that the ice outlet from the conveying member is at a level substantially higher than the top of the machine. However, although not at ground level, the delivery outlet having an open end is still susceptible to contamination by air pollutants and there is no disclosure of an ice dispenser having thermal insulation. Furthermore, this does not provide a readily available supply of ice particles

as the ice must first be produced each time ice is desired. Moreover, the amount of ice dispensed depends solely on the amount of ice produced.

The technical task proposed by the present invention is therefore that of providing a machine for the production and distribution of ice particles that overcomes the noted technical drawbacks of the prior art.

Within the scope of this technical task, one object of the invention is that of providing a machine for the production and distribution of ice particles that protects the ice from pollutants or dust present in the environment where the machine is installed.

Another object of the invention is that of providing a machine for the production and distribution of ice particles that has a supply position with comfortable user access to the ice dispenser while making all machine parts easily accessible for inspection, maintenance, assembly, disassembly and cleaning, at the same time.

A further object of the invention is that of providing a machine for the production and distribution of ice particles that permits

positioning the ice dispenser at standing height without complicating the machine structure or requiring a specific support structure in a position raised from the ground.

Another object of the invention is that of providing a machine for the production and distribution of ice particles that provides a readily available supply of ice particles.

A further object of the invention is that of providing a machine for the production and distribution of ice particles that dispenses a pre-set amount of ice upon demand.

Another object of the invention is that of providing a machine for the production and distribution of ice particles that avoids conglomeration of said ice particles.

A last but not least object of the invention is that of providing a machine for the production and distribution of ice particles that is simple and economical to construct.

The technical task, as well as these and other objects, are achieved according to the present invention by a machine for the production and

distribution of ice particles, having a frame comprising a refrigerator group evaporator and forming means for forming said ice particles, said machine further having a distributing device for distributing said ice particles and comprising a closed housing for storing said ice particles, characterised in that said distributing device is located outside of said frame.

The closed housing protects the ice particles from pollutants and dust present in the environment where the machine is installed. Furthermore, the closed housing is thermally insulated and the distributing device helps to prevent conglomeration of the ice particles.

The distributing device being located outside of the frame permits positioning the ice dispenser at standing height without complicating the machine structure or requiring a specific support structure in a position raised from the ground.

Advantageously, the closed housing permits ice particles to be produced and stored until distribution is desired, thereby providing a readily available supply of ice particles. Furthermore, the dispensing not being dependent on

the production of ice particles each time ice is demanded, it is possible to calibrate the machine to dispense a pre-set amount of ice each time the distributing device is activated.

Other characteristics of the present invention are moreover defined in the subsequent claims. Further characteristics and advantages of the present invention will be more evident from the description of a preferred, but not exclusive, embodiment of the machine for the production and distribution of ice particles according to the finding, illustrated in the attached non-limiting drawings, wherein:

Figure 1 shows a partially exposed cross sectional view of the machine in accordance with one embodiment of the invention.

Figure 2 shows an enlarged cross-sectional view of the distributing device of the invention in accordance with one embodiment of the invention.

With reference to the above figures, the machine comprises a frame (1) comprising a refrigerator group evaporator (2) and forming means (3) for forming ice particles. In the embodiment shown in figure 1, said forming means (3) are shown as being in the form of a tubular pipe with an auger inside

the refrigerator group evaporator (2), which is capable of transferring the ice produced to an outlet to which a ring nut pierced with drawing holes is associated. A conveying member (4) attached thereto is then capable of transferring the ice particles thus produced via an annular channel (4A) into a closed housing (5) located outside of the frame (1) and towards a deflection member (6) designed to deflect the ice particles onto an inclined surface (7) within the housing. However, it will be appreciated that other forms of refrigerator group evaporator and forming means for forming ice particles can be used with the machine of the present invention.

The housing (5) is preferably insulated and is designed to be able to store the ice particles. Dispensing means, preferably in the form of an agitator (8) can move the ice particles contained within the housing (5) towards a delivery outlet (9) from the housing. An optional funnel (10) connected to the delivery outlet can direct the ice particles towards a receiving container (11) such as a glass. The use of an agitator (8) attached to a motor (8A) helps to prevent conglomeration of the

ice particles in the housing (5). Furthermore, the use of an agitator (8) and a delivery outlet (9) enables the machine to take advantage of gravity to move the ice particles from the housing (5) to the receiving container (11).

The housing (2) can optionally comprise a duct (12) for drainage of any melted ice. The floor (13) of the housing upon which the ice particles rest is preferably inclined such that the delivery outlet (9) is located higher in the housing than the duct (12), thereby preventing melted ice from exiting the delivery outlet.

The agitator (8) preferably has at least one blade (14), said blade having at least one aperture (15). This facilitates minimisation of torque, thereby saving energy. The blade may be of a shape conforming to the shape of the housing floor (13).

The machine can optionally comprise a second duct (16) for the additional drainage of melted ice, said duct being located below the delivery outlet (9).

Importantly, the machine optionally comprises an electronic control unit for controlling the amount of ice produced or distributed. The control unit

can be connected to the distributing means and/or to the refrigerator group evaporator and the forming means.

First detecting means, preferably in the form of at least one sensor (17), can be provided for detecting the presence of a receiving container (11) below the delivery outlet (9) from the housing (5). This is connected to the electronic control unit such that, when the signal from the first detecting means is correct, the dispensing means are activated. In this way, the ice particles are stored in the housing, protected from pollutants, until a receiving container is placed beneath the delivery outlet, at which point ice particles are dispensed thereinto. The machine is further optionally provided with electronic control means, connected to the control unit, for setting the duration of activation of the dispensing means. In this way, either the manufacturer or the user can pre-set the amount of ice to be dispensed each time the distributing device is activated.

Second detecting means, preferably in the form of at least one search light (18), can be provided for detecting the level of ice in the housing (5). This

is connected to the electronic control unit such that, when the signal from the second detecting means is correct, the refrigerator group evaporator and the forming means are activated. In this way, the housing always contains a ready supply of ice particles such that the distribution thereof is not dependent on the particles first having to be produced.

The machine for production and distribution of ice particles thus conceived is susceptible to numerous modifications and variations, all falling within the scope of the inventive concept; furthermore, all details may be substituted by technically equivalent elements. In practice, any material type or size may be used, according to the needs and the state of the art.

CLAIMS

1. Machine for the production and distribution of ice particles, having a frame comprising a refrigerator group evaporator and forming means for forming said ice particles, said machine further having a distributing device for distributing said ice particles and comprising a closed housing for storing said ice particles, characterised in that said distributing device is located outside of said frame.

2. Machine as claimed in claim 1, characterised in that said distributing device comprises dispensing means for dispensing said ice particles from said housing.

3. Machine as claimed in claim 2, characterised in that said dispensing means comprise an agitator located within said housing.

4. Machine as claimed in claim 3, characterised in that said agitator comprises at least one blade, said at least one blade having at least one aperture.

5. Machine as claimed in any of claims 2 to 4, characterised in that said dispensing means

comprise at least one delivery outlet from said housing.

6. Machine as claimed claim 5, characterised in that said housing comprises at least one first duct for drainage of melted ice, said at least one first duct being located lower in said housing than said at least one delivery outlet.

7. Machine as claimed in claim 5 or 6, characterised in that said machine comprises at least one second duct for drainage of melted ice, said at least one second duct being located below said at least one delivery outlet.

8. Machine as claimed in any preceding claim, characterised in that it comprises an electronic control unit for controlling the amount of said ice particles produced or distributed.

9. Machine as claimed in claim 8, characterised in that said electronic control unit is connected to said dispensing means.

10. Machine as claimed in claims 8 or 9, characterised in that said electronic control unit is connected to said refrigerator group evaporator and to said forming means.

11. Machine as claimed in any of claims 8 to 10, characterised in that it comprises first detecting means, connected to said electronic control unit, for detecting the presence of a receiving container below said delivery outlet.

12. Machine as claimed in claim 11, characterised in that said first detecting means comprises at least one sensor.

13. Machine as claimed in claims 11 or 12, characterised in that it comprises means for activating said dispensing means when the signal from said first detecting means is correct.

14. Machine as claimed in claim 13, characterised in that it comprises electronic control means, connected to said control unit, for setting the duration of activation of said dispensing means.

15. Machine as claimed in any of claims 8 to 14, characterised in that it comprises second detecting means, connected to said control unit, for detecting the level of ice in said housing.

16. Machine as claimed in claim 15, characterised in that said detecting means comprises at least one search light.

17. Machine as claimed in claims 15 or 16, characterised in that it comprises means for activating said refrigerator group evaporator and forming means when the signal from said second detecting means is correct.

18. Machine as claimed in any preceding claim, characterised in that said housing is insulated.

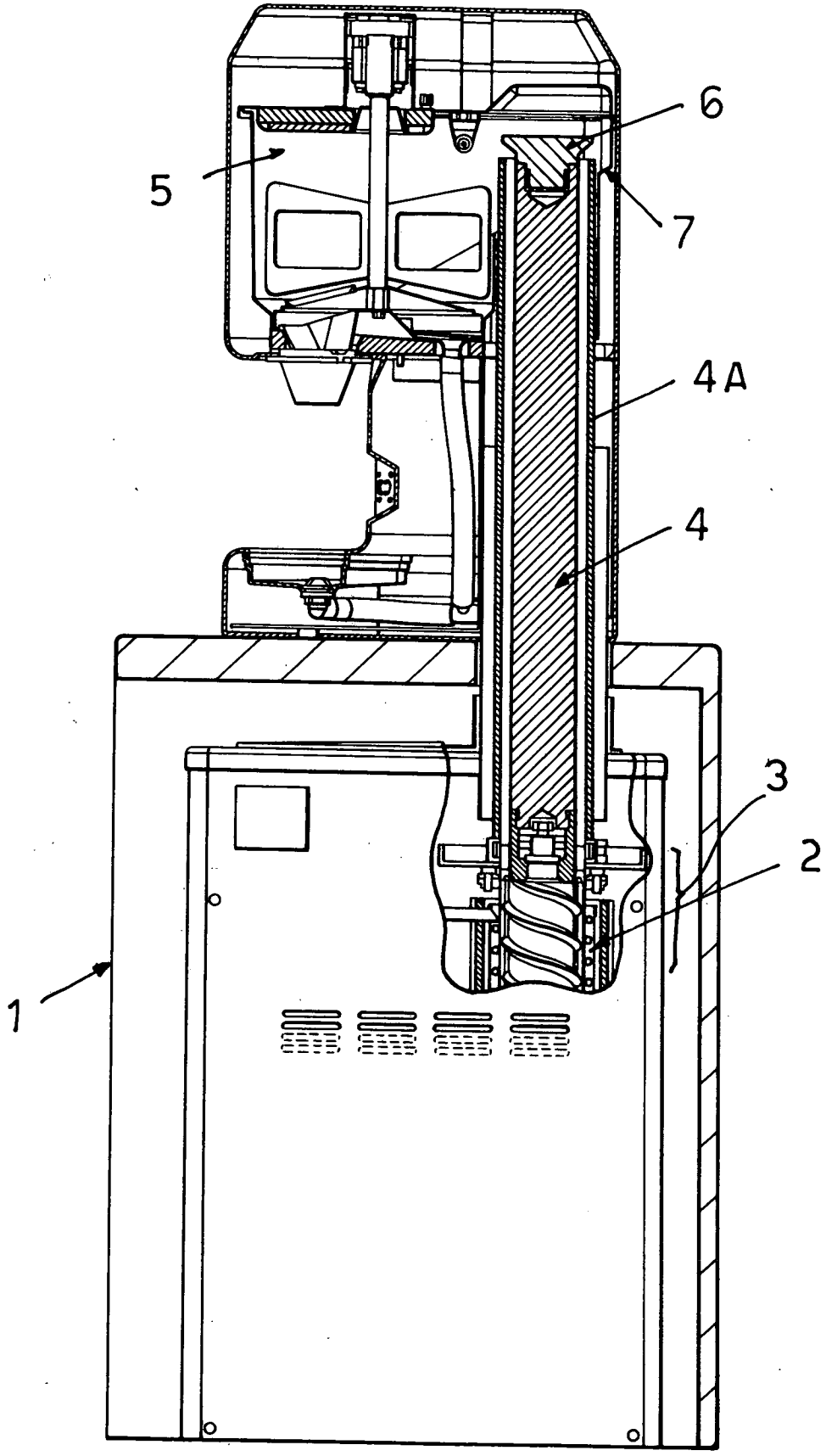

FIG 1

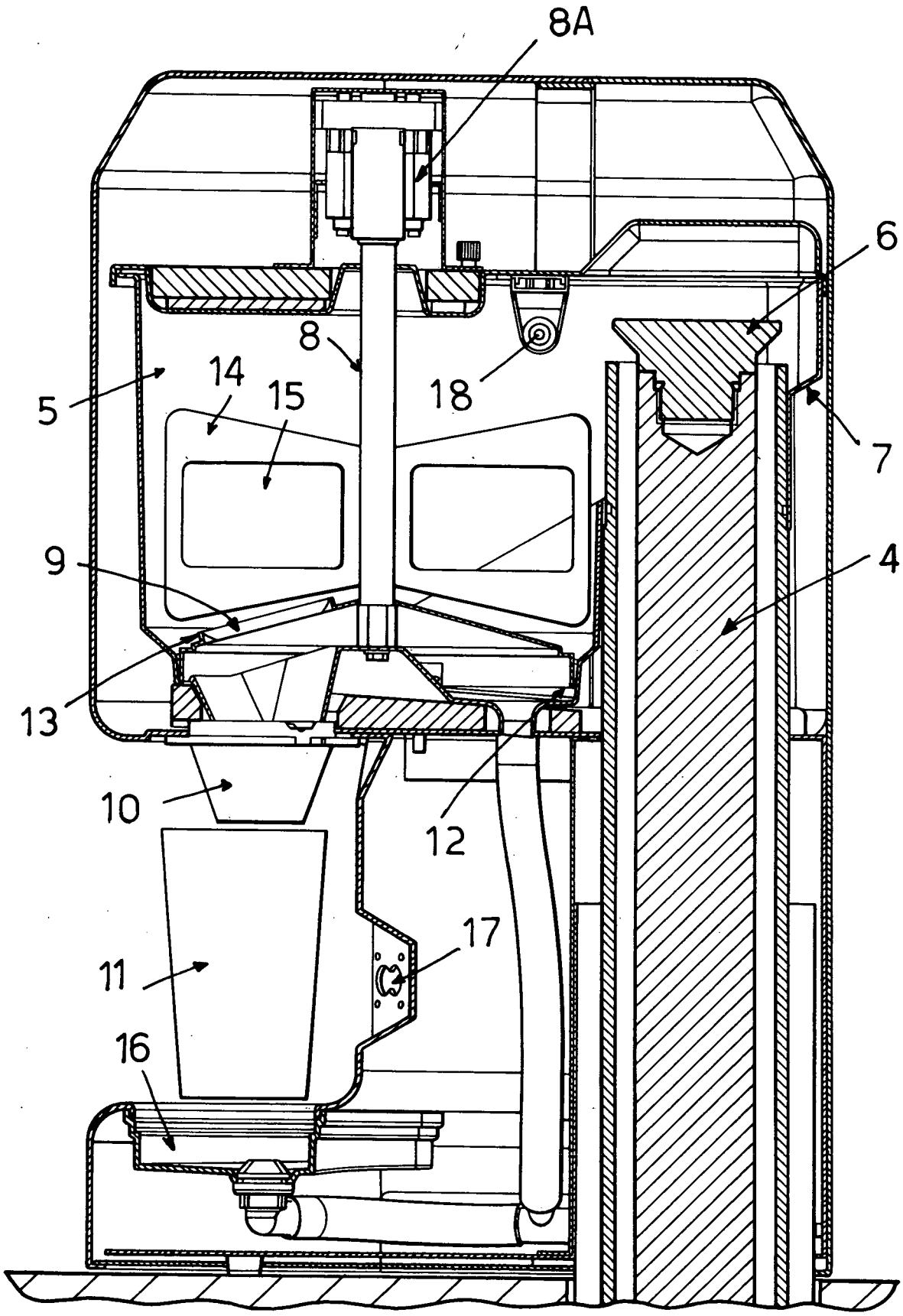

FIG 2