June 14, 1938. F. L. STEPHENS 2,120,514

SAVINGS BANK

Original Filed Nov. 9, 1936

Fig. 1

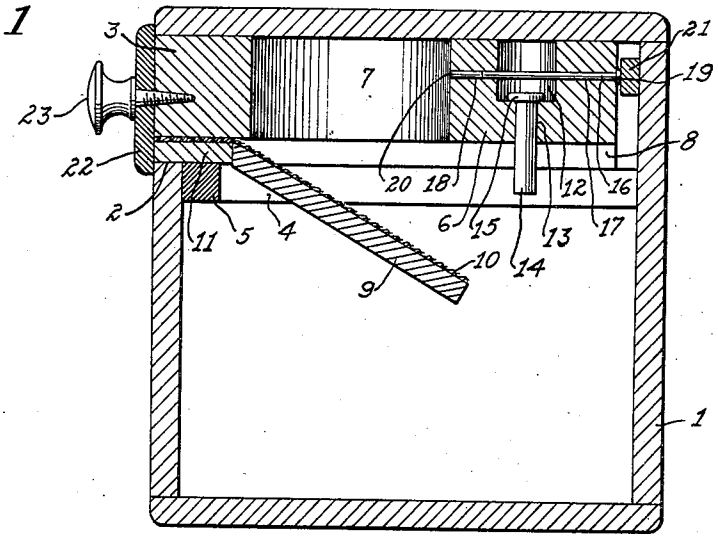

Fig. 2

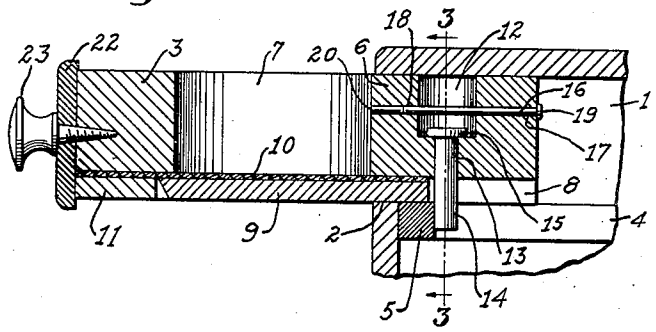

Fig. 4

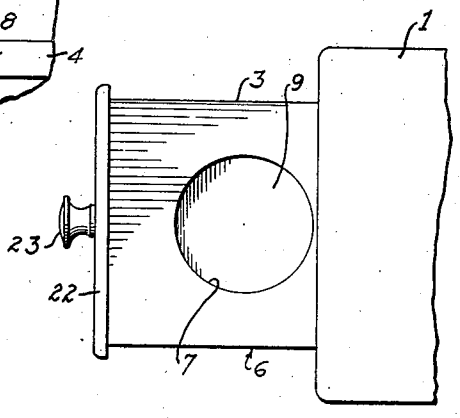

Fig. 3

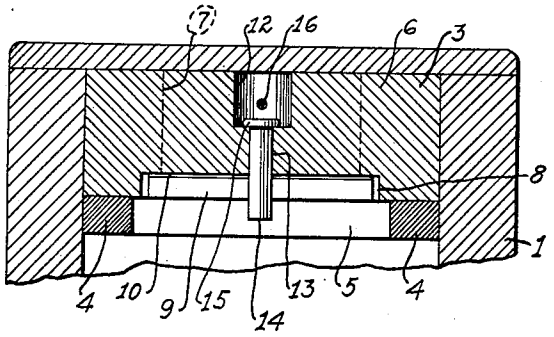

Fig. 5

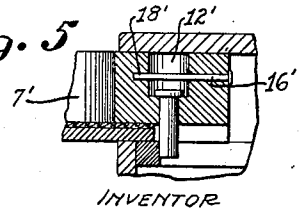

INVENTOR
FREDERICK L. STEPHENS
BY E. M. Harrington
ATTORNEY

Patented June 14, 1938

2,120,514

UNITED STATES PATENT OFFICE

2,120,514

SAVINGS BANK

Frederick L. Stephens, St. Louis, Mo.

Refiled for abandoned application Serial No. 109,910, November 9, 1936. This application August 23, 1937, Serial No. 160,413

2 Claims. (Cl. 232—4)

This invention relates generally to banks and more specifically to small savings banks of the type adapted particularly for the reception of coins, the predominant object of the invention being to provide a bank of this type which is so constructed and arranged that in addition to acting as a savings bank it serves also as a puzzle as to how coins are introduced into the body portion of the bank and how coins may be withdrawn from the body portion of the bank.

Briefly stated the improved bank comprises a body portion in the form of a housing in the upper portion of which a slidably supported drawer is arranged. This drawer is provided with a coin opening which receives coins when the drawer is drawn outwardly, and when the drawer is moved inwardly to its closed position the coins in the coin opening thereof disappear from the drawer in a manner which is rather mysterious to a person who is not familiar with the operation of the bank. Another feature of the invention is the mystery connected with the manner of removing coins from the bank. Coins may be removed from the bank only by first completely removing the drawer from the drawer opening and then discharging the coins from the housing of the bank through the drawer opening. The invention includes means which normally prevents complete withdrawal of the drawer from the drawer opening of the bank housing and the task of determining how the drawer may be removed attaches a puzzle feature to the bank which makes its use more enjoyable.

Fig. 1 is a vertical section of the improved bank.

Fig. 2 is a fragmentary section of the upper portion of the bank with the drawer thereof drawn outwardly.

Fig. 3 is a section on line 3—3 of Fig. 2.

Fig. 4 is a fragmentary plan view on a slightly reduced scale of the structure illustrated in Fig. 2.

Fig. 5 illustrates a modified form of the invention.

In the drawing, wherein are shown for the purpose of illustration, merely, two embodiments of the invention, one designates in Figs. 1 to 4, inclusive, the body portion of the improved bank. The body portion 1 comprises a hollow structure formed by front, back, side, top and bottom wall portions rigidly secured together to provide an enclosed housing. In the front wall of the body portion 1 a drawer opening 2 is provided through which a drawer 3 is adapted to slide, the opposed side walls of the body portion 1 having secured thereto drawer-supporting elements 4 which extend from front to back of said side walls and support the drawer 3 for sliding movement. Secured to the front wall of the body portion 1 is an element 5 which extends transversely of said front wall from the forward portion of one of the drawer-supporting elements 4 to the forward portion of the other drawer-supporting element 4. It is important to note that the drawer opening 2 provides the only means of access to the interior of the body portion 1, said body portion otherwise being completely enclosed by rigidly positioned and nonremoval wall portions.

The drawer 3 includes a block of wood or other suitable material 6 in which is formed a circular coin opening 7, this coin opening being extended entirely through the block of material 6 from top to bottom thereof as shown to the best advantage in Figs. 1 and 2. By referring to Figs. 1, 2 and 3 it will be noted that a depression 8 is formed in the block of material 6 of the drawer at the bottom face thereof. This depression extends from the front end of the block of material to the rear end thereof and said depression is of less width than the block of material as shown in Fig. 3. Disposed in the depression 8 is a hingedly supported flap 9 which provides a bottom for and closes the lower end of the coin opening 7, said flap, as shown in Fig. 3 being slightly wider than the diameter of the coin opening. The flap 9 is hingedly secured to the block of material 3 by a strip of fabric 10, or other suitable material, which is secured by suitable adhesive material to the top face of said flap. The forward portion of the strip of fabric 10 is secured by adhesive material to the lower face of the forward portion of the block of material 3 and this forward portion of the strip of fabric 10 is interposed between the lower face of said block of material and an element 11 which is likewise secured in place by adhesive material. As shown in Figs. 1 and 2 the forward end face of the flap 9 is inclined so as to permit the flap to move in a hinged manner, the hinge point being at the rear end of the element 11.

Adjacent to the rear end of the block of material 6 of the drawer 3 an opening 12 is formed in said block of material, this opening being open at the top face of said block of material and extending partially through the block of material toward the lower face thereof. Also formed in the portion of the block of material 6 located beneath the opening 12 is a second opening 13 of reduced diameter which communicates at its upper end with the larger opening 12 and is open at the lower face of the block of material.

The opening 13 receives a stop pin 14 which is provided with a head portion 15 at its upper end, said head portion resting on the lower face of the opening 12 and thereby supporting the stop pin in the opening 13 so that its lower portion extends downwardly beyond the lower face of the drawer 3.

In order to prevent the stop pin 14 from being unintentionally displaced from the opening 13 a pin 6 is provided which is supported in alined openings 17 and 18 formed in the block of material 6 at opposite sides of the opening 12 thereof. The pin 16, which is provided with a head portion 19 at its rear end, extends transversely through the opening 12 as shown in Figs. 1, 2 and 3 and the forward portion of said pin is disposed only in the rear portion of the opening 18. The forward portion of the opening 18 receives a plug of wood 20 or other suitable material which closes said opening and prevents convenient access to the forward end of the pin 16. Secured to the inner face of the rear wall of the body portion 1 is a buffer element 21 into which the headed end of the pin 16 is moved when the drawer 3 is moved inwardly into said body portion to its closed position.

The forward end of the drawer 3 is provided with a facing element 22 which is suitably secured in place, and also the drawer is provided with a knob 23 which serves to facilitate movement of the drawer into and out of the body portion 1.

In the use of the improved bank disclosed herein, the drawer 3 is drawn outwardly to the position in which it is shown in Fig. 2 when it is desired to introduce a coin into the bank. Such outward movement of the drawer causes the flap 9 to move outwardly in contact with the element 5 whereby said flap is moved upwardly to the position in which it is shown in Fig. 2 where said flap serves as a bottom wall for the coin opening 7 in the drawer. It is to be noted that the flap 9 is maintained in its upward position when the drawer is in its outwardly extended position by the top face of the element 5 and by the face of the front wall of the body portion 1 which is located at the bottom of the drawer opening 2. It is also to be noted that when the drawer has been fully drawn outwardly to its open position the stop pin 14 contacts with the element 5 to prevent said drawer from being entirely withdrawn from the body portion 1.

With the drawer 3 in the outwardly extended position as shown in Fig. 2, the coin to be deposited in the bank is placed in the coin opening where it rests on the flap 9. The drawer is then moved inwardly and as the flap moves inwardly of the element 5 which supports said flap in a horizontal position when the drawer is extended outwardly, the rear portion of the flap moves downwardly until it finally reaches the position in which it is shown in Fig. 1. Such downward movement of the flap causes the coin to drop into the interior of the body portion 1 of the bank.

It is pointed out that the manner in which the coins find their way from the coin opening of the drawer into the body portion 1 of the bank constitutes a mystery which makes the use of the bank more enjoyable as the movement of the flap takes place entirely within the body portion of the bank where it cannot be seen. All that the uninformed user of the bank knows is that he placed a coin in the drawer which apparently has a solid bottom and that when he has moved the drawer inwardly and has again drawn the drawer outwardly to its open position the coin has disappeared.

Another mystery in connection with the use of the bank has to do with the manner in which coins may be removed from the interior of the body portion of the bank. The body portion of the bank is made up of solid, rigidly positioned, and nonremovable walls and therefore the only manner in which coins may be removed from the bank is through the drawer opening 2. However, the drawer is disposed in the drawer opening and the stop pin 14 normally prevents removal of the drawer from the drawer opening. The solution of this mystery is that the pin 16 must be moved rearwardly so that it no longer bridges the opening 12. On such displacement of the pin 16 from the opening 12 the bank may be turned upside down so as to cause the stop pin 14 to move into the opening 12. This brings the stop pin to a position where it will clear the element 5 and permit the drawer to be withdrawn from the drawer opening.

When it is desired to displace the pin 16 from the position where it bridges the opening 12 so as to permit movement of the stop pin 14 to a position where it will not interfere with withdrawal of the drawer from the drawer opening, a short wire-like tool of proper diameter (not shown) is pushed against the forward end of the plug 20. This forces the plug 20 and the pin 16 rearwardly, the drawer at this time being in its forwardly extended position as shown in Fig. 2. Such rearward movement of the plug 20 and the pin 16 will cause the plug to drop in the opening 12 and the pin to be entirely removed rearwardly from the opening 12. The bank may then be turned upside down so that the stop pin may move into the opening 12 and thereby permit withdrawal of the drawer from the drawer opening as described above.

When it is desired to replace the drawer in the drawer opening after coins have been withdrawn from the bank, the bank is arranged upright in its normal position and the pin 16 is arranged so that its forward portion is disposed in the opening 17 and its rear portion extends rearwardly beyond the rear end of the drawer. The stop pin 14 and the flap 9 are then held in their upward positions by fingers of the person replacing the drawer so that the drawer may be passed into the drawer opening without interference from these parts. When the stop pin and the rear end portion of the flap are located within the drawer opening the drawer is moved inwardly until the rear headed end of the pin 16 contacts with the buffer 21 and continued rearward movement of the drawer will force the pin forwardly through the opening 12 and into the rear portion of the opening 18 as shown in Figs. 1 and 2. A new plug 20 is then arranged in the forward portion of the opening 18 to conceal said opening and the bank is again ready for use. It is important that the outer end of the plug 20 appear as much like the surface of the wall of the coin opening 7 as possible so that the presence of this plug may not be detected by a person who is not familiar with the construction of the bank. However a person familiar with the operation of the bank would know the location of the plug and therefore would have no trouble in applying the tool thereto for the purpose of displacing the plug and the pin 16 as heretofore described.

The form of the invention shown in Fig. 5 is the same as that shown in the other views with

the exception that the opening 18' does not extend forwardly to the face of the coin opening 7', and this form of the invention does not include a plug such as the plug 20. In the use of this form of the invention an authorized person, for instance, a teller in a bank which issues the improved savings banks disclosed herein, would be provided with a small drill similar to a dentist's drill. When this person desired to remove coins from the savings bank he would drill a small hole through from the face of the wall of the coin opening which would be an alined forward continuation of the opening 18' whereupon he would displace the pin 16' from the opening 12' as already explained thereby permitting displacement of the stop pin and removal of the drawer.

The present application is a substitution for abandoned application Serial No. 109,910, filed in my name on November 9, 1936.

I claim:

1. A savings bank comprising a housing providing a receptacle for coins, a drawer arranged for sliding movement in said housing, said drawer having a coin opening formed therein for the reception of coins, and means associated with said drawer for preventing complete withdrawal of the drawer from the housing, said means including a displaceable stop pin supported in a vertically disposed opening formed in said drawer and adapted to engage a portion of the housing for preventing complete withdrawal of the drawer from the housing, and a displaceable pin extended transversely of said opening for preventing displacement of said stop pin, said displaceable pin being so located and positioned at such distance from an end of said stop pin when the stop pin is in its normal position that on movement of said stop pin longitudinally of the opening in which it is located to a predetermined extent said end of said stop pin will contact with said displaceable pin so as to stop the movement of the stop pin before it has been entirely displaced from its opening.

2. A savings bank comprising a housing providing a receptacle for coins, a drawer arranged for sliding movement in said housing, said drawer having a coin opening formed therein for the reception of coins, and means associated with said drawer for preventing complete withdrawal of the drawer from the housing, said means including a displaceable stop pin supported in a vertically disposed opening formed in said drawer and adapted to engage a portion of the housing for preventing complete withdrawal of the drawer from the housing, and a displaceable pin supported in alined openings at opposite sides of said opening and extended transversely of said opening for preventing displacement of said stop pin, said displaceable pin being so located and positioned at such distance from an end of said stop pin when the stop pin is in its normal position that on movement of said stop pin longitudinally of the opening in which it is located to a predetermined extent said end of said stop pin will contact with said displaceable pin so as to stop the movement of the stop pin before it has been entirely displaced from its opening, and means for concealing the location of said displaceable pin.

FREDERICK L. STEPHENS.