(19) Europäisches Patentamt
European Patent Office
Office européen des brevets

(11) EP 1 054 149 A2

(12) EUROPEAN PATENT APPLICATION

(43) Date of publication:
22.11.2000 Bulletin 2000/47

(51) Int. Cl.^{7}: **F02D 41/14**, F02D 41/02

(21) Application number: **00110504.8**

(22) Date of filing: **17.05.2000**

(84) Designated Contracting States:
AT BE CH CY DE DK ES FI FR GB GR IE IT LI LU MC NL PT SE
Designated Extension States:
AL LT LV MK RO SI

(30) Priority: **18.05.1999 JP 13748699**

(71) Applicant:
TOYOTA JIDOSHA KABUSHIKI KAISHA
Aichi-ken 471-8571 (JP)

(72) Inventor: **Mizuno, Hiroyuki**
Toyota-shi, Aichi-ken 471-8571 (JP)

(74) Representative:
Leson, Thomas Johannes Alois, Dipl.-Ing.
Patentanwälte
Tiedtke-Bühling-Kinne & Partner,
Bavariaring 4
80336 München (DE)

(54) Controller of internal combustion engine

(57) An internal combustion engine has a reduction occlusion type NOx catalyst located in an exhaust passage for adsorbing NOx. A controller of the engine temporarily discontinues a lean combustion mode when a predetermined condition is satisfied during the lean combustion mode. When the amount of NOx adsorbed in the catalyst is greater than an acceptable value, the controller executes a rich-spike control procedure to reduce NOx adsorbed in the catalyst by temporarily switching the combustion mode of the engine to a rich combustion mode. The controller determines whether the amount of NOx adsorbed in the catalyst is greater than a predetermined determination value, which is smaller than the acceptable value, when lean combustion is discontinued. When the amount of NOx adsorbed in the catalyst is determined to be greater than the determination value, the controller executes rich-spike control procedure.

Fig.2

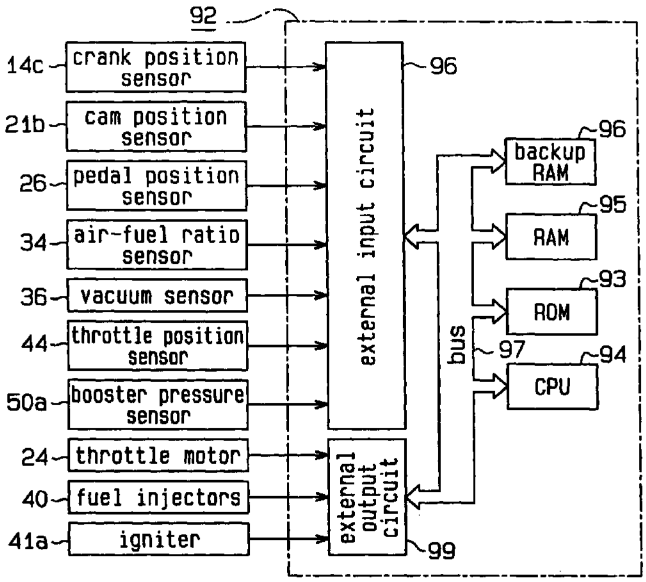

Printed by Xerox (UK) Business Services
2.16.7 (HRS)/3.6

Description

[0001] The present invention relates to a controller of an internal combustion engine that burns an air-fuel mixture, the air-fuel ratio of which is leaner than a stoichiometric air-fuel ratio.

[0002] To improve fuel economy, engines that burn air-fuel mixture, the air-fuel ratio of which is leaner than a stoichiometric air-fuel ratio, that is, engines that perform lean combustion, are known. In such engines, it is difficult to decrease the nitrogen oxide (NOx) in the exhaust gas by a normal three-way catalyst during lean combustion. Thus, an occlusion reduction type NOx catalyst is located in the exhaust passage. An engine having such an NOx catalyst is disclosed in, for example, Japanese Unexamined Patent Publication No. 7-332071.

[0003] In the engine of the publication, NOx in the exhaust gas is adsorbed by an NOx catalyst during lean combustion, which decreases the amount of NOx discharged with the exhaust gas. The engine performs rich-spike control procedure at selected times. In rich-spike control procedure, air-fuel mixture is temporarily enriched such that its air-fuel ratio is richer than a stoichiometric air-fuel ratio and is then burned (rich combustion). Rich combustion reduces the NOx adsorbed in the catalyst to nitrogen (N_2) by hydrogen dioxide (HC) in the exhaust gas, which prevents the catalyst from being saturated with NOx.

[0004] In some lean combustion engines, lean combustion is temporarily stopped and stoichiometric combustion, or combustion with a stoichiometric air-fuel ratio, is started when predetermined conditions are satisfied. Specifically, engines having a negative pressure actuated device perform such a control. A negative pressure actuated device is actuated by the negative pressure generated in the intake system of engines. A typical negative pressure actuated device is a brake booster, which reduces the power required for operating a brake pedal.

[0005] A brake booster accumulates negative pressure generated in the intake passage of the engine and is actuated by the accumulated negative pressure. During lean combustion, the opening size of the engine throttle valve is relatively large to make the air-fuel ratio of the mixture leaner than the stoichiometric air-fuel ratio. This brings the negative pressure in the intake passage close to atmospheric pressure. It is therefore difficult to obtain negative pressure low enough to actuate the negative pressure actuated device.

[0006] Thus, when negative pressure in the intake passage is not low enough to actuate the negative pressure actuated device, lean combustion is temporarily stopped and stoichiometric combustion is started, and the opening size of the throttle valve is decreased. This control is performed by, for example, the apparatus disclosed in Japanese Unexamined Patent Publication 10-175464. When the negative pressure is not low enough, the apparatus of the publication No. 10-175464 temporarily performs stoichiometric combustion to generate a negative pressure low enough to actuate the vacuum actuated device (brake booster).

[0007] Rich-spike control procedure is executed independently of the discontinuation of lean combustion for generating negative pressure. That is, rich-spike control procedure is executed when a relatively high amount of NOx is adsorbed in the occlusion reduction type NOx catalyst, or when the amount of NOx adsorbed in the catalyst is greater than a limit value. Therefore, when rich-spike control procedure is started, the combustion mode is switched from lean combustion to rich combustion. At the same time, the adsorbed NOx is reduced and the combustion mode is returned from rich combustion to lean combustion. Such switching of the combustion modes causes the engine to consume fuel that does not contribute to the reduction of NOx.

[0008] Accordingly, it is an objective of the present invention to provide a controller for internal combustion engines that, when reducing NOx adsorbed in a reduction occlusion type NOx catalyst, reduces wasteful fuel consumption due to switching of combustion modes, thereby efficiently executing rich combustion.

[0009] To achieve the foregoing and other objectives and in accordance with the purpose of the present invention, a controller for an internal combustion engine is provided. The engine has a reduction occlusion type NOx catalyst located in an exhaust passage for adsorbing NOx. A controller of the engine temporarily discontinues a lean combustion mode when a predetermined condition is satisfied during the lean combustion mode. When the amount of NOx adsorbed in the catalyst is greater than an acceptable value, the controller executes a rich-spike control procedure to reduce NOx adsorbed in the catalyst by temporarily switching the combustion mode of the engine to a rich combustion mode. The controller includes determination means and combustion mopde switching means. The determination means determines whether the amount of NOx adsorbed in the catalyst is greater than a predetermined determination value, which is smaller than the acceptable value, when the lean combustion mode is discontinued. The combustion mode switching means executes rich-spike control procedure when the determination means determines that the amount of NOx adsorbed in the catalyst is greater than the determination value.

[0010] The present invention may also be embodied as a method for controlling an internal combustion engine. The engine has a reduction occlusion type NOx catalyst located in an exhaust passage for adsorbing NOx. When the amount of NOx adsorbed in the catalyst is greater than an acceptable value, the controller temporarily discontinues a lean combustion mode to reduce the NOx adsorbed in the catalyst and executes a rich-spike control procedure for temporarily switching the combustion mode of the engine to a rich combustion mode. The method includes: determining whether the amount of NOx adsorbed in the catalyst is greater than a predetermined determination value, which is smaller than the acceptable value, when the lean combustion mode is discontinued; and executing the rich-spike control procedure when it is determined that the amount of NOx adsorbed in the catalyst is greater than the determination value in the determining step.

[0011] Other aspects and advantages of the invention will become apparent from the following description, taken in conjunction with the accompanying drawings, illustrating by way of example the principles of the invention.

[0012] The invention, together with objects and advantages thereof, may best be understood by reference to the following description of the presently preferred embodiments together with the accompanying drawings.

Fig. 1 is a schematic, cross-sectional view illustrating an engine controlled by a controller according to a first embodiment of the present invention;

Fig. 2 is a block diagram, showing the controller of Fig. 1;

Fig. 3 is a flowchart showing a routine for setting a vacuum production procedure execution flag;

Fig. 4 is a flowchart showing a routine for setting a rich-spike control procedure execution flag;

Figs. 5(a) to 5(c) are timing charts showing changes of a rich-spike control procedure execution flag XR, an air-fuel ratio A/F and a NOx counter value Cnox during rich-spike control procedure;

Fig. 6 is a graph showing the amount of fuel needed for decreasing the NOx counter value Cnox to zero;

Figs. 7(a) to 7(d) are time charts showing changes of a combustion mode value MODE, the NOx counter value Cnox, a vacuum production procedure execution flag XB and the flag XR during the vacuum production procedure according to the first embodiment;

Fig. 8 is a flowchart showing a routine for switching the mode value MODE in the first embodiment;

Fig. 9 is a flowchart showing a routine for switching the mode value MODE in the first embodiment, which is executed after the operation for producing a sufficient value of the negative pressure PBK is completed;

Fig. 10 is a flowchart showing a routine for switching the mode value MODE according to a second embodiment;

Fig. 11 is a flowchart showing a routine for switching the mode value MODE in the second embodiment, which is executed when the operation for producing a sufficient value of the negative pressure PBK is started;

Fig. 12 is a time charts showing changes of the mode value MODE, the NOx counter value Cnox, the flag XB and the flag XR when the vacuum production procedure is executed in the second embodiment;

Fig. 13 is a flowchart showing a routine for switching a combustion mode value MODE according to a third embodiment;

Fig. 14 is a flowchart showing a routine for switching the mode value MODE in the third embodiment, which is executed when the operation for producing a sufficient value of the negative pressure PBK is started;

Fig. 15 is a flowchart showing a routine for switching the mode value MODE in the third embodiment, which is executed after the operation for producing a sufficient value of the negative pressure PBK is completed;

Figs. 16(a) to 16(d) are time charts showing changes of combustion mode value MODE, the NOx counter value Cnox, the flag XB and the flag XR during the vacuum production procedure according to the third embodiment; and

Figs. 17(a) to 17(d) are time charts showing changes of combustion mode value MODE, the NOx counter value Cnox, the flag XB and the flag XR during the vacuum production procedure according to the third embodiment.

[0013] A first embodiment of the present invention will now be described with reference to Figs. 1 to 9. In the first embodiment, the invention is embodied in an inline four-cylinder type gasoline engine 11 for vehicles.

[0014] As shown in Fig. 1, the engine 11 includes four pistons 12 (only one is shown in Fig. 1). The pistons 12 are accommodated in a cylinder block 11a. Each piston 12 is connected to a crankshaft 14 by a connecting rod 13. The connecting rods 13 convert reciprocation of the pistons 12 into rotation of the crankshaft 14. A recess 12a is formed in the head of each piston 12. The recesses 12a are used when stratified combustion, which will be described later, is performed.

[0015] A signal rotor 14a is coupled to the crankshaft 14. The signal rotor 14a has teeth 14b. The teeth 14b are arranged along a circle centered on the axis of the crankshaft 14 and are spaced from one another by equal angular intervals. A crank position sensor 14c is located in the vicinity of the signal rotor 14a. When the crankshaft 14 is rotated, the teeth 14b of the signal rotor 14a pass by the crank position sensor 14c. The sensor 14c outputs pulse signals, each of which corresponds to one of the teeth 14b.

[0016] A cylinder head 15 is arranged on top of the cylinder block 11a. A combustion chamber 16 is defined between each piston 12 and the cylinder head 15. The cylinder head 15 has intake ports 17 and exhaust ports 18. Each intake port 17 and each exhaust port 18 communicates with one of the combustion chambers 16.

[0017] As shown in Fig. 1, the cylinder head 15 supports an intake camshaft 21, an exhaust camshaft 22, intake valves 19 and exhaust valves 20. The camshafts 21, 22 are coupled to the crankshaft 14 by a timing belt and gears (neither is shown). The belt and the gears transmit rotation of the crankshaft 14 to the camshafts 21, 22. Rotation of the intake camshaft 21 reciprocates the intake valves 19, which connect and disconnect each combustion chamber 16 with the corresponding intake port 17. Rotation of the exhaust camshaft 22 reciprocates the exhaust valves 20, which connect and disconnect each combustion chamber 16 with the corresponding exhaust port 18.

[0018] A cam position sensor 21b is located in the vicinity of the intake camshaft 21. The cam position sensor 21b detects projections 21a formed on the camshaft 21 and outputs detection signals accordingly. When the intake camshaft 21 rotates, the projections 21a pass by the cam position sensor 21b. The cam position sensor 21b outputs a detection signal as each projection 21a passes by the sensor 21b.

[0019] The intake ports 17 are connected to an intake manifold 30. The exhaust ports 18 are connected to an exhaust manifold 31. The intake manifold 30 and the intake ports 17 form an intake passage 32. The exhaust manifold 31 and the exhaust ports 18 form an exhaust passage 33.

[0020] Catalytic converters 33a, 33b and an air-fuel ratio sensor 34 are located in the exhaust passage 33. The catalytic converters 33a, 33b clean exhaust gas from the engine 11. The air-fuel ratio sensor 34 detects oxygen contained in the exhaust gas and outputs a detection signal corresponding the oxygen concentration. A throttle valve 23 is located in the upstream portion of the intake passage 32. The throttle valve 23 is coupled to a throttle DC motor 24, which adjusts the opening of the throttle valve 23. The opening size of the throttle valve 23 is detected by a throttle position sensor 44.

[0021] An acceleration pedal 25 is located in the passenger compartment. The throttle motor 24 is controlled based on the depression amount of the acceleration pedal 25. Specifically, when the driver depresses the acceleration pedal 25, the depression amount of the acceleration pedal 25 is detected by a pedal position sensor 26. The motor 24 is actuated in accordance with detection signal of the sensor 26. Accordingly, the cross-sectional area of the intake passage 32 is varied, which varies the amount of air introduced into each combustion chamber 16.

[0022] A vacuum sensor 36 is located at the downstream side of the throttle valve 23 in the intake passage 32. The vacuum sensor 36 detects the pressure in the passage 32 and outputs a detection signal corresponding to the detected pressure.

[0023] A brake booster 50 is also connected to the intake passage by a vacuum line 49 at a location downstream of the throttle valve 23. The brake booster 50 reduces the power required for operating a brake pedal 51 and is actuated by negative pressure generated in the intake passage 32 while the engine 11 is running. Specifically, the negative pressure in the intake passage 32 draws air from the brake booster 50 through the vacuum line 49, which generates a negative pressure PBK in the brake booster 50. The brake booster 50 is actuated based on the negative pressure PBK, which is detected by a booster pressure sensor 50a.

[0024] As shown in Fig. 1, the cylinder head 15 includes fuel injectors 40 and spark plugs 41. Each fuel injector 40 corresponds to and supplies fuel to one of the combustion chambers 16. Each spark plug 41 ignites an air-fuel mixture in the corresponding combustion chamber 16. The ignition timing of each spark plug 41 is adjusted by an igniter 41a, which is located above the spark plug 41.

[0025] Fuel injected from each injector 40 into the corresponding combustion chamber 16 is mixed with air drawn into the combustion chamber 16 through the intake passage 32, which forms an air-fuel mixture in the combustion chamber 16. The mixture is then ignited by the corresponding spark plug 41. Thereafter, the resulting products of combustion are discharged to the exhaust passage 33. The exhaust gas is then cleaned by the first and second catalytic converters 33a, 33b.

[0026] The second catalytic converter 33b is a nitrogen oxide occlusion reduction type to remove nitrogen oxide (NOx) from exhaust gas. When combustion of an air-fuel mixture that is leaner than the stoichiometric air-fuel mixture is being performed, it is difficult to remove NOx from the exhaust gas. Thus, the catalytic converter 33b temporarily adsorbs NOx in the exhaust gas when combustion of a lean mixture is being performed. When the combustion of an air-fuel mixture that is richer than the stoichiometric air-fuel mixture is being performed, the second converter 33b reduces the adsorbed NOx to nitrogen (N_2) by, for example, hydrocarbon (HC) in exhaust gas.

[0027] The electric construction of the engine 11 will now be described with reference to Fig. 2.

[0028] The controller includes an electronic control unit (ECU) 92. The ECU 92 controls the running conditions of the engine 11. Specifically, the ECU 92 controls the fuel injection amount, the injection timing and the ignition timing and throttle opening. The ECU 92 is a logic circuit including a ROM 93, a CPU 94, a RAM 95 and a backup RAM 96.

[0029] The ROM 93 stores various control programs and maps used in the programs. The CPU 94 executes various computations based on the programs and the maps stored in the ROM 93. The RAM 95 temporarily stores the result of the computations and data from various sensors. The backup RAM 96 is a non-volatile memory that stores necessary data when the engine 11 is stopped. The ROM 93, the CPU 94, the RAM 95 and the backup RAM 96 are connected to one another by a bus 97. The bus 97 also connects the ROM 93, the CPU 94, the RAM 95 and the backup RAM 96 to an external input circuit 98 and an external output circuit 99.

[0030] The external input circuit 98 is connected to the crank position sensor 14c, the cam position sensor 21b, the pedal position sensor 26, the air-fuel ratio sensor 34, the vacuum sensor 36, the throttle position sensor 44 and the booster pressure sensor 50a. The external output circuit 99 is connected to the throttle motor 24, the fuel injectors 40 and the igniters 41a.

[0031] The ECU 92 computes the engine speed NE based on detection signals form the crank position sensor 14c. The ECU 92 also computes the acceleration pedal depression amount ACCP and the intake pressure PM based on detection signals from the pedal position sensor 26 and the vacuum sensor 36. Further, the ECU 92 computes a basic fuel injection amount Qbse, which represents the engine load, based on the depression amount ACCP or on the intake pressure PM. The ECU 92 sets a combustion mode value MODE based on the engine speed NE and the basic fuel injection amount Qbse. The mode value MODE is used to switch the combustion mode of the engine 11. The mode value MODE is set, for example, to zero for lean combustion and to one for stoichiometric combustion.

[0032] When the engine 11 is running at a relatively high speed with a relatively great load, the ECU 92 sets the mode value MODE to one. Accordingly, the ECU 92 initiates stoichiometric combustion, in which the air-fuel mixture is burned at the stoichiometric air-fuel ratio. When the engine 11 is running at a relatively low speed with a relatively small load, the ECU 92 sets the mode value MODE to zero. Accordingly, the ECU 92 initiates lean combustion, in which the air-fuel mixture has an air-fuel ratio that is leaner than the stoichiometric air-fuel ratio. Specifically, when the engine 11 is running at a relatively high speed with a relatively great load, the power of the engine 11 needs to be increased. In this state, the ECU 92 controls the engine 11 to perform stoichiometric combustion, which increases the power. When the engine 11 is running at a relatively low speed with a relatively small load, the power of the engine 11 does not need be increased. In this state, the ECU 92 controls the engine 11 to perform lean combustion to make the air-fuel mixture leaner, which improves the fuel economy.

[0033] The control of stoichiometric combustion and lean combustion will now be described.

(a) Stoichiometric combustion

[0034] When the mode value MODE is one (stoichiometric combustion), the ECU 92 computes the basic injection amount Qbse based on the intake pressure PM and the engine speed NE. The basic injection amount Qbse increases as the engine speed NE is increased and as the intake pressure PM NE is increased. The ECU 92 then computes a final fuel injection amount Qfin based on the basic fuel injection amount Qbse. The ECU 92 controls the fuel injectors 40 to inject fuel, the amount of which corresponds to the final injection amount Qfin, during the intake stroke of each piston 12. The ECU 92 also feedback controls the fuel injection amount based on the air-fuel ratio such that the air-fuel ratio of the mixture matches the stoichiometric air-fuel ratio.

[0035] The ECU 92 detects the actual opening size of the throttle based on detection signals from the throttle position sensor 44 and computes a target throttle opening size based on the acceleration pedal depression amount ACCP. The ECU 92 controls the throttle motor 24 such that the actual throttle opening size approaches the target throttle opening size. Further, the ECU 92 computes target ignition timing based on the intake pressure PM and the engine speed NE and actuates the igniter 41a accordingly. In this manner, the throttle opening size and the ignition timing are optimized for stoichiometric combustion.

(b) Lean combustion

[0036] When the mode value MODE is zero (lean combustion), the ECU computes the basic fuel injection amount Qbse based on the acceleration pedal depression amount ACCP and the engine speed NE. The engine speed NE increases as the depression amount ACCP increases. Accordingly, the basic fuel injection amount Qbse is increased as the engine speed NE increases. The ECU 92 then computes a final fuel injection amount Qfin based on the basic fuel injection amount Qbse and controls the fuel injectors 40 to inject fuel, the amount of which corresponds to the final injection amount Qfin. The air-fuel ratio of the mixture in each combustion chamber 16 is leaner than the stoichiometric air-fuel ratio.

[0037] In lean combustion, the mixture is leaner than a stoichiometric mixture. Lean combustion includes the following types.

Homogeneous lean combustion

[0038] Fuel is injected during the intake stroke of the engine 11 to make the mixture leaner than a stoichiometric mixture (for example, the air-fuel ratio of fifteen to twenty three). Swirl in the combustion chamber 16 stabilizes the combustion of the lean mixture.

Stratified combustion

[0039] Fuel is injected during the compression stroke of the engine 11 and is concentrated about the spark plug by the recess 12a of each piston 12. The overall air-fuel ratio is adjusted to be greater than that of homogeneous lean combustion. However, the concentration of the mixture about the plug 41 improves the ignition.

Semi-stratified combustion

[0040] Semi-stratified combustion refers to a combustion mode that is between homogeneous lean combustion and stratified combustion. Fuel is injected both in the intake stroke and in the compression stroke of the engine 11.

[0041] In these lean combustion modes, the ECU 92 controls the throttle motor 24 such that the actual throttle opening size approaches the target throttle opening size, which is computed based on the acceleration pedal depression amount ACCP. Further, the ECU 92 computes a target ignition timing based on the acceleration pedal depression amount ACCP and the engine speed NE and actuates the igniter 41a according to the computed target ignition timing. In this manner, the throttle opening and the ignition timing are optimized for lean combustion.

[0042] In lean combustion, the throttle valve 23 is opened wider than in stoichiometric combustion to make the overall air fuel ratio of the mixture greater than the stoichiometric air fuel ratio. Thus, lean combustion decreases the pumping loss of the engine, which improves the fuel economy.

[0043] However, since, during lean combustion, the throttle valve 23 is opened wider than in stoichiometric combustion, the negative pressure generated in the intake passage 32 is close to atmospheric pressure. Accordingly, the negative pressure PBK for actuating the brake booster 50 is also near atmospheric pressure. As a result, the negative pressure PBK may be insufficient for actuating the brake booster 50. The ECU 92 sets the value of a vacuum production procedure execution flag XB based on the negative pressure PBK, which is computed based on signals from the booster pressure sensor 50a. In accordance with the value of the flag XB, the ECU 92 executes a vacuum production procedure for obtaining a required value of the negative pressure PBK. During the vacuum production procedure, the ECU 92 temporarily executes stoichiometric combustion to decrease the opening size of the throttle valve 23 even during lean combustion.

[0044] A procedure for determining the value of the flag XB will now be described with reference to Fig 3. The flag XB is used for determining whether the vacuum production procedure needs to be executed. Specifically, Fig. 3 is a flowchart showing a routine for setting the flag XB either to one or to zero. The value one of the flag XB indicates that the vacuum production procedure needs to be executed, while the value zero of the flag XB indicates that the procedure need not be executed. This routine is an interrupt executed by the ECU 92 at predetermined time intervals.

[0045] In step S101 of Fig. 3, the ECU 92 judges whether the negative pressure PBK is low enough to actuate the brake booster 50. In other words, the ECU 92 judges whether the negative pressure PBK is insufficient. If the negative pressure PBK is insufficient, the ECU 92 moves to step S102 to set the flag XB to one and stores the value of the flag XB in a predetermined area in the RAM 95. Thereafter, the ECU 92 temporarily suspends the routine. If the pressure PBK is not insufficient, the ECU 92 moves to step S103 and sets the value of the flag XB to zero and stores the value of the flag XB in the predetermined area of the RAM 95. Thereafter, the ECU 92 temporarily suspends the current routine.

[0046] The ECU 92 executes the vacuum production procedure in accordance with the value of the flag XB for obtaining a required level of the negative pressure PBK. That is, when the flag XB is one due to an insufficiency in the level of the negative pressure PBK, the ECU 92 sets the mode value MODE to one to switch to stoichiometric combustion, even if lean combustion is being performed. This decreases the opening size of the throttle valve 23 relative to that during lean combustion. As a result, the pressure in the intake passage 32 falls. Accordingly, the negative pressure PER becomes sufficient (low enough) for actuating the brake booster 50. Once the negative pressure PBK is low enough, the ECU 92 returns the combustion mode to the previous mode (in this case, to lean combustion)

[0047] During lean combustion, it is difficult to produce sufficient negative pressure PBK. Also, lean combustion increases the amount of NOx that is adsorbed by the second catalytic converter 33b, which is a reduction occlusion type NOx catalyst. To prevent the second catalytic converter 33b from being saturated by NOx, rich-spike control procedure is executed at certain times during lean combustion. In rich-spike control procedure, rich combustion is temporarily executed. That is, the air-fuel ratio of the mixture is temporarily decreased to be less than stoichiometric. Rich-spike control procedure is performed when the ECU 92 sets the mode value MODE to two (rich combustion).

[0048] That is, when the amount of NOx adsorbed in the second catalytic converter 33b is greater than an acceptable level, the ECU 92 sets a rich-spike control procedure execution flag XR to one. The flag XR is used for determining whether to execute rich-spike control procedure. When the value of the flag XR is one, the ECU 92 sets the mode value MODE to two for executing rich-spike control procedure.

[0049] During rich-spike control procedure, the amount of injected fuel is greater than that of stoichiometric combustion. Combustion of a mixture having a relatively rich air-fuel ratio reduces the NOx adsorbed in the second catalytic converter 33b to N_2 by HC in the exhaust gas of the engine 11. This prevents the catalytic converter 33b from being saturated with NOx. After the reduction of NOx, the ECU 92 sets the flag XR to zero. In accordance with the value of the flag XR, the ECU 92 switches the combustion to the previous mode, which, in this case, is lean combustion, and temporarily terminates rich-spike control procedure.

[0050] The procedure for determining the value of the flag XR will now be described with reference to Fig 4. The flag XR is used for determining whether to execute rich-spike control procedure. Fig. 4 is a flowchart showing a routine for determining the value of the flag XR. The value one of the flag XR indicates that rich-spike control procedure needs to be executed, while the value zero of the flag XR indicates that rich-spike control procedure need not be executed. This routine is performed in an interrupting manner by the ECU 92 at predetermined crank angle intervals.

[0051] In step S201 of Fig. 4, the ECU 92 judges whether the mode value MODE is zero (lean combustion). If the mode value MODE is zero, the ECU 92 executes steps S202 to S206. If the mode value MODE is not zero, the ECU 92 executes steps S207 to S210.

[0052] In steps S202 to S206, a NOx counter value Cnox, which represents the amount of NOx adsorbed in the second catalytic converter 33b, is increased. Also, the flag XR is set to one in accordance with the increased value of the NOx counter value Cnox. In steps S207 to S210, the NOx counter value Cnox is decreased, and rich-spike control procedure flag XR is set to zero in accordance with the decreased NOx counter value Cnox.

[0053] If the mode value MODE is zero in step S201, or if lean combustion is being executed, the ECU 92 executes steps S202 and S203. Lean combustion increases the amount of NOx adsorbed in the catalytic converter 33b. Thus, the counter value Cnox, representing the amount of adsorbed NOx, is increased in steps S202, S203. That is, an addition value A is computed in step S202 and is added to the counter value Cnox in step 203.

[0054] In step S202, the ECU 92 computes the addition value A based the engine speed NE and the final injection amount Qfin by referring to a map, which was prepared through experiments. If the engine speed NE is constant, the addition value A increases as the final injection amount Qfin increases. This is because the amount of generated NOx increases if the fuel injection amount increases during lean combustion, and the amount of NOx adsorbed by the catalytic converter 33b also increases accordingly. In step S203, the ECU 92 adds the addition value A to the NOx counter value Cnox and sets the result as a new counter value Cnox. Increasing the value of the NOx counter value Cnox by the amount of the addition value A permits the counter value Cnox to represent the amount of NOx adsorbed by the catalytic converter 33b.

[0055] After computing the NOx counter value Cnox, the ECU 92 moves to step S204. In steps S204 to S206, the flag XR is set to one if the amount of NOx adsorbed in the catalytic converter 33b is greater than an acceptable level. In step S204, the ECU 92 judges whether the NOx counter value Cnox is equal to or greater than a predetermined threshold value β. The threshold value β corresponds to the acceptable level of the amount of NOx adsorbed in the catalytic converter 33b. If the counter value Cnox is less than the value β in step S204, that is, if the amount of NOx adsorbed in the catalytic converter 33b is smaller than the acceptable level, the ECU 92 temporarily suspends the current routine.

[0056] If the equation Cnox is equal to or greater the value β, that is, if the amount of the adsorbed NOx is greater than the acceptable level in step S204, the ECU 92 moves to step S205. In step S205, the ECU 92 judges whether the running conditions of the engine 11 are in a range where rich-spike control procedure can be executed. If the determination is negative in step S205, the ECU 92 temporarily suspends the current routine. If the determination is positive in step S205, the ECU 92 moves to step S206. In step S206, the ECU 92 sets the flag XR to one and stores the value of the flag XR in a predetermined area in the RAM 95. Thereafter, the ECU 92 temporarily suspends the routine.

[0057] When the flag XR is set to one, the ECU 92 sets the mode value MODE to two and executes rich combustion. Rich combustion reduces the NOx adsorbed in the catalytic converter 33b, which decreases the amount of NOx adsorbed in the catalytic converter 33b. When the mode value MODE is set to two, the ECU 92 judges that the mode value MODE is not zero in step S201 and moves to step S207. During stoichiometric combustion or during rich combustion, the NOx adsorbed in the catalytic converter 33b is reduced. Thus, the amount of NOx in the converter 33b is decreased. Accordingly, the NOx counter value Cnox is decreased through steps S207 and S208. That is, a subtraction value D is computed in step S207 and the value D is subtracted from the NOx counter value Cnox in step S208.

[0058] In step S207, the ECU 92 computes the subtraction value D based on the following equation (1).

$$D=C(Qfin((\lambda-A/F) \qquad (1)$$

D: subtraction value
C: conversion coefficient
Qfin: final fuel injection amount
λ: reference air-fuel ratio
A/F: actual air-fuel ratio

[0059] In the equation (1), the reference air-fuel ratio λ is the air-fuel ratio when the amount of NOx that is reduced, is equal to the amount of NOx that is adsorbed by the catalytic converter 33b. The ratio λ is slightly leaner than the stoichiometric air-fuel ratio. The actual air-fuel ratio A/F is computed based on detection signals from the air-fuel ratio sensor 34. Therefore, the equation (1) ($D=C(Qfin((\lambda-A/F)$) can be used to calculate the amount of NOx that is reduced by burning a mixture, the amount of fuel in which is Qfin and the air fuel ratio of which is A/F.

[0060] The subtraction value D computed in step S207 is increased when the final fuel injection amount Qfin is increased. Also, the value D is increased when the actual air-fuel ratio A/F becomes richer. This is because a greater fuel injection amount and a richer air-fuel ratio A/F increase the amount of adsorbed NOx that is reduced. In step S208, the ECU 92 subtracts the subtraction value D from the NOx counter value Cnox and sets the resultant as a new NOx counter value Cnox. Decreasing the value of the NOx counter value Cnox by the amount of the subtraction value D permits the counter value Cnox to correspond to the amount of NOx adsorbed by the catalytic converter 33b.

[0061] After computing the NOx counter value Cnox, the ECU 92 moves to step 209. In steps S209 and S210, the flag XR is set to zero when the amount of NOx adsorbed by the catalytic converter 33b is zero. The ECU 92 judges whether the amount of NOx adsorbed by the catalytic converter 33b, or the NOx counter value Cnox, is zero. If the Cnox is not zero, the ECU 92 temporarily suspends the current routine. If the Cnox is zero, the ECU 92 moves to step S210 sets the flag XR to zero and stores the value of the flag XR in a predetermined area of the RAM 95. Thereafter, the ECU 92 temporarily suspends the current routine.

[0062] If the flag XR is zero, the ECU 92 sets the mode value MODE to a value other than two and terminates rich-spike control procedure. Execution of rich-spike control procedure prevents the saturation of the catalytic converter 33b with NOx.

[0063] Changes of the flag XR, the air fuel ratio A/F and the NOx counter value Cnox during rich-spike control procedure will now be described with reference Fig. 5.

[0064] If the NOx counter value Cnox reaches the value β, as shown in Fig. 5(c), the flag XR is changed from zero to one, as shown in Fig. 5(a), which initiates rich combustion. Then, the air-fuel ratio is changed to a richer value, as shown in Fig. 5(b). The combustion mode is switched from lean combustion to rich combustion in a period T1. The NOx counter value Cnox is gradually decreased during the period T1. Rich combustion is continued thereafter and the counter value Cnox is quickly decreased. That is, when the combustion mode is switched from lean combustion to rich combustion, the air-fuel ratio A/F is close to the stoichiometric air-fuel ratio, or the reference air-fuel ratio λ in the equation (1). Accordingly, the subtraction value D of the NOx counter value Cnox decreases.

[0065] When the NOx counter value Cnox reaches zero, as shown in Fig. 5(c), the flag XR is switched from one to zero. When the combustion mode is switched to lean combustion after the flag XR is set to zero, the air-fuel ratio A/F becomes leaner, as shown in Fig. 5(b). The combustion mode is switched from rich combustion to lean combustion in a period T2. During the period T2, the counter value Cnox is maintained near zero. When lean combustion is continued, the counter value Cnox gradually increases.

[0066] The amount of NOx adsorbed by the catalytic converter 33b and the amount of fuel for eliminating the adsorbed NOx will now be described with reference to Fig. 6.

[0067] In Fig. 6, broken line L2 shows the stoichiometric amount of fuel that is required for eliminating the NOx that corresponds to the NOx counter value Cnox. However, in the actual rich-spike control procedure, the NOx counter value Cnox does not decrease quickly even if the fuel injection amount is increased in the period T1 of Figs. 5(a) to 5(c), during which the combustion mode is switched from lean combustion to rich combustion. In other words, the increase of fuel injection cannot effectively decrease the NOx counter value Cnox. Further, in the period T2, during which the combustion is switched from rich combustion to lean combustion, the fuel injection amount is gradually decreased. However, the burned fuel does not contribute to the decrease of the NOx counter value Cnox. Therefore, the amount of fuel required for lowering the NOx counter value Cnox to zero is increased from the amount of broken line L2 to the amount of dotted line L1. That is, the required fuel amount is increased by the amount required for switching the combustion between lean combustion and rich combustion.

[0068] Since the NOx adsorbed in the catalytic converter 33b is reduced through a chemical reaction with HC, the reduction process does not necessarily follow the stoichiometric course. Specifically, the reduction requires more fuel than the stoichiometric value. Thus, the fuel required for lowering the NOx counter value Cnox is increased from the amount of dotted line L1 to the amount of solid line L3. That is, the required fuel amount is increased by the amount equal to the difference between the actual required amount and the stoichiometric amount. As shown by solid line L3, when the counter value Cnox has a value near zero, the fuel amount increases as the counter value Cnox approaches zero. That is, when the amount of NOx adsorbed by the catalytic converter 33b is small, exhaust gas cannot effectively contact the adsorbed NOx and the NOx is not effectively reduced.

[0069] The engine 11 executes lean combustion by executing the vacuum production procedure and rich-spike control procedure. In the engine 11, the negative pressure PBK is increased to a level required for actuating the brake booster 50, and the catalytic converter 33b is not saturated with NOx. The emissions are thus reduced to an acceptable level. However, if the vacuum production procedure and rich-spike control procedure are executed independently, the combustion is switched to stoichiometric combustion when the negative pressure PBK is insufficient and to rich combustion when the NOx counter value Cnox is equal to or greater than the value β.

[0070] As described above, more fuel is needed when the vacuum production procedure or rich-spike control procedure is executed than when lean combustion is executed. Particularly, during rich-spike control procedure, fuel that does not contribute to the efficient decrease of the NOx counter value Cnox is burned when switching the combustion mode between lean combustion and rich combustion (the periods T1 and T2 in Figs. 5(a) to 5(c)). If the vacuum production procedure and rich-spike control procedure are performed independently, deterioration of the emission level due to NOx saturaton of the catalytic converter 33b is prevented. However, rich combustion for reducing the adsorbed NOx is not executed effectively, which lowers the fuel economy.

[0071] In this embodiment, when stoichiometric combustion is executed by the vacuum production procedure, rich combustion (rich-spike control procedure) is performed subsequent to stoichiometric combustion if the NOx counter value Cnox is equal to or greater than the value α, which is smaller than the value β. In this manner, the NOx adsorbed in the catalytic converter 33b is reduced not only by the normal rich-spike control procedure but also by a rich-spike control procedure executed simultaneously with the vacuum production procedure. This permits rich combustion for reducing NOx to be effectively executed. Also, the fuel economy is not lowered by the execution of rich-spike control procedure, and the emission level is not deteriorated by saturation of the catalytic converter 33b.

[0072] The value α is used for judging whether rich combustion needs to be executed subsequent to stoichiometric combustion of the vacuum production procedure. As shown in Fig. 6, the value α is set greater, or closer to the value β, than the Cnox values at the point where the fuel amount represented by solid line L3 is a minimum.

[0073] The vacuum production procedure and rich-spike control procedure of this embodiment will now be described with reference to the time chart of Figs. 7(a) to 7(d).

[0074] When the mode value MODE is zero, as shown in Fig. 7(a), lean combustion is being performed. At this time, the NOx counter value Cnox is gradually increased. If the flag XB is changed from zero to one due to insufficient negative pressure PBK, as shown in Fig. 7(c), the mode value MODE is switched to one and stoichiometric combustion is started.

[0075] When the negative pressure PBK, for actuating the brake booster 50, reaches a sufficinet level due to stoichiometric combustion, the flag XB is changed from one to zero. If the counter value Cnox is equal to or greater than the value α at this time, the rich spike control execution flag XR is changed from zero to one. Accordingly, the mode value MODE is changed from one to two and rich combustion is started. In rich combustion, the NOx counter value Cnox is quickly decreased.

[0076] When the NOx counter value Cnox becomes zero during rich combustion, the flag XR is changed from one to zero. Accordingly, the mode value MODE is changed to one and then to zero, and the combustion mode of the engine 11 is returned to lean combustion, which was the previous combustion mode.

[0077] In this manner, if the NOx counter value Cnox is equal to or greater than the value a when a sufficient level of negative pressure PBK is produced by the vacuum production procedure, rich combustion is executed subsequent to stoichiometric combustion. Accordingly, the NOx adsorbed in the catalytic converter 33b is reduced. Therefore, NOx is effectively reduced by rich combustion to prevent the fuel economy from being lowered by rich-spike control procedure while preventing deterioration of the emission level due to saturation of the catalytic converter 33b.

[0078] Changing of the mode value MODE will now be described with reference to Fig. 8. Fig. 8 is a flowchart showing a routine for changing the mode value MODE in accordance with the value of the flag XB and the value of the flag XR. This routine is an interrupt executed by the ECU 92 at predetermined time intervals.

[0079] In step S301 of Fig. 8, the ECU 92 judges whether the mode value MODE is zero. If the mode value MODE is zero, the ECU 92 moves to step S302. In step S302, the ECU 92 judges whether the flag XB is zero. If the negative pressure PBK is insufficient during lean combustion, the flag XB is one and the determination of step S302 is negative. In this case, the ECU 92 moves to step S305. In step S305, the ECU 92 sets the mode value MODE to one (stoichiometric combustion) and temporarily terminates the current routine. In this manner, the mode value MODE is set to one and lean combustion is temporarily suspended, accordingly. Subsequently, stoichiometric combustion is started to produce the required level of the negative pressure PBK.

[0080] If the flag XB is zero in step S302, the ECU 92 moves to step S303. In step S303, the ECU 92 judges whether the rich spike control execution flag XR is one. If the flag XR is zero, the ECU 92 temporarily suspends the current routine. If the flag XR is one, the ECU 92 moves to step S304.

[0081] When the vacuum production procedure is not being executed during lean combustion, the ECU 92 moves to step S304 when the flag XR is one and the NOx counter value Cnox is equal to or greater than the value β. In step S304, the ECU 92 sets the mode value MODE to two (rich combustion) and temporarily suspends the current routine. Accordingly, lean combustion is discontinued. NOx that was adsorbed by the catalytic converter 33b during rich combustion, which is represented by the NOx counter value Cnox, is decreased to zero.

[0082] If the mode value MODE is not zero in step S301, the ECU 92 moves to step S306. In step S306, the ECU 92 judges whether the mode value MODE is one. If the mode value MODE is one, the ECU 92 moves to step S307. In step S307, the ECU 92 judges whether the flag XB is one.

[0083] If the flag XB is one in step S307, the ECU 92 temporarily suspends the current routine. If the negative pressure PBK has been reduced enough for actuating the brake booster 50 by the vacuum production procedure, the determination of the step S307 is negative. In this case, the ECU 92 moves to step S308.

[0084] In step S308, the ECU 92 changes the value of the mode value MODE when a sufficient level of the negative pressure PBK is produced. That is, if the NOx counter value Cnox is equal to or greater than the value α when a sufficient level of the negative pressure PBK has been produced, the ECU 92 executes rich combustion to reduce the NOx adsorbed in the catalytic converter 33b for lowering the NOx counter value Cnox to zero. If the NOx counter value Cnox is less than the value α, the ECU 92 returns the mode value MODE to the value it had before the vacuum production procedure was executed. When the ECU 92 changes the mode value MODE after the negative pressure PBK has reached an appropriate level, the ECU 92 temporarily suspends the current routine.

[0085] Step S308 will now be described with reference to Fig. 9. Fig. 9 is a flowchart showing a routine for changing the mode value MODE when the negative pressure PBK is sufficient for braking. The ECU 92 executes the routine of Fig. 9 every time step S308 of the routine shown in Fig. 8 is executed.

[0086] In step S401, the ECU 92 judges whether the value of the NOx counter value Cnox is equal to or greater than the value α. If the counter value Cnox is less than the value α, the ECU 92 moves to step S404. In step S404, the ECU 92 returns the mode value MODE to the value it had before the vacuum production procedure was executed and returns to the routine of Fig. 8. If the counter value Cnox is equal to or greater than the value α, the ECU 92 moves to step S402.

[0087] The ECU 92 changes the flag XR to one in step S402 and stores the value of XR in the predetermined area in the RAM 95. In step S403, the ECU 92 sets the mode value MODE to two (rich combustion) and returns to the routine of Fig. 8. Accordingly, rich combustion is started, which decreases the amount of NOx adsorbed in the catalytic converter 33b.

[0088] As described above, if the NOx counter value Cnox is equal to or greater than the value α when the negative pressure PBK is sufficient, rich combustion is executed subsequent to stoichiometric combustion of the vacuum production procedure, which reduces the NOx adsorbed in the catalytic converter 33b. In this manner, besides the ordinary rich-spike control procedure, a rich-spike control procedure is performed during the vacuum production procedure to reduce NOx adsorbed in the catalytic converter 33b. NOx is reduced by efficiently executing rich combustion, which improves the fuel economy. At the same time, the level of emissions does not deteriorate due to saturation of the catalytic converter 33b.

[0089] If the mode value MODE is not one in step S306 of the routine shown in Fig. 8, the ECU 92 moves to step S309. In this case, the mode value MODE is two. The ECU 92 judges whether the flag XR is zero. If the flag XR is not zero, the ECU 92 temporarily suspends the current routine.

[0090] Thus, once the value of the flag XR is set to one, rich combustion is continued until the NOx counter value Cnox is zero and the value of the flag XR is zero in step S210 of the routine shown in Fig. 4. When the NOx counter value Cnox becomes zero and the value of the flag XR is zero, the determination of step S309 is positive and the ECU 92 moves to step S310.

[0091] The ECU 92 returns the mode value MODE to the value it had before rich combustion in step S310. That is, the mode value MODE is returned to one (stoichiometric combustion) or to zero (lean combustion). After step S310, the ECU 92 temporarily suspends the current routine.

[0092] The above illustrated embodiment has the following advantages.

[0093] (1) If the NOx counter value Cnox is greater than the value α during the vacuum production procedure, rich combustion is executed subsequent to stoichiometric combustion, which reduces the NOx adsorbed in the catalytic converter 33b. Therefore, in addition to the ordinary rich-spike control procedure, a rich-spike control procedure accompanying the vacuum production procedure reduces the NOx adsorbed in the catalytic converter 33b. Thus, rich-spike control procedure is efficiently executed to reduce NOx, which prevents the fuel economy from being lowered by rich-spike control procedure. Also, the level of emissions does not deteriorate due to saturation of the catalytic converter 33b by NOx.

[0094] (2) NOx adsorbed in the catalytic converter 33b is reduced not only by rich combustion but also by stoichiometric combustion during the vacuum production procedure. Whether the NOx counter value Cnox is equal to the value α is judged when the vacuum production procedure is completed, that is, when the negative pressure PBK is sufficiently lowered by stoichiometric combustion. This prevents the combustion mode from being unnecessarily switched from stoichiometric combustion to rich combustion, which improves the fuel economy. Specifically, when stoichiometric combustion of the vacuum production procedure reduces the NOx in the catalytic converter 33b such that the NOx counter value Cnox falls below the value α, stoichiometric combustion is not switched to rich combustion. Therefore, the fuel economy is not lowered by an unecessary switch to rich combustion.

[0095] A second embodiment of the present invention will now be described with reference to Figs. 10 to 12. In the first embodiment, whether rch combustion is to be executed subsequent to stoichiometric combustion is determined based on the NOx counter value Cnox when the vacuum production procedure is completed. In the second embodiment, whether rich combustion is to be executed is determined based on the counter value Cnox when the vacuum production procedure is started. That is, if the level of the negative pressure PBK is insufficient when starting the vacuum production procedure and the NOx counter value Cnox is equal to or greater than the value α, rich combustion (rich-spike control procedure) is executed instead of the stoichiometric combustion of the vacuum production procedure. Rich combustion lowers the negative pressure PBK to an appropriate level. Also, since rich combustion is started at an early stage, the NOx is efficiently reduced even if a great amount of Nox is adsorbed in the catalytic converter 33b.

[0096] The second embodiment is the same as the first embodiment except for the combustion mode switching routine. Therefore, the differences from the first embodiment will mainly be discussed below.

[0097] Fig. 10 shows a combustion mode switching routine according to the second embodiment. Step S308 of the combustion mode switching routine (Fig. 8) in the first embodiment is omitted and step S305 is replaced by step S505. The other steps in the routine of Fig. 10 are the same as those of Fig. 8.

[0098] In step S501, the ECU 92 judges whether the mode value MODE is zero. If MODE is zero, the ECU 92 moves to step S502. In step S502, the ECU 92 judges whether the flag XB is zero. The value of the flag XB is determined according to the negative pressure PBK. If the negative pressure PBK is insufficient and the flag XB is one, the ECU 92 moves to step S505.

[0099] In step S505, the ECU 92 switches the mode value MODE when the operation for producing a sufficiently low negative pressure PBK is started. That is, if the NOx counter value Cnox is less than the value α when starting the operation for lowering the negative pressure PBK, stoichiometric combustion of the vacuum production procedure is executed. If the NOx counter value Cnox is equal to or greater than the value α, the ECU 92 executes rich combustion instead of stoichiometric combustion of the vacuum production procedure.

[0100] Step S505 starts rich combustion at a relatively early stage. Therefore, the NOx adsorbed in the catalytic converter 33b is efficiently reduced, even if the amount of adsorbed NOx is relatively great. At the same time, the negative pressure PBK reaches the required level. In this manner, the ECU 92 switches the mode value MODE when the operation for lowering the negative pressure PBK is started. Thereafter, the ECU 92 suspends the combustion mode switching routine.

[0101] Step S505 will now be described with reference to Fig. 11. Fig. 11 is a flowchart showing a routine for switching the mode value MODE. The routine of Fig. 11 is executed when the operation for lowering the negative pressure PBK is started. The routine of Fig. 11 is executed by the ECU 92 every time step S505 (Fig. 10) is executed.

[0102] In step S601, the ECU 92 determines whether the NOx counter value Cnox is equal to or greater than the value α. If the counter value Cnox is less than the value α, the ECU 92 moves to step S604. In step S604, the ECU 92 sets the mode value MODE to one (stoichiometric combustion) and returns to the routine of Fig. 10. Accordingly, stoichiometric combustion is started and the negative pressure PBK is sufficiently low. If the counter value Cnox is equal to or greater than the value α in step S601, the ECU 92 moves to step S602.

[0103] In step S602, the ECU 92 sets the flag XR to one and stores the value of the flag XR in the predetermined area of the RAM 95. In step S603, the ECU 92 sets the mode value MODE to two (rich combustion) and returns to the routine of Fig. 10. Accordingly, rich combustion is started, which decreases the NOx adsorbed in the catalytic converter 33b. Also, the level of the negative pressure PBK is appropriate for braking.

[0104] If the counter value Cnox is equal or greater than the value α when the operation for lowering the negative pressure PBK is started, rich combustion is started instead of stoichiometric combustion of the vacuum production procedure. This reduces the NOx adsorbed in the catalytic converter 33b. In this manner, rich combustion is executed in an early stage. Therefore, the NOx is efficiently reduced, even if a relatively great amount of NOx is adsorbed in the catalytic converter 33b.

[0105] If the flag XB is zero in step S502 in Fig. 10, the ECU 92 moves to step S503. In step S503, the ECU 92 judges whether the flag XR is one. If the flag XR is zero, the ECU 92 temporarily suspends the current routine. If the flag XR is one, the ECU 92 moves to step S504. In step S504, the ECU 92 sets the mode value MODE to two and temporarily suspends the current routine.

[0106] If the mode value MODE is not zero in step S501, the ECU 92 moves to step S506. The ECU 92 judges whether the MODE value is one (stoichiometric combustion). If the MODE value is one, the ECU 92 moves to step S507. In step S507, the ECU 92 judges whether the flag XB is one.

[0107] If the flag XB is one in step S507, the ECU 92 temporarily suspends the current routine. If the level of the negative pressure PBK is low enough for actuating the brake booster 50, the flag XB is zero. In this case, the determination of step S507 is negative and the ECU 92 moves to step S510. In step S510, the ECU 92 executes an operation for returning the mode value MODE to its previous value after the vacuum production procedure or rich-spike control procedure (rich combustion) is completed.

[0108] If the ECU 92 moves to step S510 from step S507 immediately after the negative pressure PBK is sufficiently lowered by the vacuum production procedure, the ECU 92 returns the mode value MODE to zero in step S510. Thereafter, the ECU 92 temporarily suspends the current routine.

[0109] If the mode value MODE is not one in step S506, the ECU 92 moves to step S509. In this case, the value MODE is two (rich combustion). In step S509, the ECU 92 judges whether the flag XR is zero. If the flag XR is not zero, the ECU 92 temporarily suspends the current routine. If the flag XR is zero, the ECU 92 moves to step S510.

[0110] After completing the vacuum production procedure or after rich-spike control procedure (rich combustion), the ECU 92 returns the mode value MODE to its previous value in step S510. If the ECU 92 moves to step S510 immediately after the Nox counter value Cnox becomes zero through rich combustion, the ECU 92 returns the mode value MODE to one and then to zero. Thereafter, the ECU 92 temporarily suspends the current routine.

[0111] The vacuum production procedure and rich-spike control procedure will now be described with reference to the time chart of Figs. 12(a) to 12(d).

[0112] When the mode value MODE is zero and lean combustion is being executed, as shown in Fig. 12(a), the Nox counter value Cnox gradually increases, as shown in Fig. 12(b). If the negative pressure PBK is insufficient in this state, the flag XB is changed from zero to one, as shown in Fig. 12(c). If the NOx counter value Cnox is greater than the value α at this time, the flag XR is changed from zero to one, as shown in Fig. 12(d). Accordingly, the combustion mode value MODE is set to two. Although the flag XB is one, stoichiometric combustion of the vacuum production procedure is not executed. Instead, rich combustion, based on the mode value MODE, which is two, is executed. Rich combustion quickly decreases the NOx counter value Cnox.

[0113] When the NOx counter value Cnox is zero, the flag XR is zero. In this case, the mode value MODE is changed to one and then to zero. Accordingly, the engine combustion mode is returned to lean combustion. The NOx counter value Cnox is maintained at zero during stoichiometric combustion and is gradually increased during lean combustion. The negative pressure PBK falls to sufficient level for actuating the brake booster 50 during rich combustion or during stoichiometric combustion. When the negative pressure PBK is sufficiently low, the flag XB is changed from one to zero.

[0114] The second embodiment has the following advantage.

[0115] (3) If the NOx counter value Cnox is greater than the value α when the vacuum production procedure is started, rich combustion is executed instead of stoichiometric combustion of the vacuum production procedure. In this manner, rich combustion is started in an early stage. Therefore, even if a great amount of NOx is adsorbed in the catalytic converter 33b, the adsorbed NOx is efficiently reduced while the negative pressure PBK is adequate for braking.

[0116] A third embodiment of the present invention will now be described with reference to Figs. 13 to 17. The third embodiment is different from the first and second embodiments in that whether rich combustion is executed is determined when the vacuum production procedure is started and when the vacuum production procedure is completed. The determination is based on the NOx counter value Cnox. Rich combustion is executed if the NOx counter value Cnox is equal to or greater than a predetermined value $\alpha 2$, which is equal to the value α, when the vacuum production procedure is completed. Also, if the NOx counter value Cnox is equal to or greater than a predetermined value $\alpha 1$, which is greater than the value α, when the vacuum production procedure is started, rich combustion is started. Rich combustion is executed for reducing the NOx adsorbed in the catalytic converter 33b. Therefore, even if a relatively great amount of NOx is adsorbed in the catalytic converter 33b, the Nox is efficiently reduced.

[0117] The third embodiment is the same as the first and second embodiments except for the combustion mode switching routine. Therefore, the differences from the first embodiment will mainly be discussed below.

[0118] Fig. 13 is a flowchart showing a combustion mode switching routine according to the third embodiment. The routine of Fig. 13 is different from the routines of Figs. 8 and 10 in steps S708 and S705. That is, the content of step S708 is different from that of step S308 (Fig. 8) of the first embodiment, and the content of step S705 is different from that of step S505 (Fig. 10) according to the second embodiment.

[0119] In step S701 of the routine shown in Fig. 13, the ECU 92 judges whether the value MODE is zero. In step S702, the ECU 92 judges whether the flag XB is zero. If the value MODE is zero and the flag XB is one, the ECU 92 moves from step S702 to step S705.

[0120] In step S705, the ECU 92 switches the mode value MODE when the operation for lowering the negative pressure PBK is started. That is, if the NOx counter value Cnox is less than the value $\alpha 1 (\alpha 1 > \alpha)$ when the flag XB is changed from zero to one, the ECU 92 executes stoichiometric combustion of the vacuum production procedure. If the NOx counter value Cnox is equal to or greater than the value $\alpha 1$, the ECU 92 executes rich combustion instead of stoichiometric combustion of the vacuum production procedure. In this manner, rich combustion is started in a relatively early stage. Therefore, even if a relatively great amount of NOx is adsorbed by the catalytic converter 33b, Nox is efficiently reduced, and the required level of the negative pressure PBK is produced. Thereafter, the ECU 92 temporarily suspends the current routine.

[0121] Step S705 will now be described with reference to Fig. 14. Fig. 14 is a flowchart showing a routine for switching the mode value MODE. The routine of Fig. 14 is executed when the operation for lowering the negative pressure PBK is started. The routine of Fig. 14 is executed by the ECU 92 every time step S705 (Fig. 13) is executed.

[0122] In step S801, the ECU 92 judges whether the NOx counter value Cnox is equal to or greater than the value $\alpha 1$. The value $\alpha 1$ is between the value α of the first and second embodiments and the value β, which is used in step S204 of the routine shown in Fig. 4. However, the value $\alpha 1$ is by far less than the value β and is closer to the value α. If the counter value Cnox is not equal to or greater than the value α1, the ECU 92 moves to step S804 and sets the mode value MODE to one. The ECU 92 then returns to the combustion mode switching routine (Fig. 13). The value one of the mode value MODE starts stoichiometric combustion, which lowers the negative pressure PBK to the required level.

[0123] It the counter value Cnox is equal to or greater than the value α1 in step S801, the ECU 92 moves to step 3802. In step S802, the ECU 92 sets the flag XR to one and sets the mode value MODE to two in step S803. Thereafter, the ECU 92 returns to the routine of Fig. 13. In accordance with the mode value MODE, which is two, rich combustion is started. Accordingly, NOx adsorbed in the catalytic converter 33b is decreased and the required level of the negative pressure PBK is produced.

[0124] If the counter value Cnox is equal or greater than the value α1 (α1>α) when the operation for lowering the negative pressure PBK is started, rich combustion is started instead of stoichiometric combustion of the vacuum production procedure. This reduces the NOx adsorbed in the catalytic converter 33b. In this manner, rich combustion is executed in an early stage. Therefore, the NOx is efficiently reduced, even if a relatively great amount of NOx is adsorbed in the catalytic converter 33b.

[0125] If the flag XB is zero in step S702 of Fig. 13, the ECU 92 moves to step S703. In step S703, the ECU 92 judges whether the flag XR is one. If the flag XR is zero, the ECU 92 temporarily suspends the current routine. If the flag XR is one, the ECU 92 moves to step S704. In step S704, the ECU 92 sets the mode value MODE to two (rich combustion) and temporarily suspends the current routine.

[0126] If the mode value MODE is not zero in step S701, the ECU 92 moves to step S706. In step S706, the ECU 92 judges whether the mode value MODE is one (stoichiometric combustion) . In step S707, the ECU 92 judges whether the flag XB is one. If the mode value MODE is one and the flag XB is zero, the ECU moves to step S708. If the flag XB is one in step S707, the ECU temporarily suspends the current routine.

[0127] In step S708, the ECU 92 changes the value of the mode value MODE when the negative pressure PBK is appropriate. That is, if the NOx counter value Cnox is equal to or greater than the value α2 (α2=α) when the flag XB is changed from one to zero, the ECU 92 executes rich combustion to reduce the NOx adsorbed in the catalytic converter 33b for lowering the NOx counter value Cnox to zero. If the NOx counter value Cnox is less than the value α2, the ECU 92 returns the mode value MODE to the value it had before the vacuum production procedure was executed. When the ECU 92 changes the mode value MODE after the negative pressure PBK is sufficiently lowered, the ECU 92 temporarily suspends the current routine.

[0128] Step S708 will now be described with reference to Fig. 15. Fig. 15 is a flowchart showing a routine for changing the mode value MODE when the negative pressure PBK is appropriate. The ECU 92 executes the routine of Fig. 14 every time step S708 of the routine shown in Fig. 13 is executed.

[0129] In step S901, the ECU 92 judges whether the NOx counter value Cnox is equal to or greater than the value α2. If counter value Cnox is less than the value α2, the ECU 92 moves to step S904. In step S904, the ECU 92 returns the mode value MODE to the value it had before the vacuum production procedure was executed and returns to the routine of Fig. 13. If the counter value Cnox is equal to or greater than the value α2, the ECU 92 moves to step S902.

[0130] The ECU 92 changes the flag XR to one in step S902 and stores the value of XR in the predetermined area in the RAM 95. In step S903, the ECU 92 sets the mode value MODE to two (rich combustion) and returns to the routine of Fig. 13. Accordingly, rich combustion is started. In this manner, if the NOx counter value Cnox is equal to or greater than the value α2 when the negative pressure PBK has been sufficiently lowered by the vacuum production procedure, rich combustion is executed subsequent to stoichiometric combustion of the vacuum production procedure, which reduces the NOx adsorbed in the catalytic converter 33b.

[0131] If the mode value MODE is not one in step S706 of the routine shown in Fig. 13, the ECU 92 moves to step S709. When the ECU 92 moves to step S709, the mode value MODE is two. In step S709, the ECU 92 judges whether the flag XR is zero. If the flag XR is not zero, the ECU 92 temporarily suspends the current routine. If the flag XR is zero, the ECU 92 moves to step S710.

[0132] After rich-spike control procedure (rich combustion) procedure is completed, the ECU 92 returns the mode value MODE to its previous value in step S710. That is, the ECU 92 returns the mode value MODE to the value it had before rich combustion was started. After step S710, the ECU 92 temporarily suspends the current routine.

[0133] Rich-spike control procedure will now be described with the time chart shown Figs. 16 and 17.

[0134] When the mode value MODE is zero and lean combustion is being executed, as shown in Fig. 16(a), the Nox counter value Cnox gradually increases, as shown in Fig. 16(b). If the negative pressure PBK is insufficient in this state, the flag XB is changed from zero to one, as shown in Fig. 16(c). If the NOx counter value Cnox is greater than the value α1(α1>α) at this time, the flag XR is changed from zero to one, as shown in Fig. 16(d). Accordingly, the combustion mode value MODE is set to two. Although the flag XB is one, stoichiometric combustion of the vacuum production procedure is not executed. Instead, rich combustion, based on the mode value MODE, which is two, is executed. Rich combustion quickly decreases the NOx counter value Cnox.

[0135] When the NOx counter value Cnox is zero, the flag XR is zero. In this case, the mode value MODE is changed to one and then to zero. Accordingly, the engine combustion mode is returned to lean combustion. The NOx counter value Cnox is maintained at zero during stoichiometric combustion and is gradually increased during lean combustion. The negative pressure PBK falls to an appropriate level for actuating the brake booster 50 during rich combustion or during stoichiometric combustion. When the negative pressure PBK is adequate, the flag XB is changed from one to zero.

[0136] If the negative pressure PBK is insufficient during lean combustion and the flag XB is changed from zero to one as shown in Fig. 17(c), the NOx counter value Cnox may be smaller than the value $\alpha 1$ as shown in Fig. 17(b). In this case, the mode value MODE is changed to one as shown in Fig. 17(a) and stoichiometric combustion is started. During stoichiometric combustion, the NOx counter value Cnox is decreased slowly in comparison to rich combustion.

[0137] When the negative pressure PBK is sufficiently lowered by stoichiometric combustion, the flag XB is changed from one to zero. If the counter value Cnox is equal to or greater than the value $\alpha 2 (\alpha 2 = \alpha)$ at this time, the flag XR is changed from zero to one. Accordingly, the mode value MODE is changed from one to two and rich combustion is started. In rich combustion, the NOx counter value Cnox is quickly decreased.

[0138] When the NOx counter value Cnox becomes zero during rich combustion, the flag XR is changed from one to zero. Accordingly, the mode value MODE is changed to one and then to zero, and the combustion mode of the engine 11 is returned to lean combustion, which was the previous combustion mode.

[0139] The third embodiment has the following advantages.

[0140] (4) If the NOx counter value Cnox is equal to or greater than the value $\alpha 2$ $(\alpha 2 = \alpha)$ when the negative pressure PBK has been sufficiently lowered by stoichiometric combustion of the vacuum production procedure, rich combustion is executed subsequent to stoichiometric combustion. The rich combustion efficiently reduces the adsorbed NOx, which prevents the fuel economy from being lowered by rich-spike control procedure.

[0141] (5) If the NOx counter NOx is equal to or greater than the value $\alpha 1$ $(\alpha 1 > \alpha)$ when the vacuum production procedure is started for lowering the negative pressure PBK, the rich-spike control procedure is started instead of stoichiometric combustion of the vacuum production procedure. In this manner, rich combustion is started at a relatively early stage. Therefore, even if a relatively great amount NOx is adsorbed in the catalytic converter 33b, the NOx is efficiently reduced.

[0142] The illustrated embodiments may be modified as follows. The following constructions have the same advantages as the illustrated embodiments.

[0143] In the illustrated embodiments, the present invention is applied to the engine 11, which temporarily executes stoichiometric combustion for executing the vacuum production procedure. However, the present invention may be embodied in an engine that temporarily executes stoichiometric combustion for operations other than the vacuum production procedure. Operations in which stoichiometric combustion is temporarily executed include an operation for producing negative pressure for a device actuated by negative pressure other than the brake booster 50. For example, the present invention may be embodied for actuating a valve actuator. Also, the present invention may be embodied in an engine that temporarily executes rich combustion.

[0144] In the third embodiment, the value $\alpha 1$ may be a value different from the value α used in the first and second embodiments.

[0145] In the third embodiment, the value $\alpha 2$ need not be a value close to the value α.

[0146] Therefore, the present examples and embodiments are to be considered as illustrative and not restrictive and the invention is not to be limited to the details given herein, but may be modified within the scope and equivalence of the appended claims.

[0147] An internal combustion engine has a reduction occlusion type NOx catalyst located in an exhaust passage for adsorbing NOx. A controller of the engine temporarily discontinues a lean combustion mode when a predetermined condition is satisfied during the lean combustion mode. When the amount of NOx adsorbed in the catalyst is greater than an acceptable value, the controller executes a rich-spike control procedure to reduce NOx adsorbed in the catalyst by temporarily switching the combustion mode of the engine to a rich combustion mode. The controller determines whether the amount of NOx adsorbed in the catalyst is greater than a predetermined determination value, which is smaller than the acceptable value, when lean combustion is discontinued. When the amount of NOx adsorbed in the catalyst is determined to be greater than the determination value, the controller executes rich-spike control procedure.

Claims

1. A controller for an internal combustion engine, wherein the engine has a reduction occlusion type NOx catalyst located in an exhaust passage for adsorbing NOx, wherein the controller temporarily discontinues a lean combustion mode when a predetermined condition is satisfied during the lean combustion mode, wherein, when the amount of NOx adsorbed in the catalyst is greater than an acceptable value, the controller executes a rich-spike control procedure to reduce NOx adsorbed in the catalyst by temporarily switching the combus-

tion mode of the engine to a rich combustion mode, the controller being characterized by:

determination means for determining whether the amount of NOx adsorbed in the catalyst is greater than a predetermined determination value, which is smaller than the acceptable value, when the lean combustion mode is discontinued; and
combustion mode switching means for executing rich-spike control procedure when the determination means determines that the amount of NOx adsorbed in the catalyst is greater than the determination value.

2. The controller according to claim 1, characterized by that the determination means determines whether the amount of NOx adsorbed in the catalyst is greater than the determination value when the predetermined condition is satisfied during the lean combustion mode.

3. The controller according to claim 1, characterized by that the determination means determines whether the amount of NOx adsorbed in the catalyst is greater than the determination value when the predetermined condition is not satisfied.

4. The controller according to claim 3, characterized by that the determination value is a first determination value, and that, when the predetermined condition is satisfied, the determination means determines whether the amount of NOx adsorbed in the catalyst is greater than a second determination value, which is greater than the first determination value;

and that, when the determination means determines that the amount of NOx adsorbed in the catalyst is greater than the second determination value, the combustion mode switching means executes rich-spike control procedure when the lean combustion mode is discontinued.

5. A controller for an internal combustion engine, wherein the engine has a vacuum actuated device, which is actuated by negative pressure produced in an intake system of the engine, and a reduction occlusion type NOx catalyst located in an exhaust passage for adsorbing NOx, wherein, when a predetermined condition is satisfied during a lean combustion mode, the controller temporarily discontinues the lean combustion mode and performs stoichiometric combustion to generate the negative pressure low enough to actuate the vacuum actuated device, and wherein, when the amount of NOx adsorbed in the catalyst is greater than an acceptable value, the controller executes a rich-spike control procedure to reduce NOx adsorbed in the catalyst by temporarily switching the combustion mode, the controller being characterized by:

determination means for determining whether the amount of NOx adsorbed in the catalyst is greater than a predetermined determination value, which is smaller than the acceptable value, when the lean combustion mode is discontinued; and
combustion mode switching means for executing rich-spike control procedure when the determination means determines that the amount of NOx adsorbed in the catalyst is greater than the determination value.

6. The controller according to claim 5, characterized by that the determination means determines whether the amount of NOx adsorbed in the catalyst is greater than the determination value when the predetermined condition is satisfied during the lean combustion mode.

7. The controller according to claim 5, characterized by that the determination means determines whether the amount of NOx adsorbed in the catalyst is greater than the determination value when the predetermined condition is not satisfied.

8. The controller according to claim 7, characterized by that the determination value is a first determination value, and that, when the predetermined condition is satisfied, the determination means determines whether the amount of NOx adsorbed in the catalyst is greater than a second determination value, which is greater than the first determination value;

and that, when the determination means determines that the amount of NOx adsorbed in the catalyst is greater than the second determination value, the combustion mode switching means executes rich-spike control procedure when the lean combustion mode is discontinued.

9. A method for controlling an internal combustion engine, wherein the engine has a reduction occlusion type NOx catalyst located in an exhaust passage for adsorbing NOx, wherein a controller temporarily discontinues a lean combustion mode when a predetermined condition is satisfied during the lean combustion mode, wherein, when the amount of NOx adsorbed in the catalyst is greater than an acceptable value, the controller executes a rich-spike control procedure to reduce NOx adsorbed in the catalyst by temporarily switching the combustion mode of the engine to a rich combustion mode, the method being characterized by that:

> determining whether the amount of NOx adsorbed in the catalyst is greater than a predetermined determination value, which is smaller than the acceptable value, when the lean combustion mode is discontinued; and
> executing the rich-spike control procedure when it is determined that the amount of NOx adsorbed in the catalyst is greater than the determination value in the determining step.

10. The method according to claim 9, characterized by that, in the determining step, whether the amount of NOx adsorbed in the catalyst is greater than the determination value is determined when a predetermined condition is satisfied during the lean combustion mode.

11. The method according to claim 9, characterized by that, in the determining step, whether the amount of NOx adsorbed in the catalyst is greater than the determination value is determined when the predetermined condition is not satisfied.

12. The method according to claim 11, characterized by that the determination value is a first determination value, and that, when the predetermined condition is satisfied, whether the amount of NOx adsorbed in the catalyst is greater than a second determination value, which is greater than the first determination value, is determined;

> and that rich-spike control procedure is executed when the lean combustion mode is discontinued if the amount of NOx adsorbed in the catalyst is determined to be greater than the second determination value in the determining step.

Fig.1

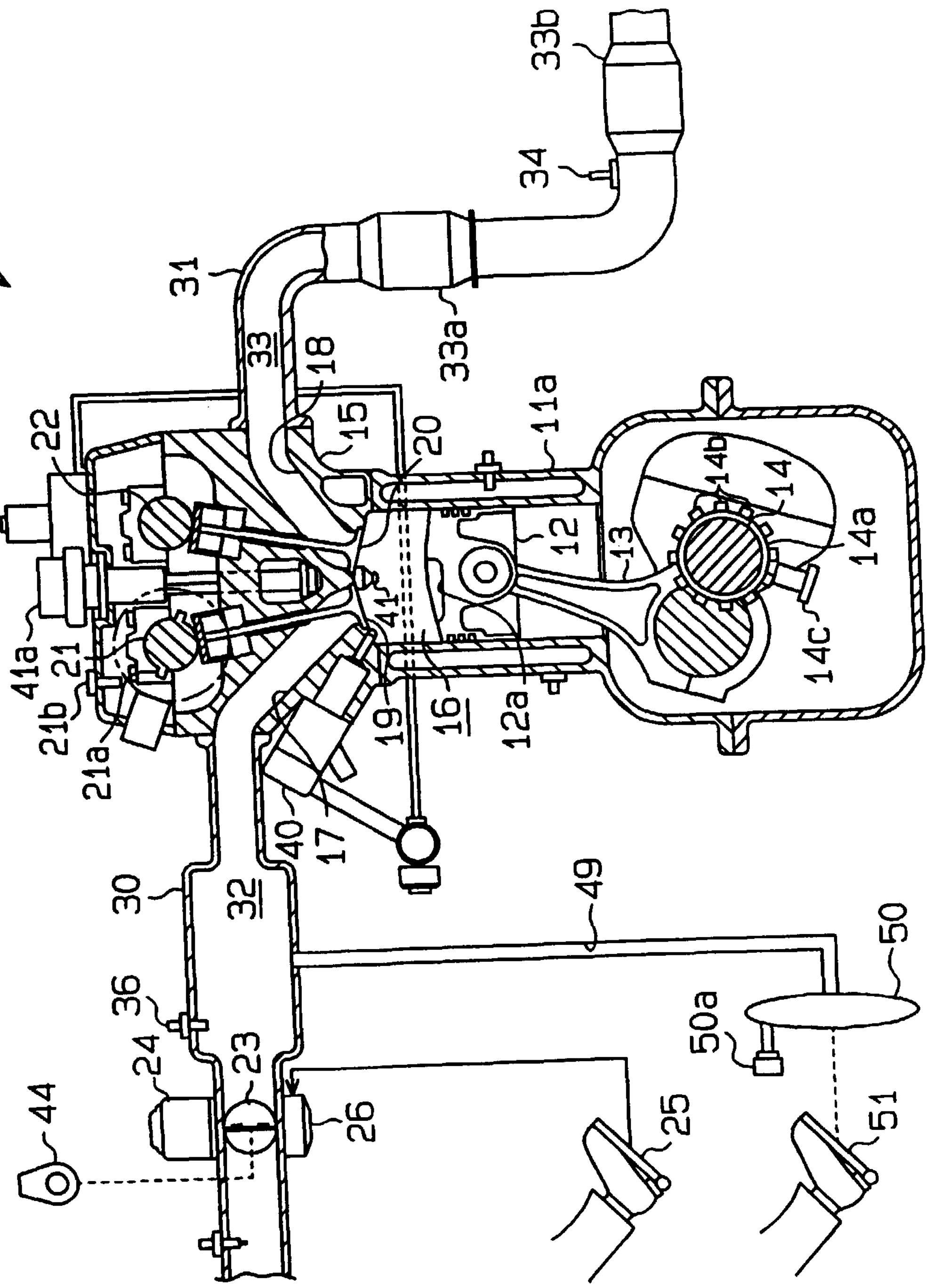
11
31
33
33a
33b
34
18
15
20
11a
14b
14
14a
12
13
22
41a
21
21b
21a
41
19
16
12a
14c
40
17
30
32
49
50
50a
36
24
23
44
26
25
51

Fig.2

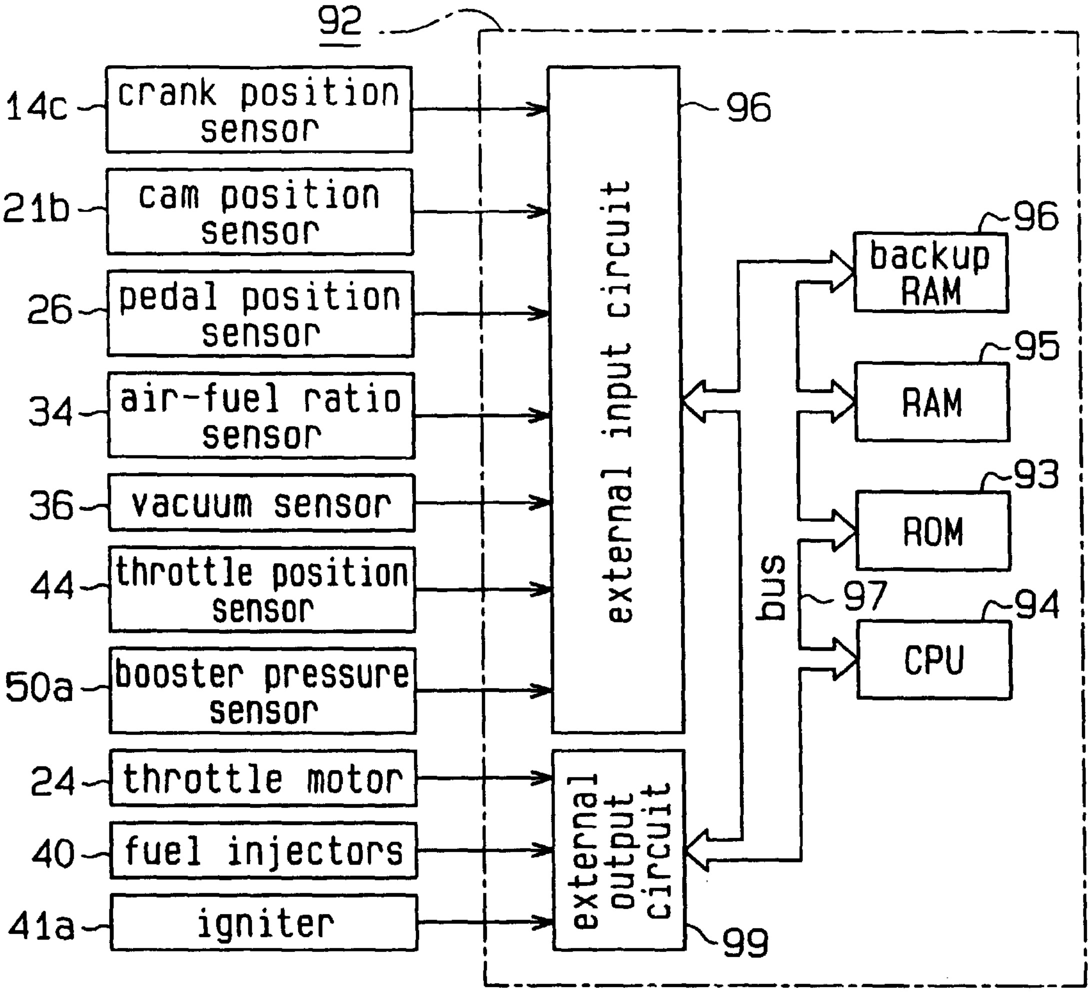
92
14c
crank position sensor
21b
cam position sensor
26
pedal position sensor
34
air-fuel ratio sensor
36
vacuum sensor
44
throttle position sensor
50a
booster pressure sensor
24
throttle motor
40
fuel injectors
41a
igniter
external input circuit
96
external output circuit
99
bus
97
backup RAM
96
RAM
95
ROM
93
CPU
94

Fig.3

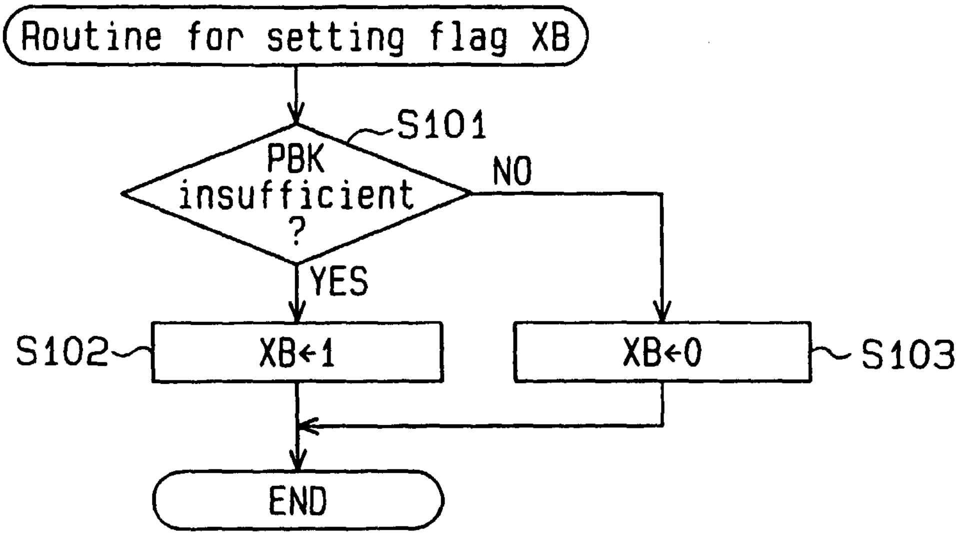
Routine for setting flag XB
PBK insufficient ?
S101
NO
YES
S102
XB←1
XB←0
S103
END

Fig.4

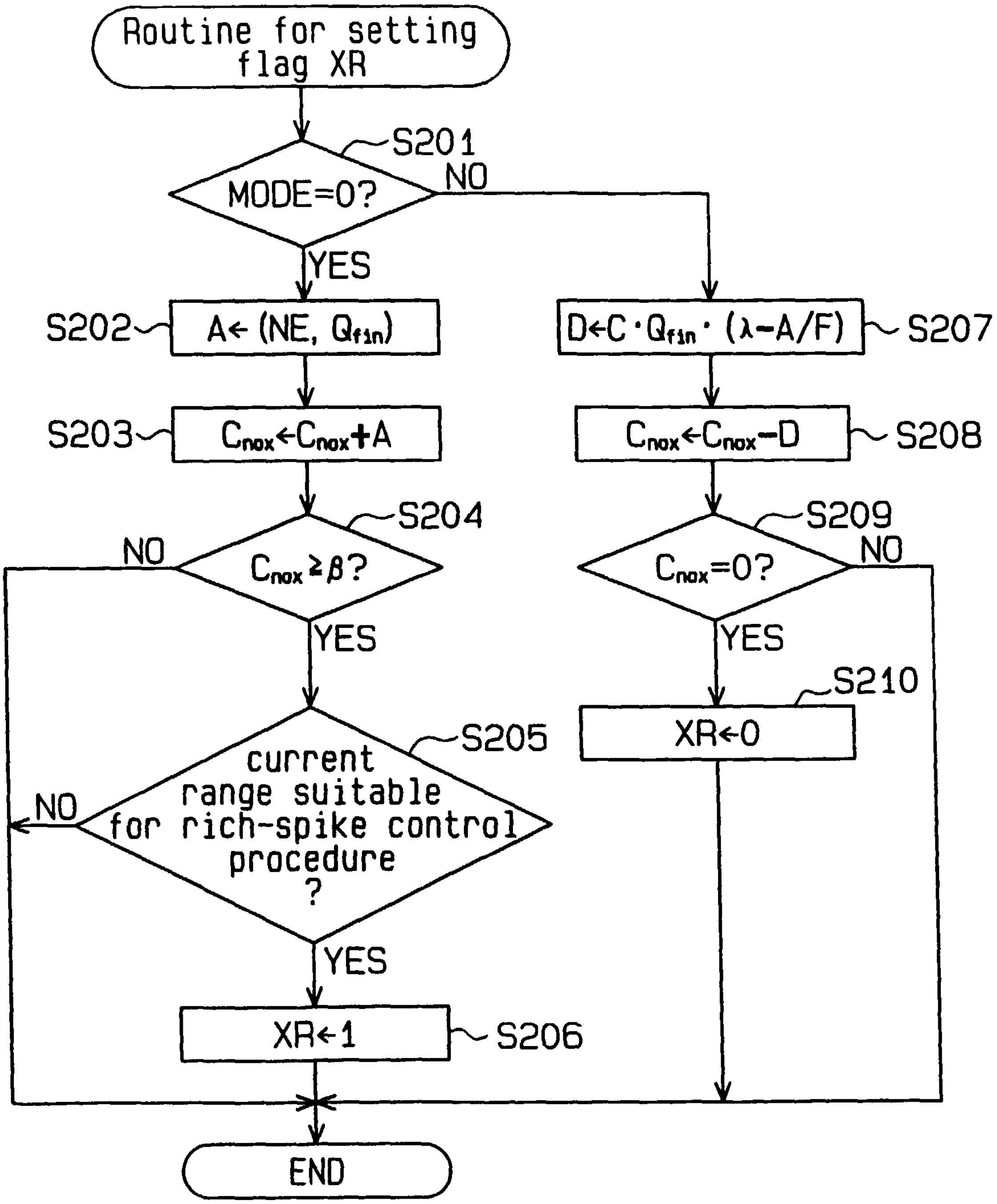
Routine for setting flag XR
S201
MODE=0?
NO
YES
S202
A← (NE, Q_{fin})
S203
C_{nox}←C_{nox}+A
S204
C_{nox}≥β?
NO
YES
S205
current range suitable for rich-spike control procedure ?
NO
YES
XR←1
S206
S207
D←C·Q_{fin}·(λ−A/F)
S208
C_{nox}←C_{nox}−D
S209
C_{nox}=0?
NO
YES
S210
XR←0
END

Fig.5(a)

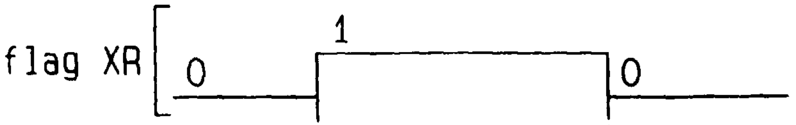

Fig.5(b)

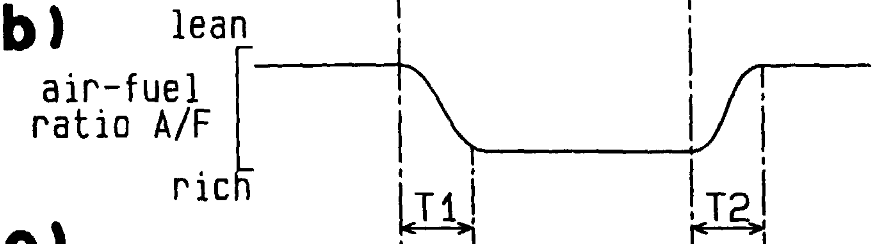

Fig.5(c)

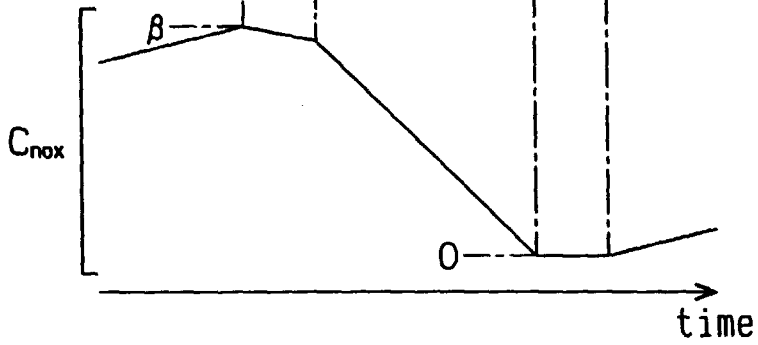

Fig.6

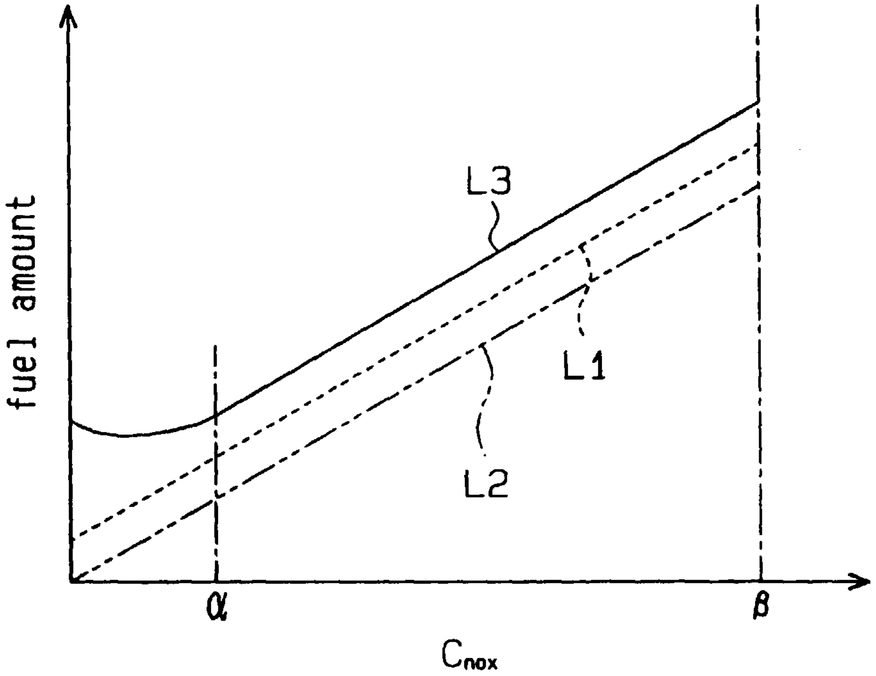

Fig.7(a)

Fig.7(b)

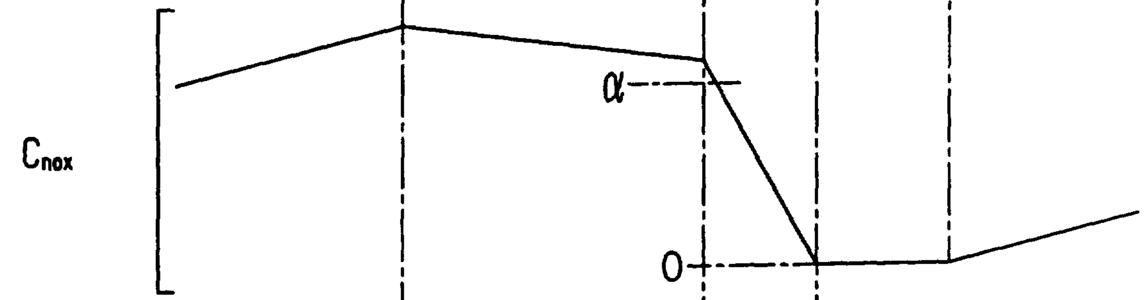

Fig.7(c)

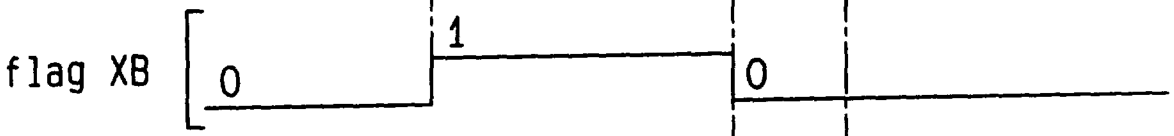

Fig.7(d)

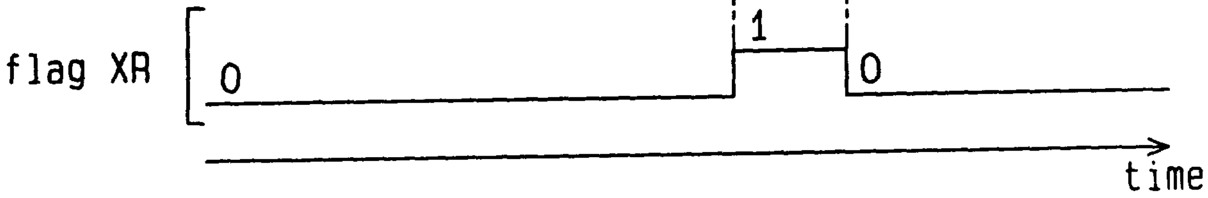

Fig.8

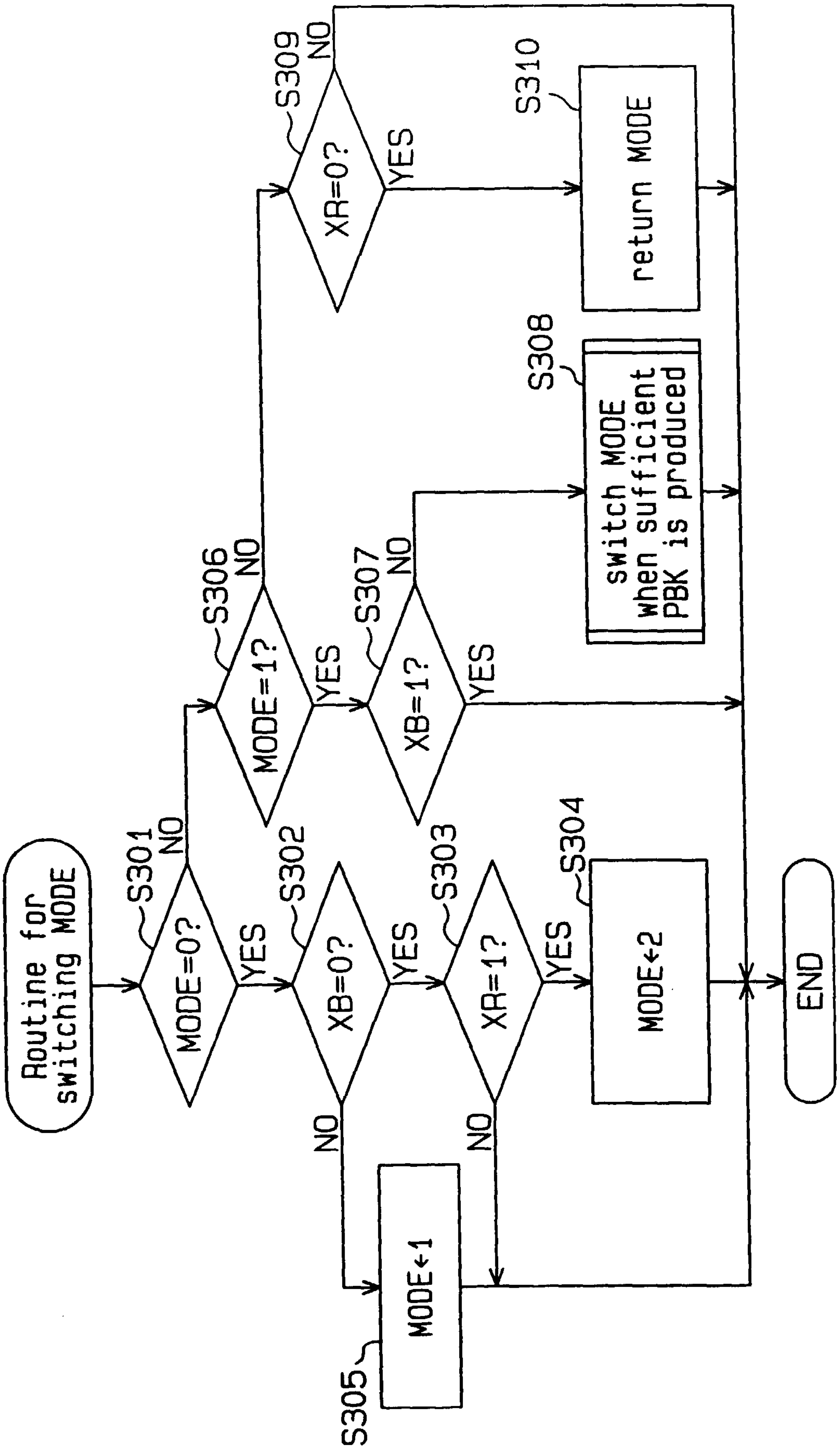
Routine for switching MODE
S301
MODE=0?
YES
NO
S302
XB=0?
YES
NO
S303
XR=1?
YES
NO
S304
MODE←2
S305
MODE←1
S306
MODE=1?
YES
NO
S307
XB=1?
YES
NO
S308
switch MODE when sufficient PBK is produced
S309
XR=0?
YES
NO
S310
return MODE
END

Fig.9

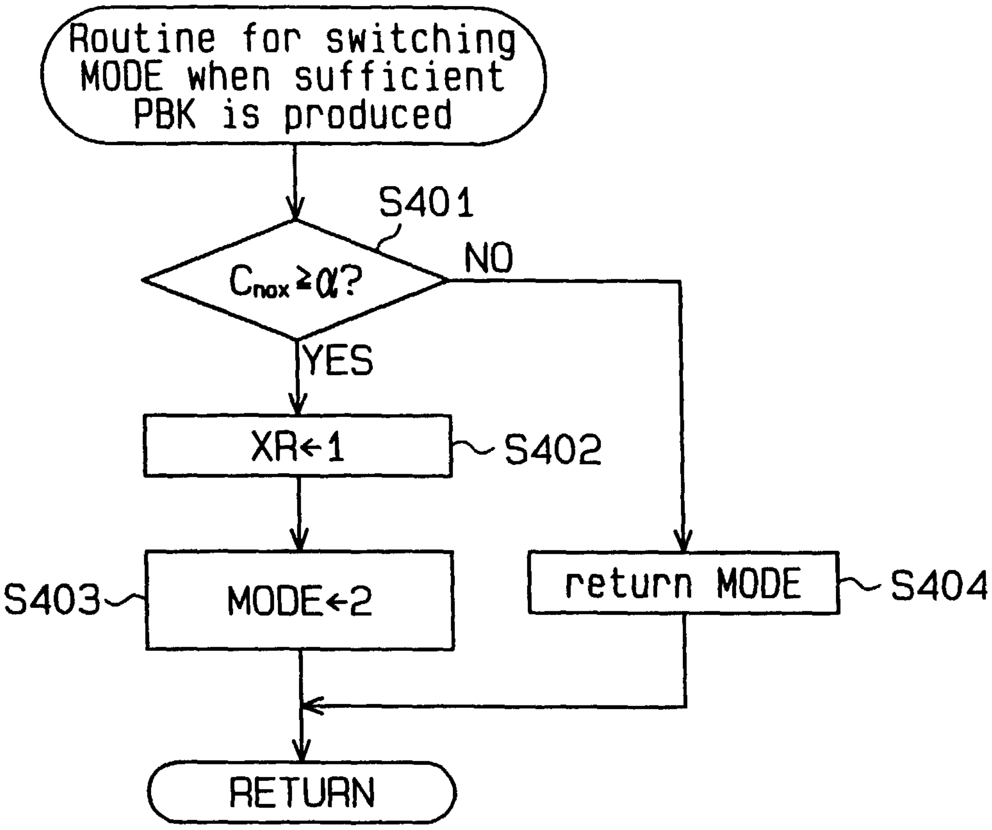
Routine for switching MODE when sufficient PBK is produced
S401
$C_{nox} \geq \alpha$?
NO
YES
XR←1
S402
S403
MODE←2
return MODE
S404
RETURN

Fig.10

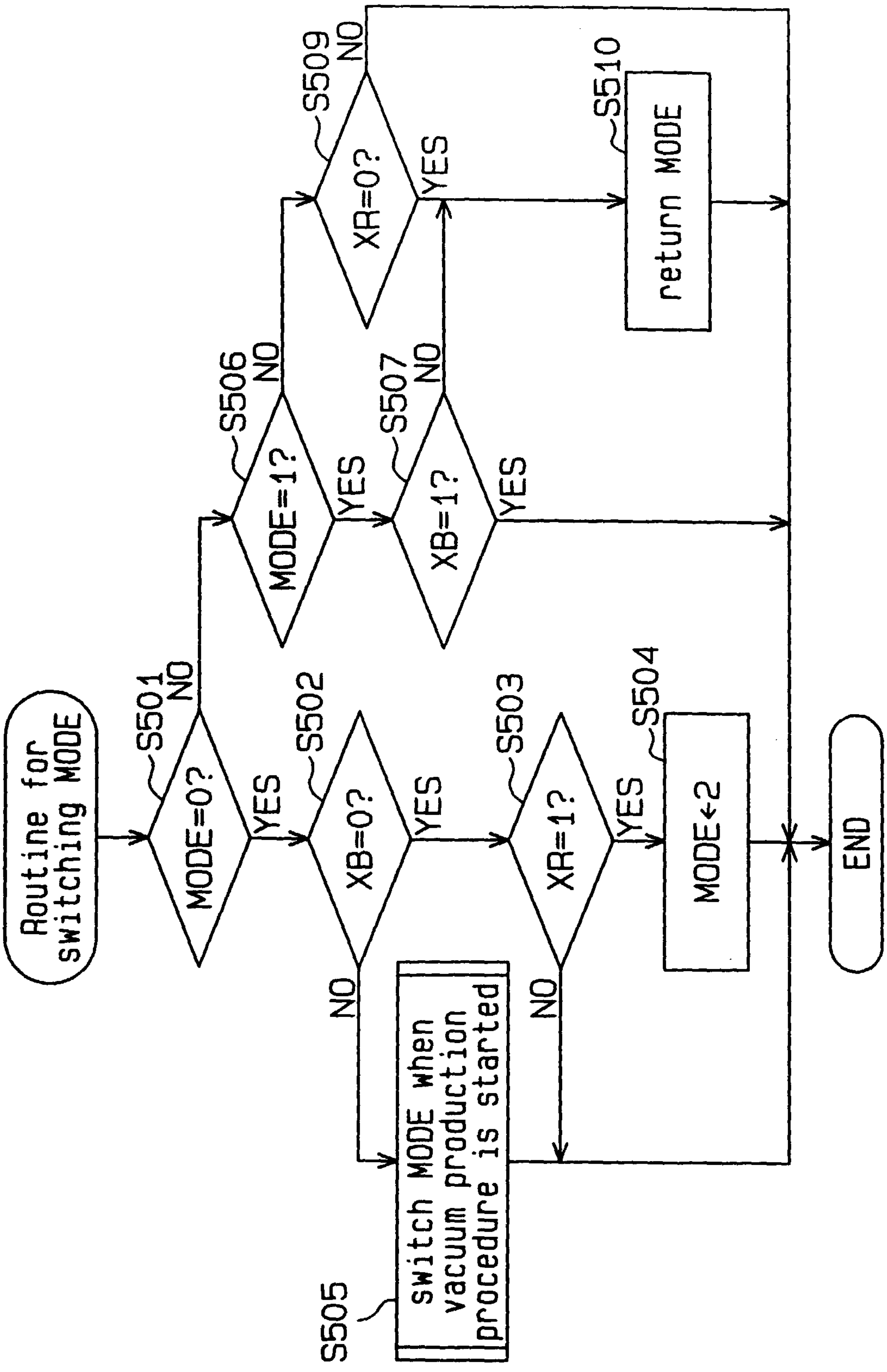
Routine for switching MODE
S501
MODE=0?
YES
NO
S502
XB=0?
YES
NO
S503
XR=1?
YES
NO
S504
MODE←2
S505
switch MODE when vacuum production procedure is started
S506
MODE=1?
YES
NO
S507
XB=1?
YES
NO
S509
XR=0?
YES
NO
S510
return MODE
END

Fig.11

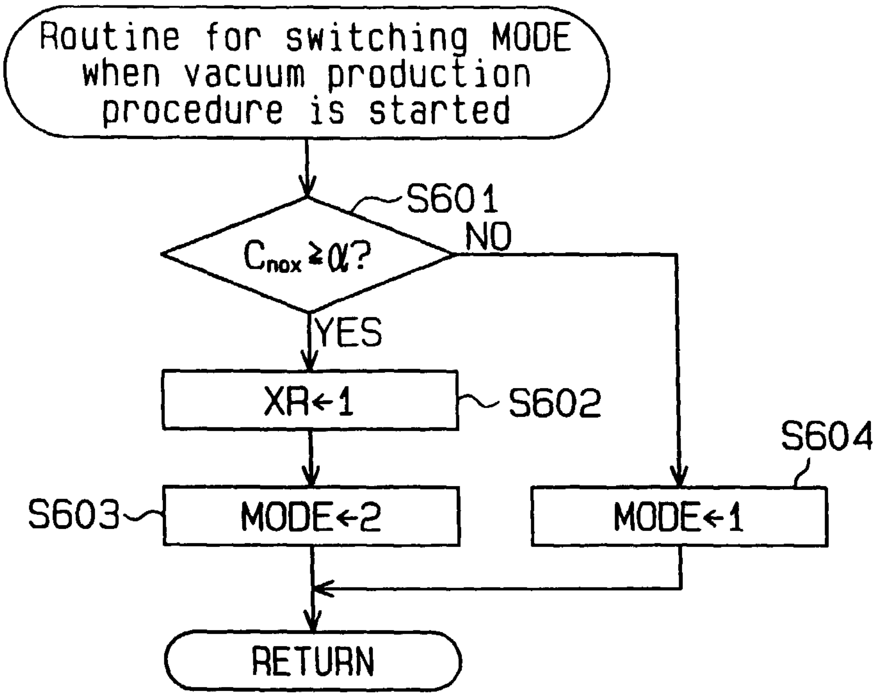

Fig.12(a)

Fig.12(b)

Fig.12(c)

Fig.12(d)

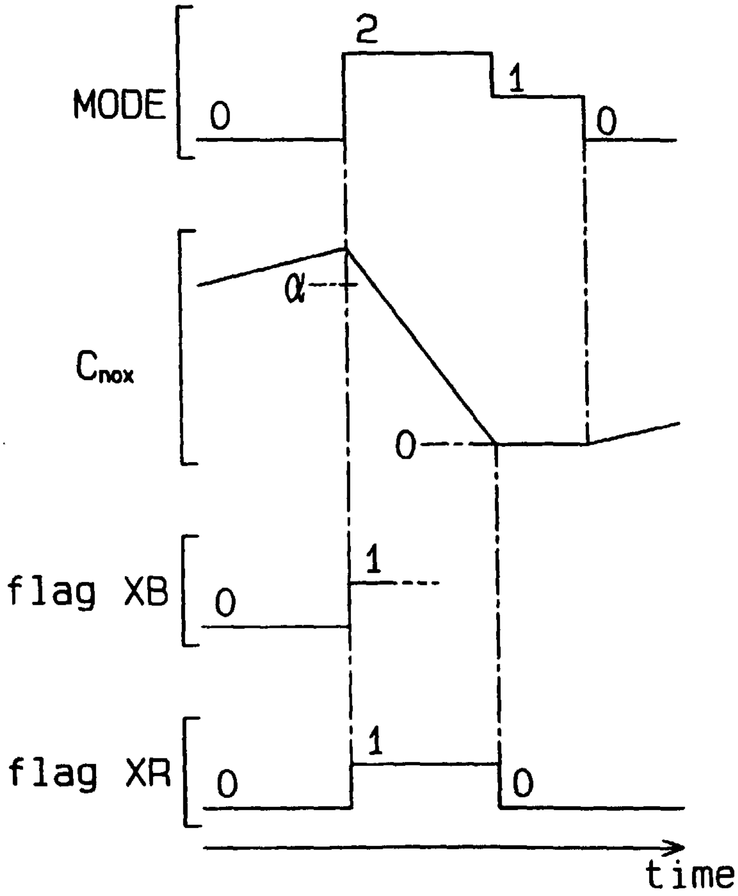

Fig.13

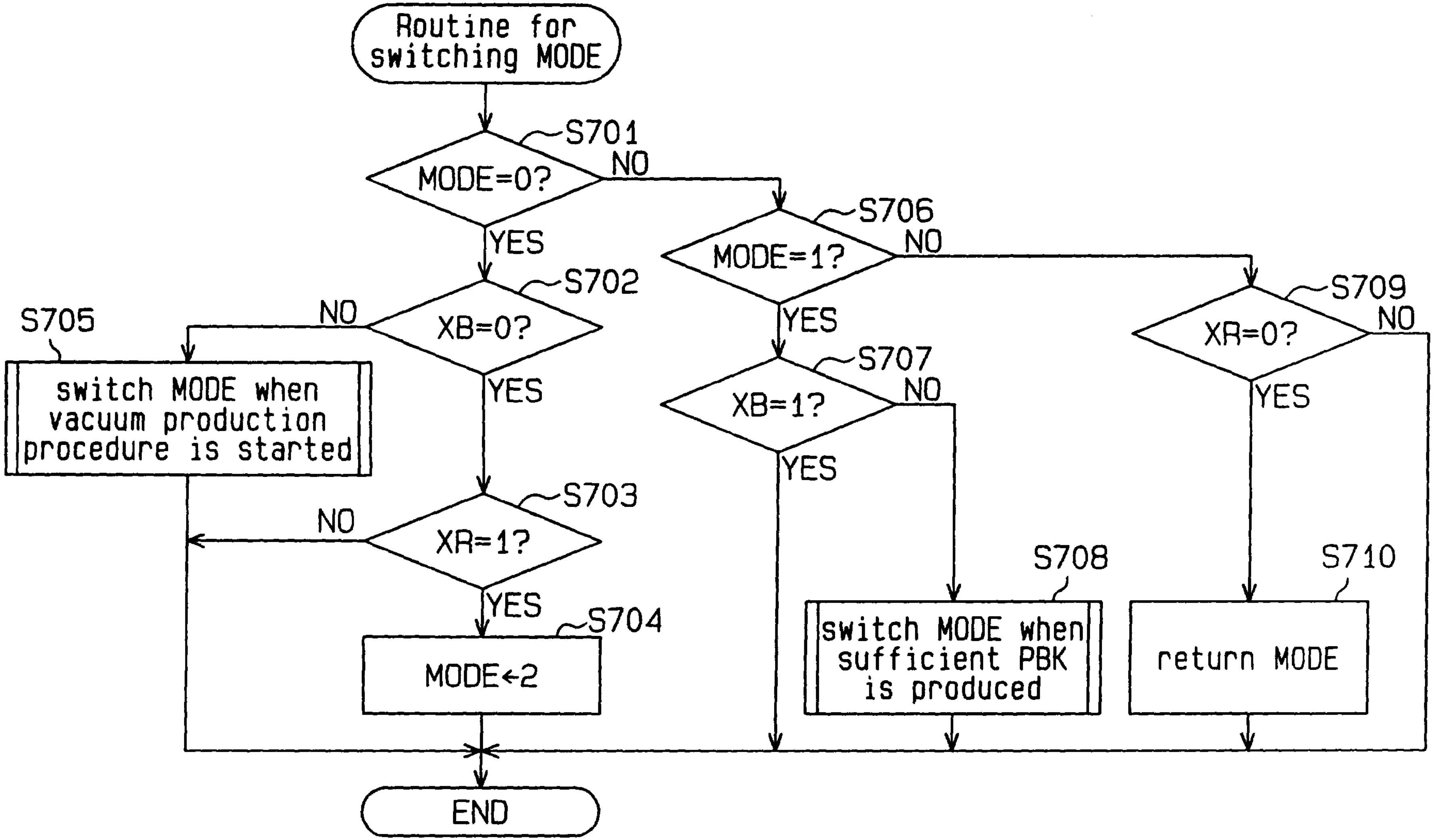
Routine for switching MODE
S701
MODE=0?
NO
YES
S702
XB=0?
NO
YES
S703
XR=1?
NO
YES
S704
MODE←2
S705
switch MODE when vacuum production procedure is started
S706
MODE=1?
NO
YES
S707
XB=1?
NO
YES
S708
switch MODE when sufficient PBK is produced
S709
XR=0?
NO
YES
S710
return MODE
END

Fig.14

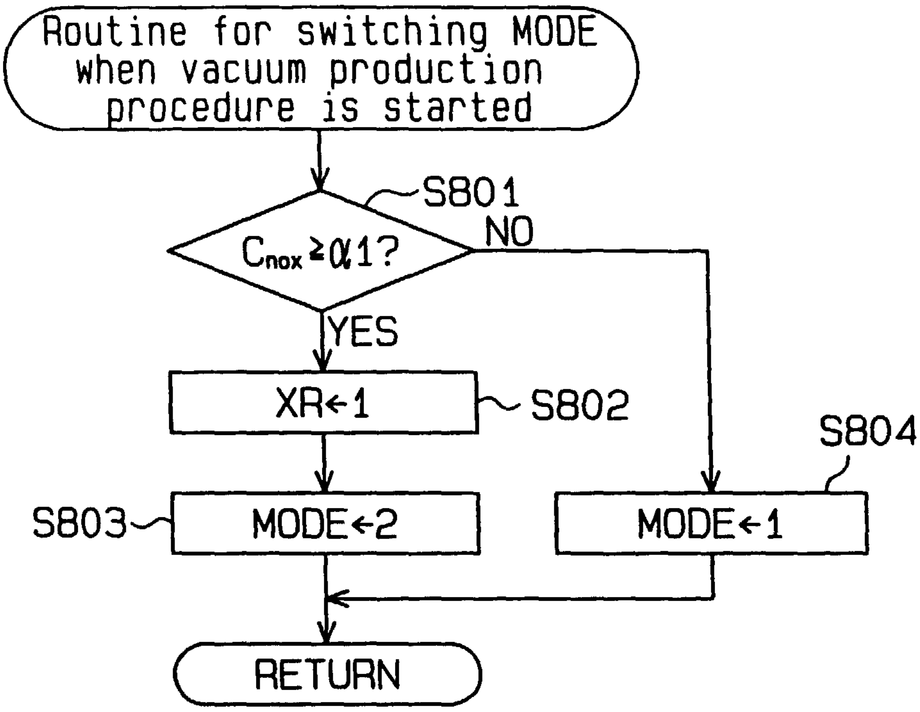
Routine for switching MODE when vacuum production procedure is started
S801
$C_{nox} \geq \alpha 1$?
NO
YES
XR←1
S802
S804
S803
MODE←2
MODE←1
RETURN

Fig.15

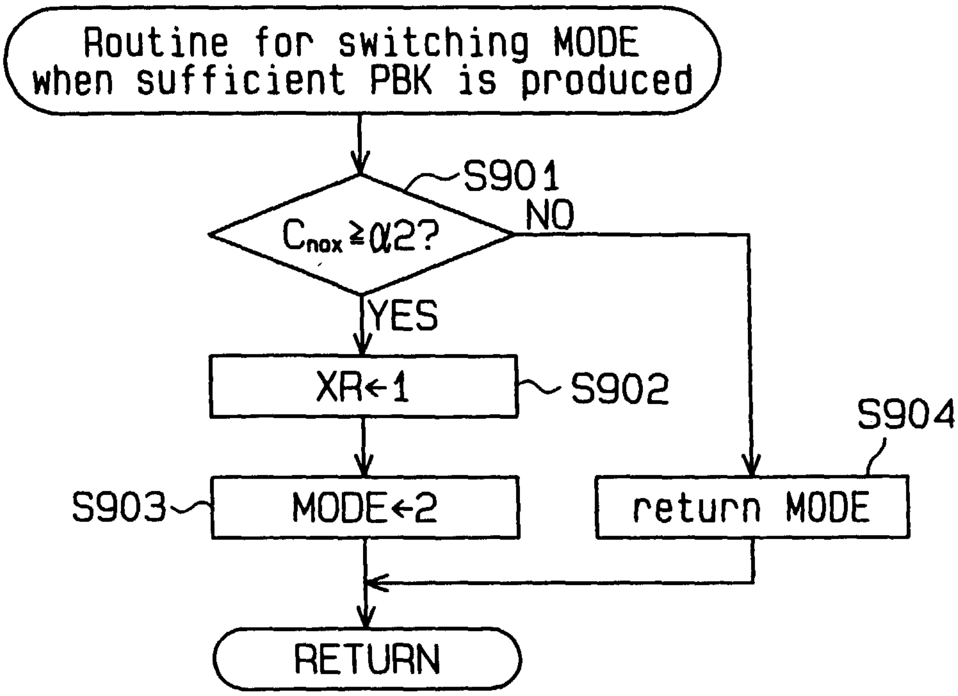
Routine for switching MODE when sufficient PBK is produced
S901
$C_{nox} \geq \alpha 2$?
NO
YES
XR←1
S902
S904
S903
MODE←2
return MODE
RETURN

Fig.16(a)

Fig.16(b)

Fig.16(c)

Fig.16(d)

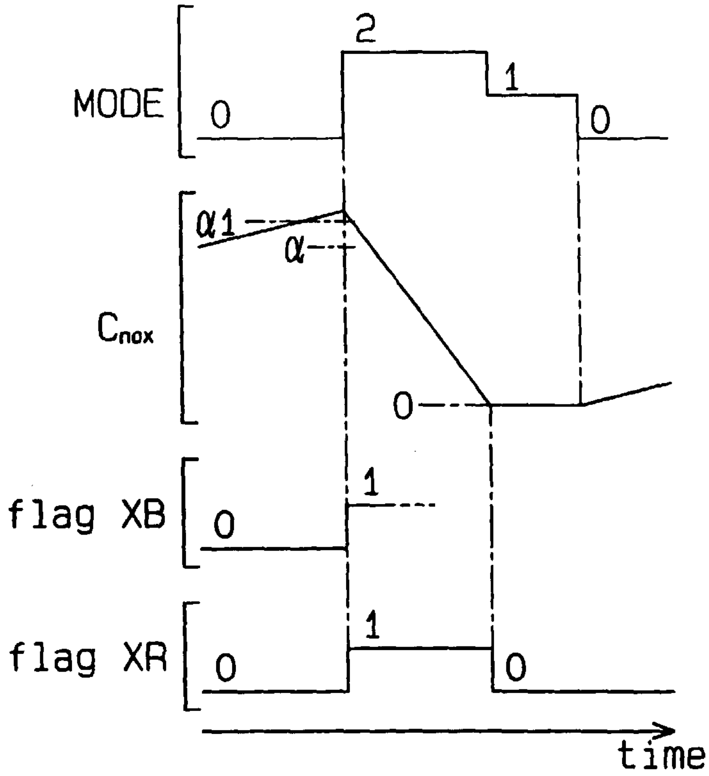

Fig.17(a)

Fig.17(b)

Fig.17(c)

Fig.17(d)