Oct. 8, 1940. A. J. SANIAL 2,216,961

SOUND TRANSLATING APPARATUS

Filed Sept. 30, 1937

FIG. 1.

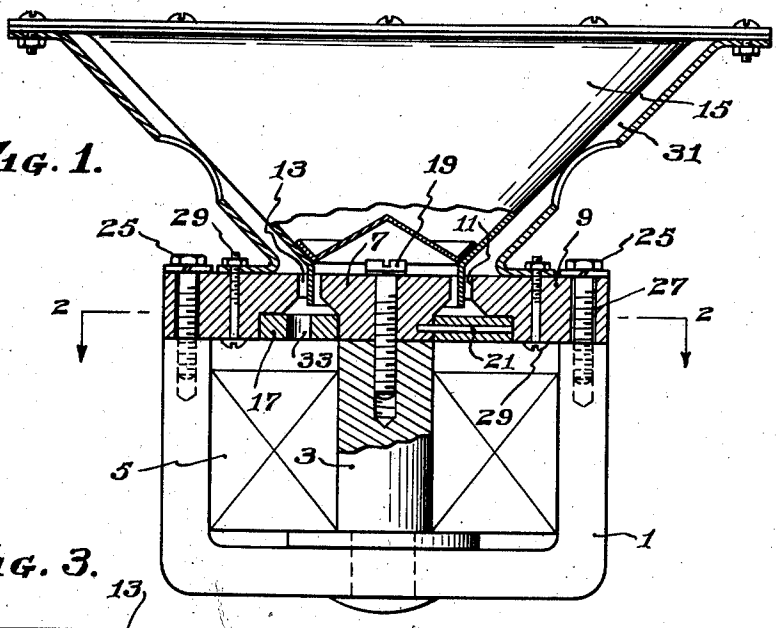

FIG. 3.

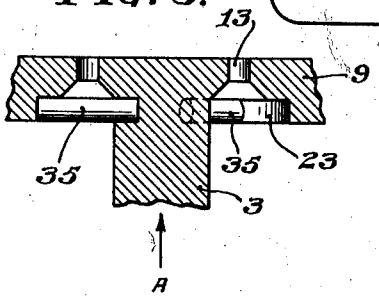

FIG. 4.

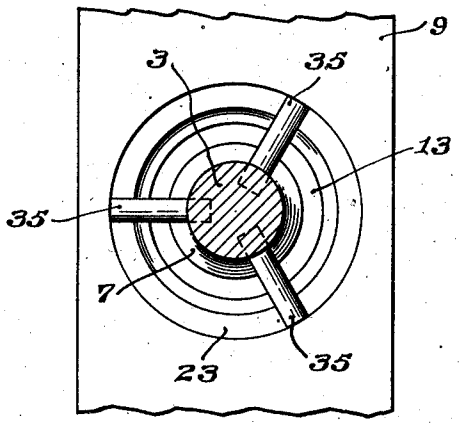

FIG. 2.

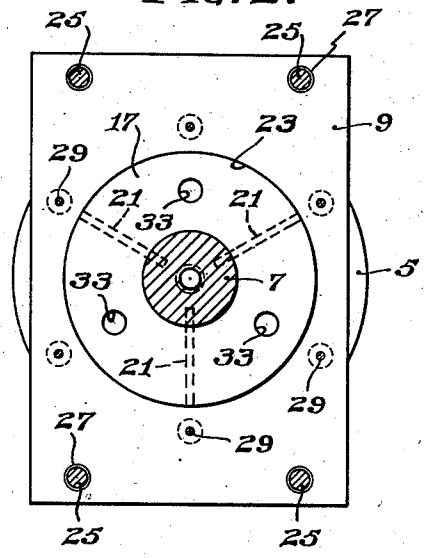

Inventor

Arthur J. Sanial

By

Attorney

Patented Oct. 8, 1940 2,216,961

UNITED STATES PATENT OFFICE

2,216,961

SOUND TRANSLATING APPARATUS

Arthur J. Sanial, Haddonfield, N. J., assignor to Radio Corporation of America, a corporation of Delaware

Application September 30, 1937, Serial No. 166,687

1 Claim. (Cl. 179—117)

This invention relates to sound translating apparatus, and more particularly to loudspeakers of the electro-dynamic type.

In loudspeakers of this type, vibration of the diaphragm is produced by the interaction of a steady magnetic field and that produced by signal currents passing through a coil movably mounted in an air gap formed between a pair of cooperating pole pieces. The steady flux or magnetic field is supplied to the pole pieces and the air gap either by a permanent magnet or a coil which surrounds one of the poles and through which a steady direct current is passed.

Conventional loudspeakers of the type under consideration usually employ a cylindrical center pole or core which is surrounded at one end by an outer pole having a circular opening in its pole piece of larger diameter than the cylindrical center pole whereby the outer pole piece is spaced from the center one to provide the necessary air gap. For best results, it is essential that the air gap be of the same dimension in all directions in which the magnetic lines of force extend and, although various means have been provided in the prior art for effecting the necessary relation between the two pole pieces for this condition to exist, they have either been inefficient or quite costly.

The primary object of my present invention is to provide, in a loudspeaker of the type set forth, an improved method of and means for assembling the pole structure which will be free from the objectionable features of most prior art methods and means designed for this purpose.

More particularly, it is an object of my present invention to provide an improved method of and means for accurately centering the outer pole piece with respect to the core or center pole piece.

Another object of my invention is to provide an improved method of assembling the field structure of an electro-dynamic loudspeaker which method readily lends itself to rapid quantity production.

Still another object of my invention is to provide improved field structure in an electro-dynamic loudspeaker wherein maximum space is afforded for the field coil.

It is also an object of my invention to provide an improved method and improved means as aforesaid which will be inexpensive, which will be highly efficient, and which may be readily availed of by even one unskilled in the art.

In accordance with my invention, I fasten either directly to the center pole or core of the magnetic structure, or upon a core cap associated therewith, a non-magnetic spacing ring and form in the under side of the yoke plate, or outer pole piece of the magnetic structure, a recess of the same diameter as the external diameter of said ring. Thus, when the yoke plate is placed on the yoke and core assembly with its recess fitted snugly around said ring, it is automatically positioned in proper relation to the core to provide a uniform air gap between the yoke plate and the core, or the yoke plate and the core cap, as the case may be. If desired, the spacing ring may be provided with one or more openings therein to act as acoustic openings or leaks.

The novel features that I consider characteristic of my invention are set forth with particularity in the appended claims. The invention itself, however, both as to its organization and method of operation, as well as additional objects and advantages thereof, will best be understood from the following description thereof, when read in connection with the accompanying drawing, in which

Figure 1 is a view partly in elevation and partly in section showing one form of my invention,

Figure 2 is a view partly in plan and partly in section taken along the line 2—2 of Fig. 1,

Figure 3 is a sectional detail view of a modified form of my invention, and

Figure 4 is a bottom plan view of the structure of Fig. 3, looking in the direction of the arrow A.

Referring more particularly to the drawing, wherein similar reference characters indicate corresponding parts throughout, there is shown in Figs. 1 and 2, a yoke 1 of magnetic material which constitutes an outer pole to which is secured a cylindrical core, or center pole, 3 also of magnetic material, a conductive coil 5 surrounding the core 3 and serving to establish a magnetic field in well known manner. To the free, or upper, end of the core 3 is secured a circular core cap 7 of magnetic material, while a yoke plate 9, also of magnetic material and having a circular opening 11 formed therein, is supported on the yoke 1 in a position such that the cap 7 extends into the opening 11. The core cap 7 and the yoke plate 9 constitute, respectively, inner and outer pole pieces of the magnetic structure described and the dimensions of the cap 7 and the opening 11 are such that an air gap 13 is provided within which the voice coil (not shown) of a diaphragm or cone 15 operates.

In order to accurately center the yoke plate 9

with respect to the core cap 7 so as to provide an air gap of uniform radial dimension throughout, an annular spacing ring 17 is snugly fitted over the relatively accurately formed cylindrical surface at the lower and reduced end of the core cap 7, after which the cap 7 is secured to the core 3, as by means of a screw 19. The spacing ring 17 is secured to the cap 7 in a position to be effective in a radial direction with respect to the cap 7, and it is preferably secured to the cap 7 by means of a plurality of pins 21, each frictionally forced through the ring 17 and into the cap 7 in a substantially radial direction. The ring 7 has an external diameter larger than the diameter of the opening 11, and a circular recess 23 is formed in the bottom surface of the yoke plate 9 on the same diameter as the external diameter of the ring 17, whereby the recess 23 will snugly receive the ring 17. When, therefore, the yoke plate 9 is fitted onto the ring 17, it is automatically brought into the desired relation with the core cap 7.

The recess 23 is formed to a depth such that, when the yoke plate 9 is in adjusted position, the lower surface of the ring 17 will be flush with the lower surface of the yoke plate. This affords a maximum space between the yoke plate 9 and the bottom of the yoke 1 for the field coil 5. After the yoke plate 9 has been located as above described, it is secured to the yoke 1 by any suitable means, as by a plurality of screws 25 which pass freely through openings 27 in the yoke plate 17. The openings 27 are made of larger diameter than the screws 25 to permit adjustment of the yoke plate 17 relative to the threaded holes in the yoke 1 which receive the screws 23. Preferably, although not necessarily, the diaphragm 15 is secured in cooperative relation to the pole pieces 7 and 9 by means of a plurality of nuts and bolts 29 which secure the supporting frame or dish pan 31 of the diaphragm to the yoke plate 9. By first securing the diaphragm assembly to the yoke plate 9 by means of the bolts 29 and the diaphragm 31, and then fitting the yoke plate 9 onto the spacing ring 17, in the manner above described, the voice coil is automatically correctly located in the air gap. A plurality of openings 33 may be provided in the spacing ring 17 to provide acoustic paths or passages for vibrations set up by the rear surface of the diaphragm 15.

In the modification of my invention shown in Figs. 3 and 4, I employ a plurality of non-magnetic spacing pins 35 in place of the annular spacing ring 17. The pins 35 may be frictionally inserted into suitable openings in the core 3 instead of in a separate core gap, as in the modification of Figs. 1 and 2, or they may be inserted into the core cap 7, if desired. Preferably, the pins 35 are inserted into the core 3 in a substantially radial direction and are spaced substantially uniformly circumferentially about the core, each of them extending the same radial distance from the axis of the core, so that their extreme outer ends will lie upon a circle corresponding to the external diameter of the spacing ring 21. The recess 23 is formed in the lower surface of the yoke plate 9, as in the modification previously described, and snugly receives the free ends of the pins 35 whereby to accurately locate the yoke plate 9 with respect to the core 3.

From the foregoing description, it will be apparent to those skilled in the art that I have provided a very simple method of and means for quickly and accurately centering the yoke plate, or outer pole piece, with respect to the center pole piece, or core, of the magnetic structure. The arrangement is such that the core 3 need not be accurately centered on the yoke 1, nor does the core cap 7 have to be accurately located in axial alignment with the core 3, since the openings 27 permit adjustment of the yoke plate 9 relative to the yoke 1 even after the yoke plate 9 has been properly centered or located with respect to the core cap 7. Moreover, the arrangement is such that even one not skilled in the art may readily and accurately make the assembly, the use of the pins 21 and 35, which frictionally fit into the core cap 7, or the core 3, as the case may be, facilitating rapid assembly. It is to be understood, however, that any other suitable means may be employed for securing either the spacing ring 17 or the spacing pins 35 to their supports. It will also be obvious that the ring 17 and the pins 35 may be secured to the yoke plate 9 instead of as previously described and shown in the drawing. Moreover, it should be obvious to those skilled in the art that the ring 17 and the recess 23 need not necessarily be circular, but may be of any other configuration desired, provided the two match each other, so that proper location of the yoke plate 9 with respect to the center pole piece is insured. Similarly, in the modification shown in Figs. 3 and 4, instead of the circular recess 23, a plurality of circumferentially spaced recesses may be provided in the lower surface of the yoke plate 9 for receiving the free ends of the spacing pins 35. Other changes will, no doubt, readily suggest themselves to those skilled in the art. I therefore desire that my invention shall not be limited except insofar as is made necessary by the prior art and by the spirit of the appended claim.

I claim as my invention:

In an electrodynamic loudspeaker, the combination of a yoke of magnetic material, a core of magnetic material secured thereto, a conductive coil surrounding said core, a core cap of magnetic material secured to said core and constituting an inner pole piece, a yoke plate of magnetic material on said yoke having an opening therein, said core extending into said opening whereby said yoke plate embraces said core cap and constitutes an outer pole piece, a non-magnetic annular spacing ring snugly fitted onto said core cap, a plurality of radially extending pins passing through said ring and into said core cap for securing said ring to said core cap, said yoke plate having an annular recess in the lower surface thereof snugly receiving said ring whereby said ring spaces said pole pieces from each other to provide a predetermined air gap, and means for securing said yoke plate to said yoke in the position relative to said core determined by said spacing ring.

ARTHUR J. SANIAL.