W. FERRIER.

CENTERING DEVICE FOR FORGING PRESSES.

APPLICATION FILED DEC. 29, 1910.

1,036,206. Patented Aug. 20, 1912.

2 SHEETS—SHEET 1.

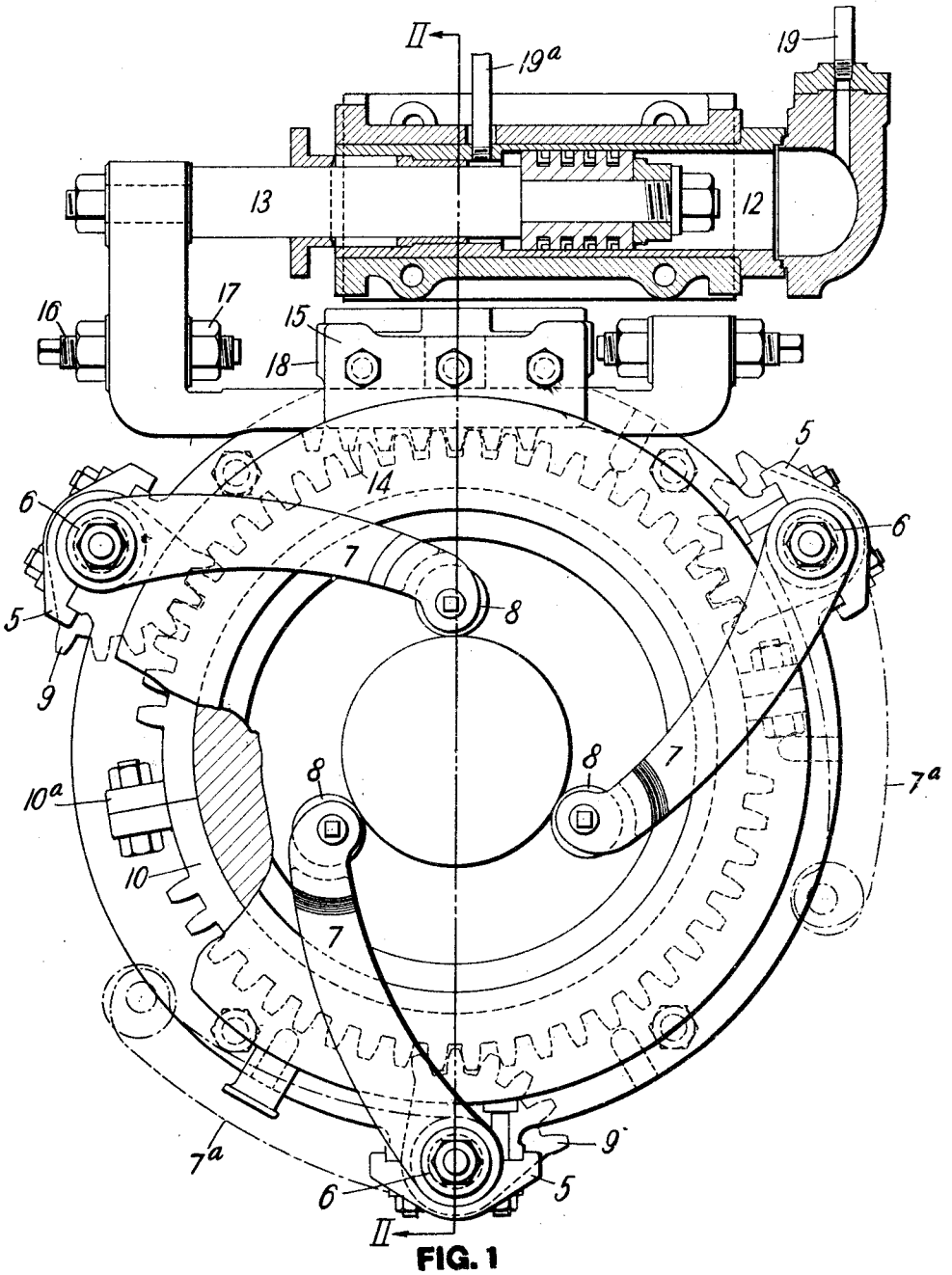

FIG. 1

WITNESSES

R. D. Little

Chas. Fosterman

INVENTOR

Walter Ferrier

by Smithsonian Belt & Fuller

his Attorneys

W. FERRIER.

CENTERING DEVICE FOR FORGING PRESSES.

APPLICATION FILED DEC. 29, 1910.

1,036,206. Patented Aug. 20, 1912.

2 SHEETS—SHEET 2.

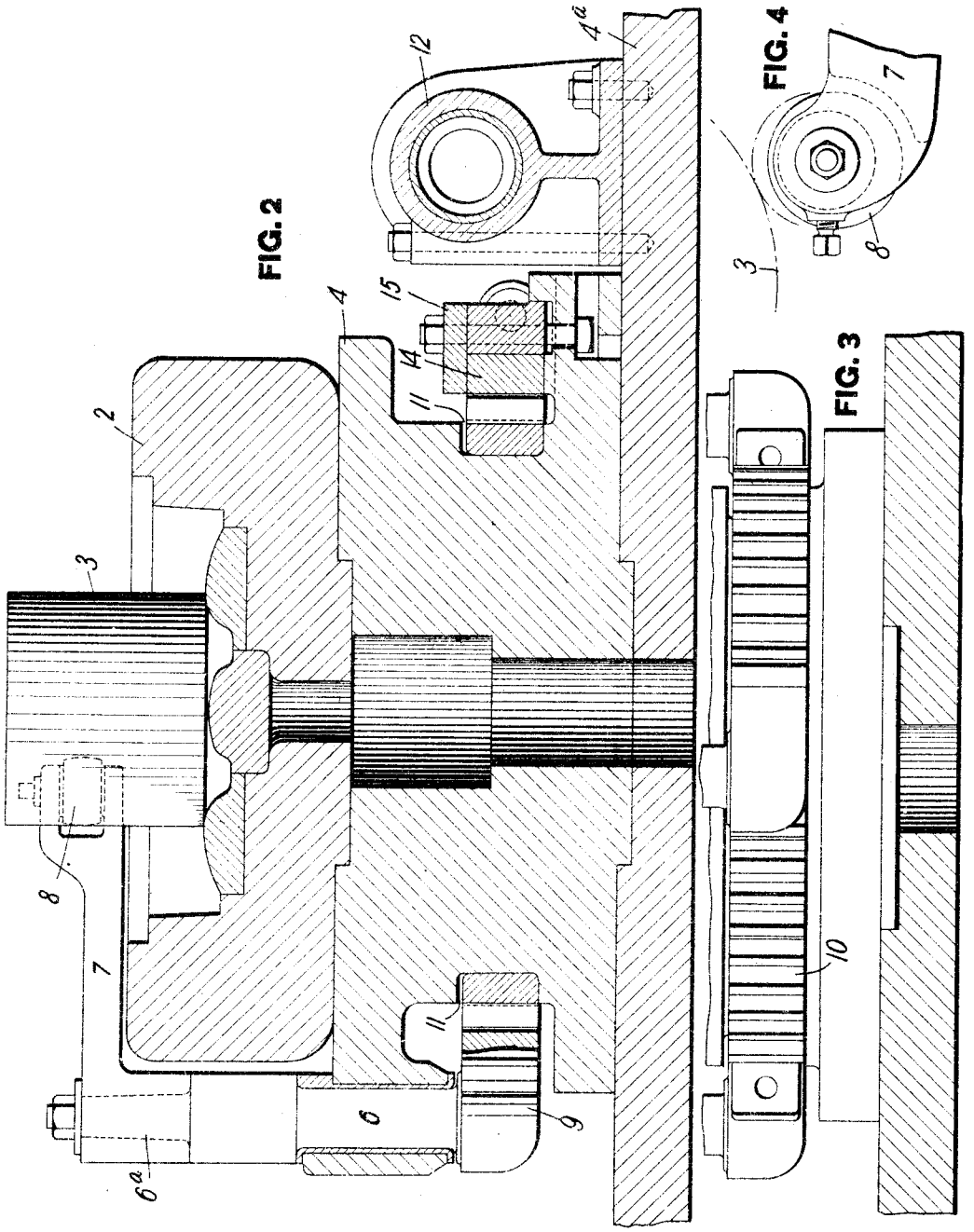

WITNESSES

R D Little

Chas. Soderman

INVENTOR

Walter Ferrier

by Lunthicum Belt & Fuller

his Attorneys

UNITED STATES PATENT OFFICE.

WALTER FERRIER, OF GARY, INDIANA.

CENTERING DEVICE FOR FORGING-PRESSES.

1,036,206. Specification of Letters Patent. Patented Aug. 20, 1912.

Application filed December 29, 1910. Serial No. 599,858.

To all whom it may concern:

Be it known that I, WALTER FERRIER, of Gary, in the county of Lake and State of Indiana, have invented certain new and useful Improvements in Centering Devices for Forging-Presses, of which the following is a full, clear, and exact description, reference being had to the accompanying drawings forming part of this specification.

My invention relates to the construction and arrangement of apparatus for centering metal blanks upon the face of the bottom anvil or forging die of a forging press or hammer, and more particularly to apparatus by which cylindrical wheel blanks are moved sidewise upon the face of the bottom die of a car wheel forging press to accurately center the blanks relative to the dies preparatory to the later forging operation or operations by which such blanks are formed into forged steel car wheels or similar articles. Heretofore such articles have been "centered" ordinarily by hand, the accuracy of such centering operations necessarily depending upon the eye and skill of the operator. When centered in this manner, it is frequently found that the blanks have been placed with their vertical axes out of line with the vertical axis of the dies to such an extent that in the later forging operations the metal is displaced unevenly so as to cause a lap to form on one side of the blank and cause a lack of material on the diametrically opposite side of the center of the blank. This method of centering the blanks in the dies is the cause of frequent delays in the forging operations and often results in the making of defective wheels and an unavoidable increase in the cost of such wheels.

One object of my invention is to provide apparatus for centering such blanks of novel construction having improved means for mechanically moving the blanks sidewise upon the face of the supporting die so as to bring the axial center of the blank and dies into alinement and to provide improved mechanism for operating the centering device so as to move the blanks into a central position upon the face of the supporting die.

Another object of this invention is to provide a centering device constructed and arranged as more fully described in the specification and pointed out in the claims.

Referring to the drawings, Figure 1 is a plan showing a centering device as constructed and arranged and as applied for use on the bottom anvil or forming die of a car wheel forging press. Fig. 2 is a sectional elevation of the same taken on the line II—II of Fig. 1. Fig. 3 is a detail elevation showing the annular gear which surrounds the bottom die, and forms part of the actuating mechanism for the pivoted arms of the centering device. Fig. 4 is a detail plan on a larger scale showing the construction of the anti-friction rollers on the ends of the pivoted arms.

In the drawings, 2 designates the bottom die of a forging press having a cylindrical wheel blank 3 mounted thereon in centered position in readiness for the forging operation. The die 2 is supported by a bottom anvil 4 forming part of the forging press. The die 2 is removably secured in place on the bottom anvil 4 to permit of dies of various sizes and different contours, found necessary in making a variety of wheels, being successively used on the forging press.

Mounted in bearings 5 at separated points on the periphery of the bottom anvil 4 of the forging press are vertically extending shafts 6, and secured by one end to the squared portions 6^a of these shafts are the swinging arms 7 by which the blanks are mechanically moved sidewise so as to bring the axial center of the blank into alinement with the axial center of the forging die 2. The other ends of the arms 7 are provided with anti-friction rollers 8 which contact with the periphery of the blank in moving the blank into a central position in the die recess. The lower ends of the shafts 6 are provided with mutilated gears 9 having teeth which mesh with the teeth of the annular gear 10 which encircles the bottom die 4 of the forging press. The bottom die 4 is provided with an annular recess 11 in which the gear 10 is placed, this gear being made in sections and provided with flanges 10^a by which the two sections are secured together in place.

Secured to an extension 4^c on the bottom anvil 4 is a double acting fluid pressure cylinder 12, which is provided with a piston 13 having one end connected to the rack 14 which is mounted in the guide or support 15 which also is secured on the extension 4^c of the bottom anvil 4 and the teeth of this rack mesh with the teeth of the annular gear 10. The ends of the rack 14 are provided with adjusting screws 16 which by engagement with the stops 18 on the ends of the rack

guide or support 15 regulate and control the stroke of the rack and through the connecting mechanism the amount of movement of the centering arms 7. Lock nuts 17 are provided on each screw 16 to secure and maintain the screws in their adjusted position. The inlet openings on the opposite ends of the fluid pressure cylinder 12 are connected by means of supply pipes 19 and 19ª through a suitable operating valve with a source of fluid pressure supply by which the piston of the cylinder is actuated to move the swinging arms 7 into and out of their operative position. In the drawings the blank is shown in its centered position with the axis of the blank and die in alinement and with the rollers 8 on the arms 7 in engagement with the blank in the position assumed in centering the blank.

In the operation of my improved apparatus the blank is placed in the die recess or upon the face of the forging die by means of tongs or other suitable mechanism being placed in an approximately central position. Fluid pressure is then admitted through the pipe 19 into the cylinder 12 so as to cause the piston 13 to move into the position shown in Fig. 1. When the piston is advancing into this position the annular rack 10 is caused to rotate through a part of a revolution and through the mutilated gears 9 and shafts 6 cause the arms 7 to move in unison toward a common center corresponding to the axial center of the bottom die 2 and anvil 4. In such movement one or more of the arms 7 is brought into contact with the periphery of and moves the blank 3 sidewise until all of the anti-friction rollers 8 are in contact with the periphery of the blank. When all of the arms are brought into contact with the blank the blank will have been shifted sidewise upon the face of the die until the axial centers of the blank and the forging die coincide and are in vertical alinement. Fluid pressure is then admitted to the pipe 19ª connected to the inlet on the other end of the cylinder 12 and the piston 13 is moved from the position shown until the end of the adjusting screw 16 is in engagement with the stop 18 on one end of the rack guide. When the piston has moved the rack so as to bring this adjusting screw into engagement with the stop 18 all of the arms 7 will have been swung outwardly until they occupy the relative position shown dotted by 7ª, 7ª, which is out of the path of the descending top die of the forging press. The top die is then caused to descend to carry out the forging operations and the forming of the blank in the die 2 into a wheel completed, and the above described operations are repeated from time to time as often as required with successive blanks in forging the blanks into wheels or other articles being formed.

The advantages of my invention will be apparent to those skilled in the art. The apparatus is simple and is easily kept in repair. By its use the blanks are mechanically moved by power means so as to be accurately centered in the recess or on the face of the forging die and the making of defective wheels due to inaccurate centering is avoided and overcome. The provision of the power cylinder for operating the centering arms of the centering device insures that the blanks will be quickly and accurately centered in position for the forging operation and delays caused by the shifting back and forth found necessary to even approximately center the blanks manually are overcome and avoided. By providing the stops and adjusting screws the amount of movement given the outer end of the pivoted arms 7 can be regulated and adjusted to suit blanks of various diameters or widths.

While I have described my invention as applied to a hydraulic forging press, obviously it is equally applicable to a steam hammer or other type of forging apparatus and is adapted for use in centering blanks formed into articles other than forged car wheels.

Modifications in the construction and arrangement of the parts may be made without departing from my invention as defined in the appended claims.

I claim:—

1. In a forging press, a centering device having a plurality of pivoted arms located at separated points about the periphery of the bottom die face of said press and arranged to swing into and out of engagement with a blank placed upon said die face in moving the blank into vertical axial alinement with the die face, shafts to which said arms are secured having a mutilated spur gear wheel on one end thereof, a gear wheel having teeth meshing with the teeth of said mutilated gears, and power means for oscillating the gear to move the arms into and out of engagement with the blanks.

2. In a forging press, a centering device having a plurality of pivoted arms located at separated points about the periphery of the bottom die face of said press and arranged to swing into and out of engagement with a blank placed upon said die face in moving the blank into vertical axial alinement with the die face, shafts to which said arms are secured having a mutilated gear wheel on one end thereof, an annular gear wheel encircling the die of said press having teeth meshing with the teeth of said mutilated gear wheels, a rack having teeth meshing with the teeth of said annular gear wheel for actuating said wheel, and a fluid pressure cylinder for operating the rack.

3. In a forging press, a centering device having a plurality of pivoted arms located

at separated points about the periphery of the bottom die face of said press and arranged to swing into engagement with a blank placed upon said die face in moving said blank into vertical axial alinement with the die face, shafts to which said arms are secured having a mutilated gear wheel on one end thereof, an annular gear wheel encircling the die of said press having teeth meshing with the teeth of said mutilated gear wheels, a rack having teeth meshing with the teeth of said annular gear wheel for actuating said gear wheel, and means on said rack for adjusting its stroke to vary the range of movement of the rack and said arms.

4. In a forging press, a blank centering device comprising in combination a plurality of swinging arms having one end thereof arranged to contact with and move a blank sidewise into vertical axial alinement with the die face of said forging press, means for swinging said arms simultaneously through arcs of equal extent, power means for actuating said arm moving means, and adjusting means whereby the movement of said power means is adjusted to vary the arc of movement of said arms.

5. In a forging press, a centering device comprising in combination movable arms adapted to engage with a blank placed upon the bottom die of said forging press to move the blank sidewise into axial alinement with said die, mechanism for actuating said arms in unison to move the blank, power means operatively connected to and actuating said arm moving mechanism, a stop, and adjusting mechanism on said power means engaging with said stop to limit the movement of said said power means and arm moving mechanism.

In testimony whereof, I have hereunto set my hand.

WALTER FERRIER.

Witnesses:
W. H. Bailey,
V. Portinlr.