(No Model.) 2 Sheets—Sheet 1.

F. L. SAUTTER.

ELECTRIC ARC LAMP.

No. 456,598. Patented July 28, 1891.

Fig. 1.

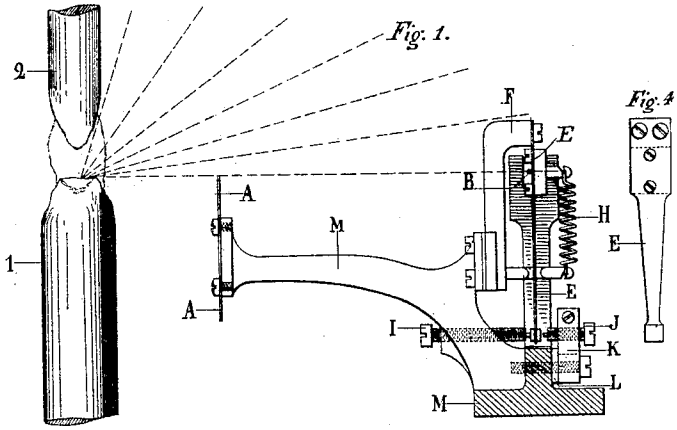

Fig. 4

Fig. 5.

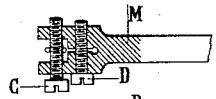

Fig. 3.

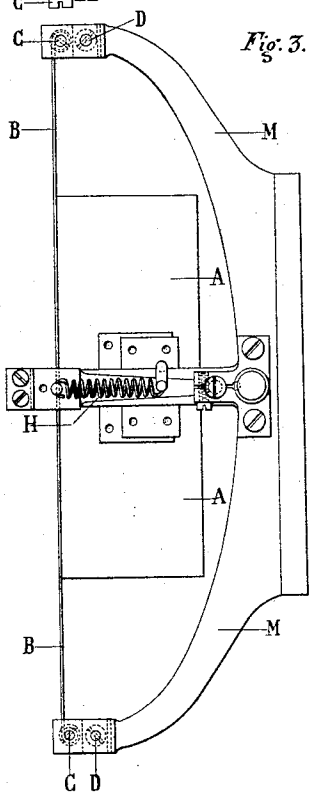

Fig. 2.

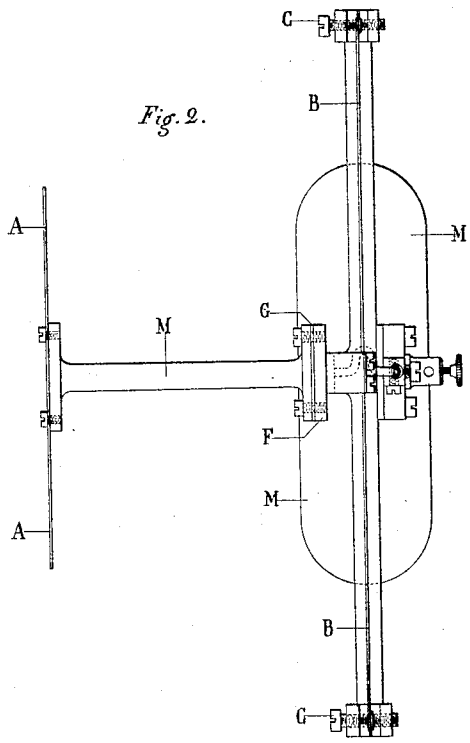

Attest
Miller Donaldson
F. L. Middleton

Inventor
François L. Sautter
by Ellis Spear
Atty.

THE NORRIS PETERS CO., PHOTO-LITHO., WASHINGTON, D. C.

(No Model.) 2 Sheets—Sheet 2.

F. L. SAUTTER.

ELECTRIC ARC LAMP.

No. 456,598. Patented July 28, 1891.

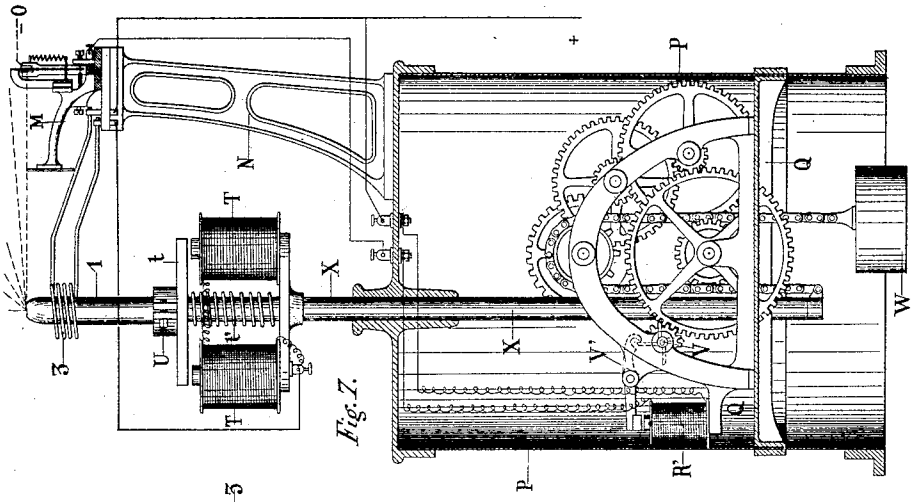

Fig. 7.

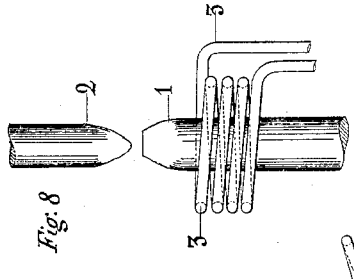

Fig. 8

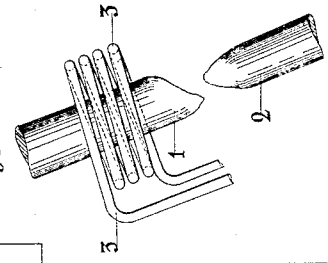

Fig. 9

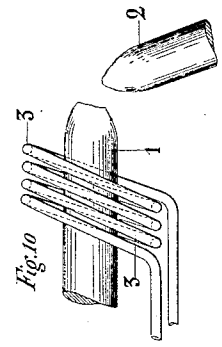

Fig. 10

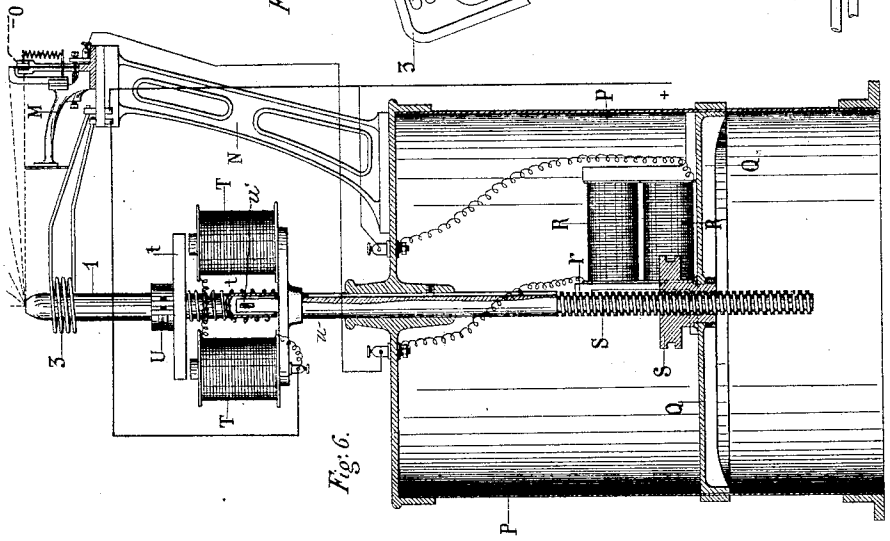

Fig. 6.

Attest
Walter Middleton
F. L. Middleton

Inventor
François L. Sautter
by Eleis Shea
Atty.

THE NORRIS PETERS CO., PHOTO-LITHO., WASHINGTON, D. C.

UNITED STATES PATENT OFFICE.

FRANÇOIS LOUIS SAUTTER, OF PARIS, FRANCE, ASSIGNOR TO SAUTTER, HARLE & CO., OF SAME PLACE.

ELECTRIC-ARC LAMP.

SPECIFICATION forming part of Letters Patent No. 456,598, dated July 28, 1891.

Application filed December 18, 1890. Serial No. 375,132. (No model.) Patented in France April 22, 1890, No. 205,215, and in England August 11, 1890, No. 12,532.

To all whom it may concern:

Be it known that I, FRANÇOIS LOUIS SAUTTER, a citizen of France, residing at Avenue de l'Alma 14, Paris, France, have invented certain new and useful Improvements in Electric-Arc Lighting; and I do hereby declare the following to be a full, clear, and exact description of the invention, such as will enable others skilled in the art to which it appertains to make and use the same, reference being had to the accompanying drawings, and to letters or figures of reference marked thereon, which form a part of this specification.

The invention has been patented in France April 22, 1890, No. 205,215, and in England August 11, 1890, No. 12,532.

The present invention has for its object improvements in electric-arc lamps, and relates especially to the automatic maintenance of the luminous point in the focus of the apparatus in which the lamp is placed, whether a light-house, a projector, or any other.

Up to the present time the fixity in space of the luminous electric focus has only been obtained by the simultaneous approach of the two carbons at an equal speed when an alternating current is employed, producing an equal expenditure of the electrodes, or with unequal speeds proportional to the expenditure of the electrodes when a continuous current is employed. When in consequence of the breaking of one of the carbons or from a speed of expenditure different from that which had been expected, or perhaps from a defective initial position given to the electric focus, this is not in its normal position, it is adjusted to it by hand by means of suitable mechanism while observing an image of the flame projecting upon a screen upon which the focal plane has been marked by a line.

The invention is an arrangement which results in the automatic replacing of the luminous facet of one of the electrodes to the position which has been assigned to it when for any reason it has left it. The position of the other electrode is regulated by the variation of the intensity of the current or counter electromotor force of the voltaic arc, so as to maintain a constant separation of the carbons during work. The sudden separation of the electrodes at the moment of lighting is brought about by the application of an electromotor mechanism to one or other of the carbons. Again, in order to obtain the fixity of the voltaic arc, I employ, as I describe farther on, one or more solenoids or permanent magnets or tubular electro-magnets.

My invention is represented in the annexed drawings, in which—

Figure 1 is a section of my regulating-thermomotor. Fig. 2 is a plan. Fig. 3 is an elevation. Figs. 4, 4^a, and 5 show details. Fig. 6 shows one of the arrangements of the electromotor actuated by the thermomotor-regulator and the necessary connections. Fig. 7 shows another arrangement of the apparatus working with a counter-weight. Figs. 8, 9, and 10 show different positions which the carbons may occupy.

In Figs. 1 to 5, A is a screen; B, an extensible metallic wire; C C, straining-screws; D D, screws for clamping the straining-screws C C; E, contact-lever, against which the middle part of the wire B rests; F, support for the lever; G, isolating supporting-plate; H, spring serving to hold the lever E in close contact with the middle part of the extensible wire; I and J, contact-screws; K, support for the screw J; L, isolating supporting-plate for the screw J; M, fixed support of the regulator; 1 and 2, carbons.

In Fig. 6, P is the case of the lamp; Q, the platform supporting the electromotor R; *r*, armature of the electromotor; *s*, ratchet-nut on the screw S, serving to approximate the carbons. The details of the ratchet arrangement are well known. T T is the lighting electro-magnet; *t*, armature of the electro-magnet T; *t'*, counter-spring of the lighting electro-magnet; U, carbon-carrier; *u*, stem of the carbon-carrier, moving vertically in the screw S; *u'*, stop limiting the movement of U; 1, carbon; 3, controlling-solenoid; M, regulating-thermomotor; N, support for the regulator; O, wire leading from the negative pole of the arc.

In Fig. 7, P' is the case of the lamp; Q, the platform supporting lifting mechanism; W, a counter-weight; R', electromotor operating the lever V for disengaging the stop-lever V';

X, guide-stem supporting the lighting electro-magnet T and the carbon-carrier U; *t*, armature of the lighting electro-magnet; *t'*, counter-spring of the lighting electro-magnet; U, carbon-carrier; *u*, stem of the carbon-carrier, moving vertically in the stem X; *u'*, stop limiting the movement of *u*; 3, controlling-solenoid; M, the regulating thermomotor; N, support for the regulator; O, wire leading from the negative pole of the arc.

In Figs. 8, 9, and 10, 1 represents positive carbons; 2, negative carbons; 3, controlling-solenoids.

Action of the apparatus.—As long as the luminous facet of the lower carbon 1 is on the level of or above the upper edge of the screen A it is seen by the wire B and heats it. The heated wire lengthens, and as the position of its ends does not vary it bends and allows the flexible lever E, which the spring H presses against the middle part of the wire, to move. This displacement multiplied by the lever breaks the contact between the end of the lever and the screw J. If the luminous facet of the lower carbon descends below the upper edge of the screen A, it is no longer seen by the wire, which immediately cools, contracts, and pressing upon the flexible lever E displaces it and re-establishes the contact between its lower end and the screw J. Then the current passes and actuates the electromotor R, Fig. 6, or the electromotor R', Fig. 7. The electro-magnet according to Fig. 6 moves a driving-pawl, which acts upon the ratchet-nut *s* to cause the displacement of the screw S. That of Fig. 7 lifts the stop V' and, setting free a clock-movement driven by a weight W, allows the carbon to be raised. When in consequence of its movement the luminous facet is again seen by the wire, this becomes heated, lengthens, and yields, the flexible lever is again displaced, and the contact with the screw J ceases. The contact with a screw I placed in front of the first may be utilized to send the current into a second mechanism similar to the first, but acting in the contrary direction to lower the carbon in place of raising it.

The electromotor R may be employed to raise, instead of the carbon-holder, a movable support upon which the lamp stands.

The heating of the wire B may be obtained either by the direct radiation of the luminous facet, as described above, or from the projection upon the wire of an image of this facet obtained by means of a lens suitably arranged or of a reflector. This arrangement allows of the regulating thermomotor being placed at a greater distance from the lamp and of increasing its sensibility by enlarging the image of the luminous point. The wire B may be replaced, if desired, by any other analogous thermomotor serving the same object.

The mechanism for separating the carbons at the moment of lighting operates as follows: When the principal current is sent to the lamp, (the carbons being in contact,) it passes in the electro-magnet T T, Figs. 6 and 7, and this attracts the armature *t*, overcoming the action of the antagonistic spring *t'*, and separates the carbons. The current which acts upon the electro-magnet R, Fig. 6, or R', Fig. 7, is a derivation from the principal current obtained by known means, which it is unnecessary to describe.

In Figs. 8, 9, and 10, I have represented different positions of the carbons. Around one of the electrodes I arrange one or more solenoids concentrically with respect to the electrode or electrodes or in any other position. The solenoids have for their object to impress upon the arc a movement of rotation centering it consequently upon the axis of the magnetic field created by the solenoid. In this manner the carbons are maintained of a constant and uniform shape. Fig. 8 shows a solenoid 3 concentric to the positive lower carbon 1. Its effect is to insure the horizontal and central position of the crater. Fig. 9 shows a crater maintained in an oblique position. Finally, Fig. 10 shows two carbons, which in place of being arranged upon the same axial line form an angle between them. This arrangement is rendered possible by the employment of the solenoids. I may also in place of the solenoids employ permanent magnets or tubular electro-magnets for centering the arc.

In certain cases it is convenient to rotate the two carbons or one of the two only upon their longitudinal axis, so as to insure an absolute uniformity of figure. This result may be obtained by means of any suitable mechanism.

The arrangement which I have described, and particularly the automatic regulator, may be applied to lamps working with alternating current as well as to lamps with continuous current.

Having now particularly described and ascertained the nature of my said invention and in what manner the same is to be performed, I declare that what I claim is—

1. In combination, in an electric-arc lamp, an electromotor for regulating the relative positions of the electrodes, a lever in the circuit of said motor to make and break said circuit, and a device for controlling the position of said lever, consisting of a wire or piece of material sensitive to the heat or light of the arc and adapted to move the said lever, substantially as described.

2. In combination, in an electric-arc lamp, an electromotor for regulating the positions of the electrodes, a flexible or expansible wire B, sensitive to the heat or light of the arc and arranged to be affected thereby, a circuit-breaker controlled by the movements of said wire, and a screen between the wire and the arc, substantially as described.

3. In combination, in an electric lamp, an

electromotor for regulating the positions of the electrodes, and a regulator for said motor, located in the circuit and to make and break contact, said regulator being in turn controlled and operated by the heat or light of the arc, substantially as described.

4. In combination, the electrodes, the stem X, the clock mechanism for raising said stem, the stop V′ for holding said mechanism in check, the electro-magnets R′ in shunt for controlling the position of the stop V′, and the thermo-regulator controlling the circuit of the magnets R′, said regulator being controlled by the heat or light from the arc, substantially as described.

5. In combination, in an arc lamp, the carbon-electrodes placed end to end, and solenoids or magnets encircling said electrodes in proximity to the arc, substantially as described.

In testimony whereof I affix my signature in presence of two witnesses.

FRANÇOIS LOUIS SAUTTER.

Witnesses:

G. DE MESTRAL,

ROBT. M. HOOPER.