(19) Europäisches Patentamt
European Patent Office
Office européen des brevets

(11) **EP 1 892 212 A1**

(12) **EUROPEAN PATENT APPLICATION**
published in accordance with Art. 153(4) EPC

(43) Date of publication:
27.02.2008 Bulletin 2008/09

(21) Application number: **05751401.0**

(22) Date of filing: **17.06.2005**

(51) Int Cl.:
B66B 5/24 *(2006.01)*

(86) International application number:
PCT/JP2005/011133

(87) International publication number:
WO 2006/134661 (21.12.2006 Gazette 2006/51)

(84) Designated Contracting States:
DE

(71) Applicant: **MITSUBISHI DENKI KABUSHIKI KAISHA**
Chiyoda-ku, Tokyo 100-8310 (JP)

(72) Inventor: **HONDA, Takenobu**
Mitsubishi Denki Kabushiki Kaisha
Chiyoda-ku, Tokyo
1008310 (JP)

(74) Representative: **HOFFMANN EITLE**
Patent- und Rechtsanwälte
Arabellastrasse 4
81925 München (DE)

(54) ROPE BRAKE DEVICE FOR ELEVATOR

(57) Amain rope suspending a car is held between a first rope holding member including a first roller and a second rope holding member including a second roller. The first roller and the second roller are respectively rotated with the movement of the main rope. At least one of the first roller and the second roller serves as a brake roller. A brake device has a rotary member rotated integrally with the brake roller, a brake member displaceable between a contact position where the brake member is in contact with the rotary member and a separated position where the brake member is separated from the rotary member, and a brake member displacing device displacing the brake member. The brake device brakes the rotation of the rotary member and the brake roller by bringing the brake member into contact with the rotary member. The movement of the main rope is braked by braking the rotation of the brake roller.

FIG. 1

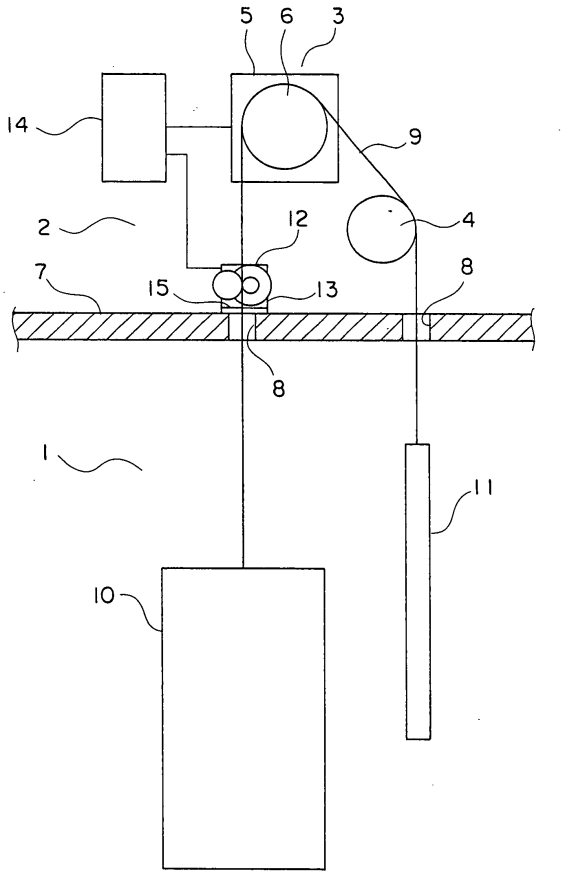

EP 1 892 212 A1

Description

TECHNICAL FIELD

[0001] The present invention relates to a rope brake device for an elevator for braking movement of a main rope suspending a car.

BACKGROUND ART

[0002] Up to now, there has been proposed a rope brake device for an elevator which grasps a main rope between two brake shoes to brake movement of the main rope. Attached to each brake shoe is a lining to be held in contact with the main rope while the main rope is grasped. Movement of the main rope is braked by a frictional force generated between the linings and the main rope (see Patent Document 1).

[0003] Patent Document 1: JP 07-509212 A

DISCLOSURE OF THE INVENTION

PROBLEMS TO BE SOLVED BY THE INVENTION

[0004] In this way, conventionally, when the movement of the main rope is braked, the main rope slides on the linings, so the wear of the main rope and the linings is rather intense. As a result, the magnitude of the braking force imparted to the main rope is liable to fluctuate. Further, the operation of replacing the components, such as the main rope and the brake shoes, is frequently performed, resulting in rather high running costs.

[0005] The present invention has been made with a view toward solving the problems as mentioned above. It is an object of the present invention to provide a rope brake device for an elevator capable of stabilizing the magnitude of the braking force imparted to the main rope and achieving a reduction in running costs.

MEANS FOR SOLVING THE PROBLEM

[0006] A rope brake device for an elevator according to the present invention includes: a rope holding device having a first rope holding member including a first roller and a second rope holding member including a second roller, a main rope for suspending a car being held between the first rope holding member and the second rope holding member, the first roller and the second roller being respectively rotated as the main rope moves, and at least one of the first roller and the second roller serving as a brake roller; and a brake device having a rotary member rotated integrally with the brake roller, a brake member displaceable between a contact position where the brake member is in contact with the rotary member and a separated position where the brake member is separated from the rotary member, and a brake member displacing device for displacing the brake member between the contact position and the separated position, the brake device braking the rotation of the rotary member and the brake roller by bringing the brake member into contact with the rotary member. The movement of the main rope is braked by braking the rotation of the brake roller.

BRIEF DESCRIPTION OF THE DRAWINGS

[0007]

Fig. 1 is a schematic view of an elevator apparatus according to Embodiment 1 of the present invention.
Fig. 2 is a longitudinal sectional view of the rope brake device of Fig. 1.
Fig. 3 is a plan view of the rope brake device of Fig. 2.
Fig. 4 is a front view of the rope brake device of Fig. 3.
Fig. 5 is a front view of a rope brake device for an elevator according to Embodiment 2 of the present invention.
Fig. 6 is a front view of a rope brake device for an elevator according to Embodiment 3 of the present invention.
Fig. 7 is a plan sectional view of an rope brake device for an elevator according to Embodiment 4 of the present invention.
Fig. 8 is a plan sectional view of an rope brake device for a elevator according to Embodiment 5 of the present invention.

BEST MODE FOR CARRYING OUT THE INVENTION

[0008] In the following, preferred embodiments of the present invention will be described with reference to the drawings.

Embodiment 1

[0009] Fig. 1 is a schematic view of an elevator apparatus according to Embodiment 1 of the present invention. In the drawing, a machine room 2 is provided in a top portion of a hoistway 1. In the machine room 2, there are provided a hoisting machine 3 serving as a driving machine, and a deflector sheave 4 spaced apart from the hoisting machine 3. The hoisting machine 3 has a hoisting machine main body 5 including a motor, and a driving sheave 6 rotated by the hoisting machine main body 5.

[0010] In a floor portion 7 of the machine room 2, there are provided through-holes 8 establishing communication between the interior of the machine room 2 and the interior of the hoistway 1. A plurality of main ropes 9 passed through the through-holes 8 are looped around the driving sheave 6 and the deflector sheave 4. Inside the hoistway 1, there are provided, so as to be capable of raising and lowering, a car 10 connected to one end of each main rope 9 and a counterweight 11 connected to another end of each main rope 9. The car 10 and the counterweight 11 are suspended in the hoistway 1 by the

main ropes 9. The car 10 and the counterweight 11 are caused to raise and lower within the hoistway 1 through rotation of the driving sheave 6.

[0011] Further, inside the machine room 2, there is provided a rope brake device for an elevator (hereinafter, simply referred to as "rope brake device") 12 for braking the movement of the main ropes 9. The rope brake device 12 is supported by a support member 13 fixed to the floor portion 7.

[0012] A control device 14 for controlling the operation of the elevator is electrically connected to the hoisting machine 3 and the rope brake device 12. The respective operations of the hoisting machine 3 and the rope brake device 12 are controlled based on a command (information) from the control device 14. The control device 14 is provided in the machine room 2.

[0013] Fig. 2 is a longitudinal sectional view of the rope brake device 12 of Fig. 1. Fig. 3 is a plan view of the rope brake device 12 of Fig. 2. Fig. 4 is a front view of the rope brake device 12 of Fig. 3. In the drawings, the support member 13 has a fixed portion 15 (Fig. 3) fixed to the floor portion 7, and a pair of opposing portions 16, 17 provided on the fixed portion 15 and opposed to each other with respect to a depth direction (thickness direction) of the rope brake device 12.

[0014] Between the opposing portions 16, 17, there are provided a first rope holding member 18 and a second rope holding member 19 arranged side by side in a width direction of the rope brake device 12. The main ropes 9 are passed between the first rope holding member 18 and the second rope holding member 19. The main ropes 9 are arranged in a row at intervals in the depth direction of the rope brake device 12.

[0015] The first rope holding member 18 has a first rotation shaft 21 extending in the depth direction of the rope brake device 12, and a first roller 22 fixed to the first rotation shaft 21. The first rotation shaft 21 is rotatably provided in the opposing portions 16, 17 through the intermediation of bearings 25. The first rotation shaft 21 and the first roller 22 are integrally rotated around an axis of the first rotation shaft 21.

[0016] The second rope holding member 19 has a second rotation shaft 23 extending in the depth direction of the rope brake device 12, and a second roller 24 fixed to the second rotation shaft 23. The second rotation shaft 23 is rotatably provided in the opposing portions 16, 17 through the intermediation of bearings 25. The second rotation shaft 23 and the second roller 24 are integrally rotated around the axis of the second rotation shaft 23.

[0017] The first roller 22 and the second roller 24 are arranged between one opposing portion 16 and the other opposing portion 17. The outer diameter of the first roller 22 is larger than the outer diameter of the second roller 24.

[0018] In the outer peripheral portion of the first roller 22, there are provided a plurality of first rope grooves 26 extending in the rotating direction of the first roller 22. In the outer peripheral portion of the second roller 24, there are provided a plurality of second rope grooves 27 extending in the rotating direction of the second roller 24.

[0019] The main ropes 9 are held between the first roller 22 and the second roller 24 while accommodated in the first rope grooves 26 and the second rope grooves 27. The first roller 22 and the second roller 24 are pressed toward each other. As a result, a frictional force is generated between each of the first roller 22 and the second roller 24, and the main ropes 9. Due to the movement of the main ropes 9, the first roller 22 and the second roller 24 are rotated while held in contact with the main ropes 9. The material of the outer peripheral portions of the first roller 22 and the second roller 24 is a friction material for preventing damage of the main ropes 9. As the friction material, nylon (registered trademark), a urethane resin, or the like is used.

[0020] The rotation of the second rotation shaft 23 and the second roller 24 is braked by a brake device 28 supported by the support member 13. That is, the second roller 24 serves as a brake roller whose rotation is braked by the brake device 28.

[0021] The brake device 28 has a disc (rotary member) 29 integrally rotated with the second rotation shaft 23, a brake member 30 that can be displaced between a contact position where the brake member 30 is in contact with the disc 29 and a separate position where the brake member 30 is separated from the disc 29, and a brake member displacing device 31 for displacing the brake member 30 between the contact position and the separated position. Figs. 2 and 3 show the rope brake device 12 when the brake member 30 is at the contact position.

[0022] A part of the second rotation shaft 23 protrudes to the outside of the support member 13 from one opposing portion 16 as a protruding shaft portion 23a (Fig. 2). The disc 29 is provided on the protruding shaft portion 23a through the intermediation of a sprocket 32.

[0023] The protruding shaft portion 23a is provided with a plurality of fit-engagement grooves 33 extending in the axial direction of the second rotation shaft 23. The sprocket 32 is slidably fit-engaged with the fit-engagement grooves 33. The disc 29 is slidably fit-engaged with a toothed portion provided in the outer peripheral portion of the sprocket 32. As a result, the sprocket 32 and the disc 29 are fixed with respect to the rotating direction of the second rotation shaft 23 and displaceable with respect to the axial direction of the second rotation shaft 23.

[0024] A disc-like mounting plate 34 is fixed to the disc 29 side surface of one opposing portion 16. A lining 35 is attached to the surface of the mounting plate 34 opposed to the disc 29. Threadedly engaged with the outer peripheral portion of the mounting plate 34 are a plurality of support bolts 36 arranged on the radially outer side of the disc 29. The support bolts 36 extend in the axial direction of the second rotation shaft 23. The brake member 30 and the brake member displacing device 31 are provided on the support bolts 36. That is, the brake member 30 and the brake member displacing device 31 are supported by the mounting plate 34 through the interme-

diation of the support bolts 36.

[0025] The brake member displacing device 31 is spaced further apart from the mounting plate 34 than the disc 29 with respect to the axial direction of the second rotation shaft 23. The brake member 30 is arranged between the brake member displacing device 31 and the disc 29. The disc 29 is arranged between the mounting plate 34 and the brake member 30. The protruding shaft portion 23a extends through each of the brake member 30, the brake member displacing device 31, and the mounting plate 34.

[0026] The separated position of the brake member 30 is spaced further apart from the mounting plate 34 than the contact position with respect to the axial direction of the second rotation shaft 23. That is, the separatedposition of the brake member 30 is situated nearer to the brake member displacing device 31 than the contact position. During the movement of the brake member 30 from the separated position to the contact position, the brake member 30 hits the disc 29, and is displaced toward the mounting plate 34 together with the disc 29. When the brake member 30 reaches the contact position, the disc 29 is pressed against the mounting plate 34 while held in contact with the brake member 30 (braking operation). The disc 29 is separated from the brake member 30 and the mounting plate 34 through displacement of the brake member 30 from the contact position to the separated position (releasing operation).

[0027] The brake member 30 has an armature 37 guided in the axial direction of the second rotation shaft 23 along the support bolts 36, and a lining 38 attached to the surface of the armature 37 opposed to the disc 29.

[0028] When the brake member 30 is at the contact position, the linings 35, 38 are in contact with the disc 29. At this time, a frictional force is generated between each of the linings 35, 38, and the disc 29. As a result, a braking force for braking the rotation of the second rotation shaft 23 and the second roller 24 is imparted to the disc 29. The magnitude of the braking force imparted to the disc 29 is set to be smaller than the magnitude of the frictional force generated between the second roller 24 and the main ropes 9.

[0029] The rotation of the second rotation shaft 23 and the second roller 24 is braked by the braking operation of the brake device 28. The movement of the main ropes 9 is braked through the braking of the rotation of the second roller 24. The braking force imparted to the second rotation shaft 23, the second roller 24, and the main ropes 9 is released by the releasing operation of the brake device 28.

[0030] The brake member displacing device 31 has a plurality of springs (urging members) 39 urging the brake member 30 so as to displace the brake member 30 toward the contact position, and an electromagnet 40 for displacing the brake member 30 to the separated position against the urging force of the springs 39. The electromagnet 40 has an electromagnetic coil 41. Through electricity supply to the electromagnetic coil 41, the electromagnet 40 generates an electromagnetic attracting force causing the brake member 30 to be displaced to the separated position.

[0031] When the electricity supply to the electromagnetic coil 41 is stopped, the brake member 30 is displaced to the contact position by the urging force of the springs 39. When electricity is supplied to the electromagnetic coil 41, the brake member 30 is displaced to the separated position against the urging force of the springs 39 by the electromagnetic attracting force generated by the electromagnet 40.

[0032] A rope holding device 42 for holding the main ropes 9 has the first rope holding member 18 and the second rope holding member 19. The rope brake device 12 has the rope holding device 42 and the brake device 28.

[0033] Next, the operation of this embodiment will be described. When the car 10 is at rest, the electricity supply to the electromagnetic coil 41 is stopped through control by the control device 14. At this time, the brake member 30 has been displaced to the contact position. As a result, a braking force is imparted to the disc 29 and the second roller 24.

[0034] When the movement of the car 10 is started, electricity is supplied to the electromagnetic coil 41 through control by the control device 14. This causes the brake member 30 to be displaced from the contact position to the separated position. As a result, the braking force imparted to the disc 29 and the second roller 24 is released.

[0035] When the car 10 is moved within the hoistway 1, the first roller 22 and the second roller 24 are rotated with the movement of the car 10 while in contact with the main ropes 9. The disc 29 is rotated integrally with the second roller 24.

[0036] After that, when the car 10 reaches the destination floor, the electricity supply to the electromagnetic coil 41 is stopped through control by the control device 14. This causes the brake member 30 to be displaced from the separated position to the contact position. As a result, a braking force is imparted to the disc 29 and the second roller 24, and the movement of the main ropes 9 is braked.

[0037] In this rope brake device 12 for an elevator, the first roller 22 and the second roller 24 are rotated with the movement of the main ropes 9 and the disc 29 is rotated integrally with the second roller 24 with the rotation of the disc 29 being braked by the brake member 30 coming into contact with the disc 29, so it is possible to impart a braking force to the main ropes 9 while rotating the first roller 22 and the second roller 24, making it possible to prevent the main ropes 9 from sliding with respect to the first roller 22 and the second roller 24. As a result, it is possible to suppress wear of the main ropes 9, the first roller 22, and the second roller 24, and to stabilize the magnitude of the braking force the rope brake device 12 imparts to the main ropes 9. Further, the frequency with which component displacement is performed on the

main ropes 9, the first roller 22, and the second roller 24 is reduced, so it is possible to achieve a reduction in running costs. Further, since the rotation of the disc 29 is braked by bringing the brake member 30 into contact with the disc 29 of high machining precision, it is possible to impart a still more stable braking force to the second roller 24, making it possible to brake the movement of the main ropes 9 in a more stable manner.

[0038] The brake member displacing device 31 displaces the brake member 30 between the contact position and the separated position based on information from the control device 14, so it is possible to control the operation of the rope brake device 12 in conformity with the operation of the elevator. As a result, it is possible, for example, to prevent the hoisting machine 3 from being loaded by the braking operation of the rope brake device 12.

[0039] Further, the magnitude of the frictional force between the second roller 24 and the main ropes 9 is set to be larger than the magnitude of the braking force of the brake device 28 exerted on the second roller 24, so when the rotation of the second roller 24 is being braked by the brake device 28, it is possible to prevent generation of slippage of the second roller 24 with respect to the main ropes 9. As a result, it is possible to further suppress wear of the main ropes 9 and the second roller 24.

[0040] While in the above-mentioned example the braking force is imparted solely to the second roller 24, that is, the second roller 24 alone serves as the brake roller, it is also possible for the first roller 22 alone to serve as the brake roller, or for the first roller 22 and the second roller 24 to serve as the brake rollers.

[0041] Further, while in the above-mentioned example the rotary member with which the brake member 30 is brought into and out of contact is the disc 29, it is also possible for the rotary member to be an annular drum. In this case, the brake member to be brought into and out of contact with the drum and the brake member displacing device for displacing the brake member are arranged on the inner side of the drum.

[0042] Further, while in the above-mentioned example the main ropes 9 are held between one first roller 22 and one second roller 24, it is also possible to arrange a plurality of first rollers 22 and a plurality of second rollers 24 in the length direction of the main ropes 9, holding the main ropes 9 between the first rollers 22 and the second rollers 24. In this case, at least one of the first rollers 22 and the second rollers 24 constitute the brake rollers braked by the brake device 28. In this arrangement, it is possible to enlarge the contact area of the first rollers 22 and the second rollers 24 with respect to the main ropes 9, thereby making it possible to reduce the damage of the main ropes 9.

[0043] Embodiment 2

[0044] While in the above-mentioned example the first roller 22 and the second roller 24 are in contact with the main ropes 9, it is also possible to loop a first endless belt around a plurality of first rollers 22 so as to collectively surround the first rollers 22, and to loop a second endless belt around a plurality of second rollers 24 so as to collectively surround the second rollers 24, holding the first endless belt and the second endless belt in contact with the main ropes 9.

[0045] Fig. 5 is a front view of a rope brake device for an elevator according to Embodiment 2 of the present invention. In the drawing, a first rope holding member 51 and a second rope holding member 52 are provided on the support member 13. The main ropes 9 are passed between the first rope holding member 51 and the second rope holding member 52.

[0046] The first rope holding member 51 has a plurality of (two, in this example) first rotation shafts 53, 54 arranged so as to be spaced apart from each other in the length direction of the main ropes 9, a plurality of (two, in this example) first rollers 55, 56 fixed to the first rotation shafts 53, 54, respectively, and a first endless belt 57 looped around the first rollers 55, 56 so as to collectively surround the first rollers 55, 56. Tension is imparted to the first endless belt 57 by the first rollers 55, 56.

[0047] The second rope holding member 52 has a plurality of (two, in this example) second rotation shafts 58, 59 arranged so as to be spaced apart from each other in the length direction of the main ropes 9, a plurality of (two, in this example) second rollers 60, 61 fixed to the second rotation shafts 58, 59, respectively, and a second endless belt 62 looped around the second rollers 60, 61 so as to collectively surround the second rollers 60, 61. Tension is imparted to the second endless belt 62 by the second rollers 60, 61.

[0048] The first endless belt 57 and the second endless belt 62 run with the movement of the main ropes 9 while in contact with the main ropes 9. In the outer peripheral portion of the first endless belt 57, there are provided a plurality of first belt grooves 63 extending in the direction in which the first endless belt 57 runs. In the outer peripheral portion of the second endless belt 62, there are provided a plurality of second belt grooves 64 extending in the direction in which the second endless belt 62 runs. The main ropes 9 are held between the first endless belt 57 and the second endless belt 62 while accommodated in the first belt grooves 63 and the second belt grooves 64.

[0049] The first rotation shafts 53, 54 are provided with a connection plate 65 for maintaining a predetermined distance between the first rollers 55, 56. On the connection plate 65, there is rotatably provided a first intermediate roller 66 arranged between the first roller 55 and the first roller 56. The first intermediate roller 66 is in contact with the inner peripheral surface of the first endless belt 57. The first intermediate roller 66 rotates with the running of the first endless belt 57 while in contact with the inner peripheral surface of the first endless belt 57.

[0050] The second rotation shafts 58, 59 are provided with a connection plate 67 for maintaining a predetermined distance between the second rollers 60, 61. On the connection plate 67, there is rotatably provided a sec-

ond intermediate roller 68 arranged between the second roller 60 and the second roller 61. The second intermediate roller 68 is in contact with the inner peripheral surface of the second endless belt 62. The second intermediate roller 68 rotates with the running of the second endless belt 62 while in contact with the inner peripheral surface of the second endless belt 62.

[0051] The first roller 55, the first roller 56, and the first intermediate roller 66 are respectively arranged at the same positions as the second roller 60, the second roller 61, and the second intermediate roller 68 with respect to the length direction of the main ropes 9. The first roller 55, the first roller 56, and the first intermediate roller 66 and the second roller 60, the second roller 61, and the second intermediate roller 68 are pressed toward each other, respectively. As a result, a frictional force is generated between the first endless belt 57 and the second endless belt 62, and the main ropes 9, respectively.

[0052] At least one of the first rollers 55, 56 and the second rollers 60, 61 serves as a brake roller braked by the brake device 28. In this example, the first roller 56 and the second roller 60, arranged at positions different from each other with respect to the length direction of the main ropes 9, serve as brake rollers. Supported by the support member 13 are two brake devices 28 individually braking the respective rotations of the first roller 56 and the second roller 60. The brake devices 28 are of the same construction as that of Embodiment 1.

[0053] The frictional force between the first roller 56 and the first endless belt 57 and the frictional force between the main ropes 9 and the first endless belt 57 are set to be larger than the braking force of the brake device 28 imparted to the first rotation shaft 54 and the first roller 56. The frictional force between the second roller 60 and the second endless belt 62 and the frictional force between the main ropes 9 and the second endless belt 62 are set to be larger than the braking force of the brake device 28 imparted to the second rotation shaft 58 and the second roller 60. The rest of the construction of this embodiment is same as that of Embodiment 1.

[0054] In this rope brake device for an elevator, the main ropes 9 are held between the first endless belt 57 looped around the first rollers 55, 56 and the second endless belt 62 looped around the second rollers 60, 61, so, as compared with the case in which the first rollers 55, 56 and the second rollers 60, 61 are held in direct contact with the main ropes 9, it is possible to enlarge the contact area of the first rope holding member 51 and the second rope holding member 52 with respect to the main ropes 9, thereby further reducing damage thereof.

[0055] Further, the frictional force between each of the first endless belt 57 and the second endless belt 62, and the main ropes 9 is set to be larger than the braking force of the brake devices 28 exerted on the first roller 56 and the second roller 60, so when the rotations of the first roller 56 and the second roller 60 are being braked by the brake devices 28, it is possible to prevent generation of slippage of the first endless belt 57 and the second endless belt 62 with respect to the main ropes 9.

[0056] While in the above-mentioned example the first roller 56 and the second roller 60 serve as the brake rollers, it is only necessary for at least one of the first rollers 55, 56 and the second rollers 60, 61 to serve as the brake roller.

Embodiment 3

[0057] Fig. 6 is a front view of a rope brake device for an elevator according to Embodiment 3 of the present invention. In the drawing, a rope holding device 71 for holding the main ropes 9 is provided on the support member 13. The rope holding device 71 has a first rope holding member 72, a second rope holding member 73 displaceable between an operating position where the second rope holding member 73 is held in contact with the main ropes 9 to press the main ropes 9 against the first rope holding member 72 and a release position where the second rope holding member 73 is separated from the main ropes 9, and a rope holdingmember displacing device 74 for displacing the second rope holding member 73 between the operating position and the release position. Fig. 6 shows the rope brake device when the second rope holding member 73 is at the operating position.

[0058] The rope holding member displacing device 74 has an arm 75 rotatable with respect to the support member 13, and an arm rotating device 76 supported by the support member 13 and for rotating the arm 75. The fixed portion 15 is provided with a mounting pin 77 extending in the depth direction of the rope brake device. The proximal end portion of the arm 75 is mounted to the mounting pin 77. The arm 75 is capable of rotating about the axis of the mounting pin 77. The distal end portion of the arm 75 is connected to the arm rotating device 76. The rope holding member displacing device 74 is operated based on a command (information) from the control device 14.

[0059] The first rope holding member 72 has a plurality of (two, in this example) first rotation shafts 21 arranged so as to be spaced apart from each other in the length direction of the main ropes 9, and a plurality of (two, in this example) first rollers 22 fixed to the first rotation shafts 21. The first rotation shafts 21 are rotatably provided on the support member 13 through the intermediation of bearings. The first rotation shafts 21 and the first rollers 22 are rotated integrally around the axes of the first rotation shafts 21.

[0060] The second rope holding member 73 is provided on the arm 75. The second rope holding member 73 is displaced between the operating position and the release position through rotation of the arm 75. Further, the second rope holding member 73 has a plurality of (two, in this example) second rotation shafts 23 arranged so as to be spaced apart from each other in the length direction of the arm 75, and a plurality of (two, in this example) rollers 24 respectively fixed to the second rotation shafts 23. The second rotation shafts 23 are rotatably provided on the arm 75 through the intermediation

of bearings. The second rotation shafts 23 and the second rollers 24 are integrally rotated around the axes of the second rotation shafts 23'. Parts of the second rotation shafts 23 constitute protruding shaft portions protruding from the opposing portion 16 to the outer side of the support member 13.

[0061] The brake devices 28 are respectively provided on the protruding shaft portions of the second rotation shafts 23. The brake devices 28 are supported by the second rotation shafts 23. Due to the rotation of the arm 75, the brake devices 28 are displaced together with the second rotation shafts 23. The brake devices 28 are of the same construction as that of Embodiment 1.

[0062] The brake devices 28 are controlled by the control device 14 such that the brake members (see Fig. 2) are displaced to the contact positions when the second rope holding member 73 is displaced to the operating position and that the brake members are displaced to the separated positions when the second rope holding member 73 is displaced to the release position. The rotation of the second rollers 24 is braked through displacement of the brake members to the contact positions. That is, the second rollers 24 serve as brake rollers braked by the brake devices 28.

[0063] In the outer peripheral portions of the first rollers 22, there are provided the plurality of first rope grooves 2 6 extending in the rotating direction of the first rollers 22. In the outer peripheral portions of the second rollers 24, there are provided the plurality of second rope grooves 27 extending in the rotating direction of the second rollers 24.

[0064] When the second rope holding member 73 is at the operating position, the main ropes 9 are held between the first rollers 22 and the second rollers 24 while accommodated in the first rope grooves 26 and the second rope grooves 27. When the second rope holding member 73 is at the operating position, a frictional force is generated between each of the first rollers 22 and the second rollers 24, and the main ropes 9. When the second rope holding member 73 is at the operating position, the first rollers 22 and the second rollers 24 rotate with the movement of the main ropes 9 while in contact with the main ropes 9. The respective constructions of the first rollers 22 and the second rollers 24 are the same as those of Embodiment 1.

[0065] When the second rope holding member 73 is displaced to the release position, the main ropes 9 are separated not only from the second rollers 24 but also from the first rollers 22. Thus, when the second rope holding member 73 is at the release position, the rotation of the first rollers 22 and the second rollers 24 remains stopped if the main ropes 9 are moved. That is, when the second rope holding member 73 is at the release position, the transmission of force from the main ropes 9 to each of the first rollers 22 and the second rollers 24 is cut off. It is also possible for the main ropes 9 to be constantly held in contact with the first rollers 22 regardless of the position of the second rope holding member 73.

[0066] The arm rotating device 76 is supported by the support member 13. The distal end portion of the arm 75 is connected to the arm rotating device 76 through the intermediation of a connection bolt (connection member) 78. The arm rotating device 76 rotates the arm 75 so that the second rope holding member 73 is displaced between the operating position and the release position.

[0067] The arm rotating device 76 has a movable member 79 displaced together with the arm 75, a frame member 80 supported by the support member 13 for regulating the displacement amount of the movable member 79, a plurality of springs (urging members) 81 urging the arm 75 and the movable member 79 in the direction in which the second rope holding member 73 is displaced to the operating position, and an electromagnet 82 for displacing, against the urging force of the springs 81, the arm 75 and the movable member 79 in the direction in which the second rope holding member 73 is displaced to the release position.

[0068] The movable member 79 has a movable member main body 83 mounted to the distal end portion of the arm 75 through the intermediation of the connection bolt 78, and a plate-like armature 84 fixed to the movable member main body 83 and provided so as to be displaceable within the frame member 80.

[0069] The frame member 80 has a first regulating portion 85 and a second regulating portion 86 arranged so as to be spaced apart from each other in the direction in which the movable member 79 is displaced. The first regulating portion 85 is arranged on the arm 75 side with respect to the second regulating portion 86. The electromagnet 82 arranged inside the frame member 80 is fixed to the second regulating portion 86. The armature 84 is arranged in the gap between the first regulating portion 85 and the electromagnet 82. The second rope holding member 73 is displaced to the operating position when the armature 84 is brought into contact with the first regulating portion 85, and is displaced to the release position when the armature 84 is brought into contact with the electromagnet 82.

[0070] The springs 81 are provided in a contracted state between the first regulating portion 85 and the arm 75. That is, the arm 75 is urged by the springs 81 away from the first regulating portion 85. The electromagnet 82 has an electromagnetic coil 87. By supplying electricity to the electromagnetic coil 87, the electromagnet 82 generates an electromagnetic attracting force attracting the armature 84.

[0071] When the electricity supply to the electromagnetic coil 87 is stopped, the second rope holding member 73 is displaced to the operating position by the urging force of the springs 81. When electricity is supplied to the electromagnetic coil 87, the armature 84 is attracted by the electromagnet 82 against the urging force of the springs 81, and the second rope holding member 73 is displaced from the operating position to the release position. The rest of the constitution of this embodiment is same as that of Embodiment 1.

[0072] Next, the operation of this embodiment will be described. When the car 10 is at rest, the electricity supply to the electromagnetic coils of the brake devices 28 and the electricity supply to the electromagnetic coil 87 of the arm rotating device 76 are stopped. At this time, the brake members of the brake devices 28 are displaced to the contact positions, and the second rope holding member 73 is displaced to the operating position. That is, the rotation of the second rollers 24 is braked by the brake devices 28, with the first rollers 22 and the second rollers 24 being in contact with the main ropes 9.

[0073] When the movement of the car 10 is started, electricity is supplied to the electromagnetic coils of the brake devices 28 and to the electromagnetic coil 87 of the arm rotating device 76. As a result, the brake members of the brake devices 28 are displaced to the separated position, and the second rope holding member 73 is displaced to the release position, whereby the braking force imparted to the main ropes 9 is released.

[0074] After that, the car 10 is moved within the hoistway 10. When the car 10 is being moved, the first rollers 22 and the second rollers 24 are not rotated with the movement of the main ropes 9 since the first rollers 22 and the second rollers 24 are separated from the main ropes 9.

[0075] After that, when the car 10 reaches the destination floor, the electricity supply to the electromagnetic coils of the brake devices 28 and the electricity supply to the electromagnetic coil 87 of the arm rotating device 76 are stopped. As a result, the brake members of the brake devices 28 are displaced from the separated position to the contact position, and the second rope holding member 73 is displaced from the release position to the operating position, whereby a braking force is imparted to the main ropes 9.

[0076] In this rope brake device for an elevator, the second rope holding member 73 is displaced between the operating position, where the second rope holding member 73 is in contact with the main ropes 9 and presses the main ropes 9 against the first rope holding member 72, and the release position, where the second rope holding member 73 is separated from the main ropes 9; when the second rope holding member 73 is at the operating position, the movement of the main ropes 9 is braked by braking the rotation of the second rollers 24, so it is possible to brake the movement of the main ropes 9 while rotating the first rollers 22 and the second rollers 24, and to prevent sliding of the main ropes 9 with respect to the first rollers 22 and the second rollers 24. This makes it possible to stabilize the magnitude of the braking force imparted to the main ropes 9 by the rope brake device 12, and to achieve a reduction in running costs. Further, it is possible to prevent the second rope holding member 73 from continuing to press the main ropes 9 against the first rope holding member 72, so it is possible to further reduce the damage of the main ropes 9, the first rope holding member 72, and the second rope holding member 73.

[0077] Further, since the rope holding member displacing device 74 displaces the second rope holding member 73 between the operating position and the release position based on a command from the control device 14, it is possible to control the operation of the rope brake device in conformity with the operation of the elevator. As a result, it is possible, for example, to prevent the hoisting machine 3 from being loaded by the braking operation of the rope brake device.

Embodiment 4

[0078] Fig. 7 is a plan sectional view of an rope brake device for an elevator according to Embodiment 4 of the present invention. In the drawing, a rope holding device 91 for holding the main ropes 9 is provided on the support member 13. The rope holding device 91 has a first rope holding member 92, a second rope holding member 93 displaceable between an operating position where the second rope holding member 93 is held in contact with the main ropes 9 to press the main ropes 9 against the first rope holding member 92 and a release position where the second rope holding member 93 is separated from the main ropes 9, and a rope holding member displacing device 94 for displacing the second rope holding member 93 between the operating position and the release position. Fig. 7 shows the rope brake device when the second rope holdingmember 93 is at the operating position.

[0079] The rope holding member displacing device 94 is arranged between one opposing portion 16 and the other opposing portion 17. The rope holding member displacing device 94 has a movable member 95 displaced together with the second rope holding member 93, and an electromagnetic opening/closing device 96 for displacing the movable member 95.

[0080] The movable member 95 has an armature 97 opposed to the electromagnetic opening/closing device 96, and a mounting portion 99 fixed to the armature 97 and equipped with a recess 98 on the first rope holding member 92 side. The electromagnetic opening/closing device 96 has a plurality of springs (urgingmembers) 100 urging the movable member 95 in the direction in which the second rope holding member 93 is displaced to the operating position, and an electromagnet 101 displacing the movable member 95 in the direction in which the second rope holding member 93 is displaced to the release position against the springs 100.

[0081] The electromagnet 101 has an electromagnetic coil 102. The electromagnet 101 generates an electromagnetic attracting force for attracting the armature 97 through electricity supply to the electromagnetic coil 102. The electricity supply to the electromagnetic coil 102 and the stopping thereof are controlled by the control device 14. The second rope holding member 93 is displaced to the release position through electricity supply to the electromagnetic coil 102, and is displaced to the operating position by stopping the electricity supply to the electro-

magnetic coil 102.

[0082] The first rope holding member 92 has the first rotation shaft 21 rotatably provided on the support member 13, and the first roller 22 fixed to the first rotation shaft 21. The first rotation shaft 21 and the first roller 22 are rotated integrally around the axis of the first rotation shaft 21.

[0083] The second rope holding member 93 is provided on the movable member 95, with a part thereof being arranged in the recess 98. The second rope holding member 93 has the second rotation shaft 23 rotatably provided on the movable member 95, and the second roller 24 fixed to the second rotation shaft 23. The second rotation shaft 23 and the second roller 24 rotate integrally around the axis of the second rotation shaft 23.

[0084] In the outer peripheral portion of the first roller 22, there are provided the plurality of first rope grooves 26 extending in the rotating direction of the first roller 22. In the outer peripheral portion of the second roller 24, there are provided the plurality of second rope grooves 27 extending in the rotating direction of the second roller 24.

[0085] When the second rope holding member 93 is at the operating position, the main ropes 9 are held between the first roller 22 and the second roller 24 while accommodated in the first rope grooves 26 and the second rope grooves 27. When the second rope holding member 93 is at the operating position, a frictional force is generated between each of the first roller 22 and the second roller 24, and the main ropes 9. Further, when the second rope holding member 93 is at the operating position, the first roller 22 and the second roller 24 rotate while in contact with the main ropes 9 with the movement of the main ropes 9.

[0086] When the second rope holding member 93 is displaced to the release position, the main ropes 9 are separated not only from the second roller 24 but also from the first roller 22. That is, when the second rope holding member 93 is at the release position, the transmission of force from the main ropes 9 to each of the first roller 22 and the second roller 24 is cut off. It is also possible for the main ropes 9 to be always held in contact with the first roller 22 regardless of the position of the second rope holding member 93.

[0087] Between one opposing portion 16 and the first roller 22, there is provided a brake device 103 for braking the rotation of the first rotation shaft 21 and the first roller 22. That is, the first roller 22 serves as a brake roller braked by the brake device 103. The brake device 103 has a slide plate (rotary member) 104 fixed to the first roller 22, a brake member 105 to be held in contact with the slide plate 104, and a pressing device 106 for pressing the brake member 105 against the slide plate 104.

[0088] The pressing device 106 has a plurality of press springs (urging members) 107 for generating a pressing force to press the brake member 105 against the slide plate 104, and a plurality of adjustment bolts 108 provided in one opposing portion 16 and serving to adjust the magnitude of the pressing force of the press springs 107. The magnitude of the pressing force of the press springs 107 is adjusted through adjustment of the threaded-engagement amount of the adjustment bolts 108 with respect to one opposing portion 16.

[0089] The brake member 105 has a brake member main body 110 provided with spring accommodating grooves 109 accommodating the press springs 107, and a friction member 111 provided on the brake member main body 110 and held in contact with the slide plate 104. The brake member 105 is constantly pressed by the pressing device 106 while in contact with the slide plate 104. As a result, a friction force is constantly generated between the slide plate 104 and the friction member 111. The rotation of the first rotation shaft 21 and the first roller 22 is braked by the frictional force generated between the slide plate 104 and the friction member 111. The magnitude of the frictional force generated between the slide plate 104 and the friction member 111 is set to be smaller than the magnitude of the frictional force generated between each of the first roller 22 and the second roller 24, and the main ropes 9 through adjustment of the threaded-engagement amount of the adjustment bolts 108. The rest of the constitution of this embodiment is same as that of Embodiment 1.

[0090] Next, the operation of this embodiment will be described. The brake member 105 is constantly pressed by the pressing device 106 against the slide plate 104 fixed to the first roller 22, whereby a braking force is constantly imparted to the first rotation shaft 21 and the first roller 22.

[0091] When the car 10 is at rest, the electricity supply to the electromagnetic coil 102 is stopped through control by the control device 14. At this time, the second rope holding member 93 is displaced to the operating position. As a result, a braking force is imparted to the main ropes 9.

[0092] When the movement of the car 10 is started, electricity is supplied to the electromagnetic coil 102 through control by the control device 14. As a result, the second rope holding member 93 is displaced from the operating position to the release position against the urging force of the springs 100. As a result, the first rope holding member 92 and the second rope holding member 93 are separated from the main ropes 9, and the braking force imparted to the main ropes 9 is released. After that, the car 10 is moved within the hoistway 1, with the first roller 22 and the second roller 24 being separated from the main ropes 9.

[0093] Subsequently, when the car 10 reaches the destination floor, the electricity supply to the electromagnetic coil 102 is stopped through control by the control device 14. As a result, the second rope holding member 93 is displaced from the release position to the operating position, whereby the main ropes 9 are pressed against the first roller 22, and a braking force is imparted to the main ropes 9.

[0094] In this way, the rotation of the first roller 22 is

always braked by constantly holding the brake member 105 in contact with the slide plate 104, so it is possible to eliminate the mechanism for operating the brake member 105, thereby simplifying the construction of the brake device 103. Further, the maintenance operation for the brake device 103 is facilitated.

[0095] Since the first roller 22 and the slide plate 104 are integrated with each other, it is possible to further reduce the number of components, making it possible to further simplify the construction of the first rope holding member 92 and the brake device 103.

[0096] While in the above-mentioned example the first roller 22 alone serves as a brake roller, it is also possible for the second brake roller 24 alone to serve as a brake roller.

[0097] Further, while in the above-mentioned example the rotary member in contact with the brake member 105 is the slide plate 104, the rotary member may also have a shape of an annular drum. In this case, the brake member in contact with the drum and the pressing device pressing the brake member against the drum are arranged on the inner side of the drum.

Embodiment 5

[0098] Fig. 8 is a plan sectional view of an rope brake device for a elevator according to Embodiment 5 of the present invention. Fig. 8 shows the rope brake device when the second rope holding member 93 is at the operating position. In the drawing, a part of the second rotation shaft 23 protrudes to the exterior of the support member 13 from one opposing portion 16 as the protruding shaft portion 23a. The protruding shaft portion 23a is provided with a brake device 121 for braking the rotation of the second rotation shaft 23. That is, the second roller 24 serves as a brake roller braked by the brake device 121. Between the brake device 121 and one opposing portion 16, there is arranged a mounting member 122 through which the protruding shaft portion 23a is passed. The mounting member 122 is fixed to one opposing portion 16.

[0099] The brake device 121 has a rotary member 123 rotated integrally with the protruding shaft portion 23a, a slide plate (brake member) 124 arranged between the rotary member 123 and the mounting member 122 and held in contact with the rotary member 123, and a pressing device 125 pressing the rotary member 123 against the slide plate 124. The brake device 121 is displaced together with the second rope holding member 93 with respect to the support member 13 and the mounting member 122.

[0100] Between the rotary member 123 and the protruding shaft portion 23a, there is arranged a key 126 extending in the axial direction of the second rotation shaft 23. As a result, with respect to the protruding shaft portion 23a, the rotary member 123 is displaceable in the axial direction of the second rotation shaft 23 but is fixed in the rotating direction of the rotary member 123.

[0101] The slide plate 124 is a disc whose central portion is passed through by the protruding shaft portion 23a. In the outer peripheral portion of the slide plate 124, there are provided a plurality of bolt passing elongated holes 127 extending in the direction in which the second rope holding member 93 is displaced. A plurality of stopper bolts 128 mounted to the mounting member 122 are passed through the bolt passing elongated holes 127. As a result, with respect to the mounting member 122, the slide plate 124 is displaceable in the length direction of the bolt passing elongated holes 127 but is fixed in the circumferential direction of the slide plate 124.

[0102] The pressing device 125 is capable of rotating integrally with the protruding shaft portion 23a. Further, the pressing device 125 has a belleville spring (urging member) 129 urging the rotary member 123 in the direction in which the rotary member 123 is pressed against the slide plate 124, and a detachment prevention plate 130 for preventing detachment of the belleville spring 129 from the protruding shaft portion 23a. The belleville spring 129 is contracted between the detachment prevention plate 130 and the rotary member 123.

[0103] The rotary member 123 has a rotary member main body 131 and a friction member 132 provided on the rotary member main body 131 and held in contact with the slide plate 124. The rotary member 123 is constantly pressed against the slide plate 124 by the pressing device 125 while held in contact with the slide plate 124. As a result, a frictional force is constantly generated between the slide plate 124 and the friction member 132. The rotation of the second rotation shaft 23 and the second roller 24 is braked by the frictional force generated between the slide plate 124 and the friction member 132. The magnitude of the frictional force generated between the slide plate 124 and the friction member 132 is set to be smaller than the magnitude of the frictional force generated between each of the first roller 22 and the second roller 24, and the main ropes 9. The rest of the construction and operation of this embodiment is same as that of Embodiment 4.

[0104] In this way, the rotation of the first roller 22 is always braked by the brake device 103, and the rotation of the second roller 24 is always braked by the brake device 121, so the braking force imparted to the main ropes 9 can be shared by the brake device 103 and the brake device 125, making it possible to achieve a reduction in the size of each of the brake device 103 and the brake device 121.

[0105] While in the above-mentioned embodiments the control of the rope brake device by the control device 14 is operated to brake the movement of the main ropes 9 only at the time of normal stopping of the car 10, it is also possible to brake the movement of the main ropes 9 at the time of emergency, for example, when the safety device for preventing fall of the car 10 operates.

Claims

1. A rope brake device for an elevator, comprising:

a rope holding device having a first rope holding member including a first roller and a second rope holding member including a second roller, a main rope for suspending a car being held between the first rope holding member and the second rope holding member, the first roller and the second roller being respectively rotated as the main rope moves, and at least one of the first roller and the second roller serving as a brake roller; and

a brake device having a rotary member rotated integrally with the brake roller, a brake member displaceable between a contact position where the brake member is in contact with the rotary member and a separated position where the brake member is separated from the rotary member, and a brake member displacing device for displacing the brake member between the contact position and the separated position, the brake device braking the rotation of the rotary member and the brake roller by bringing the brake member into contact with the rotary member,

characterized in that the movement of the main rope is braked by braking the rotation of the brake roller.

2. A rope brake device for an elevator according to Claim 1, **characterized in that** the brake member displacing device displaces the brake member between the contact position and the separated position based on information from a control device for controlling the operation of an elevator.

3. A rope brake device for an elevator, comprising:

a first rope holding member including a first roller, a second rope holding member including a second roller and displaceable between an operating position where the second rope holding member is in contact with a main rope for suspending a car to press the main rope against the first rope holding member and a release position where the second rope holding member is separated from the main rope, and a rope holding member displacing device displacing the second rope holding member between the operating position and the release position, the first roller and the second roller being respectively rotated with movement of the main rope when the second rope holding member is at the operating position, and at least one of the first roller and the second roller serving as a brake roller; and

a brake device having a rotary member rotated integrally with the brake roller and a brake member to be held in contact with the rotary member for braking the rotation of the brake roller by bringing the brake member into contact with the rotary member,

characterized in that the movement of the main rope is braked by braking the rotation of the brake roller and displacing the second rope holding member to the operating position.

4. A rope brake device for an elevator according to Claim 3, **characterized in that** the rope holding member displacing device displaces the second rope holding member between the operating position and the release position based on information from a control device for controlling the operation of an elevator.

5. A rope brake device for an elevator according to any one of Claims 1 to 4, **characterized in that** the first roller and the second roller rotate while in contact with the main rope.

6. A rope brake device for an elevator according to Claim 5, **characterized in that** a frictional force between the brake roller and the main rope is larger than a braking force imparted to the rotary member by the brake device.

7. A rope brake device for an elevator according to any one of Claims 1 to 6, **characterized in that**:

the first rope holding member has the plurality of first rollers; and

the second rope holding member has the plurality of second rollers.

8. A rope brake device for an elevator according to any one of Claims 1 to 4, **characterized in that**:

the first rope holding member has the plurality of first rollers and a first endless belt looped around the first rollers so that the first endless belt collectively surrounds the first rollers;

the second rope holding member has the plurality of second rollers, and a second endless belt looped around the second rollers so that the second endless belt collectively surrounds the second rollers; and

the main rope is held between the first endless belt and the second endless belt.

9. A rope brake device for an elevator according to Claim 8, **characterized in that** a frictional force between an endless belt looped around the brake roller and the main rope is larger than a braking force imparted to the rotary member by the brake device.

FIG. 1

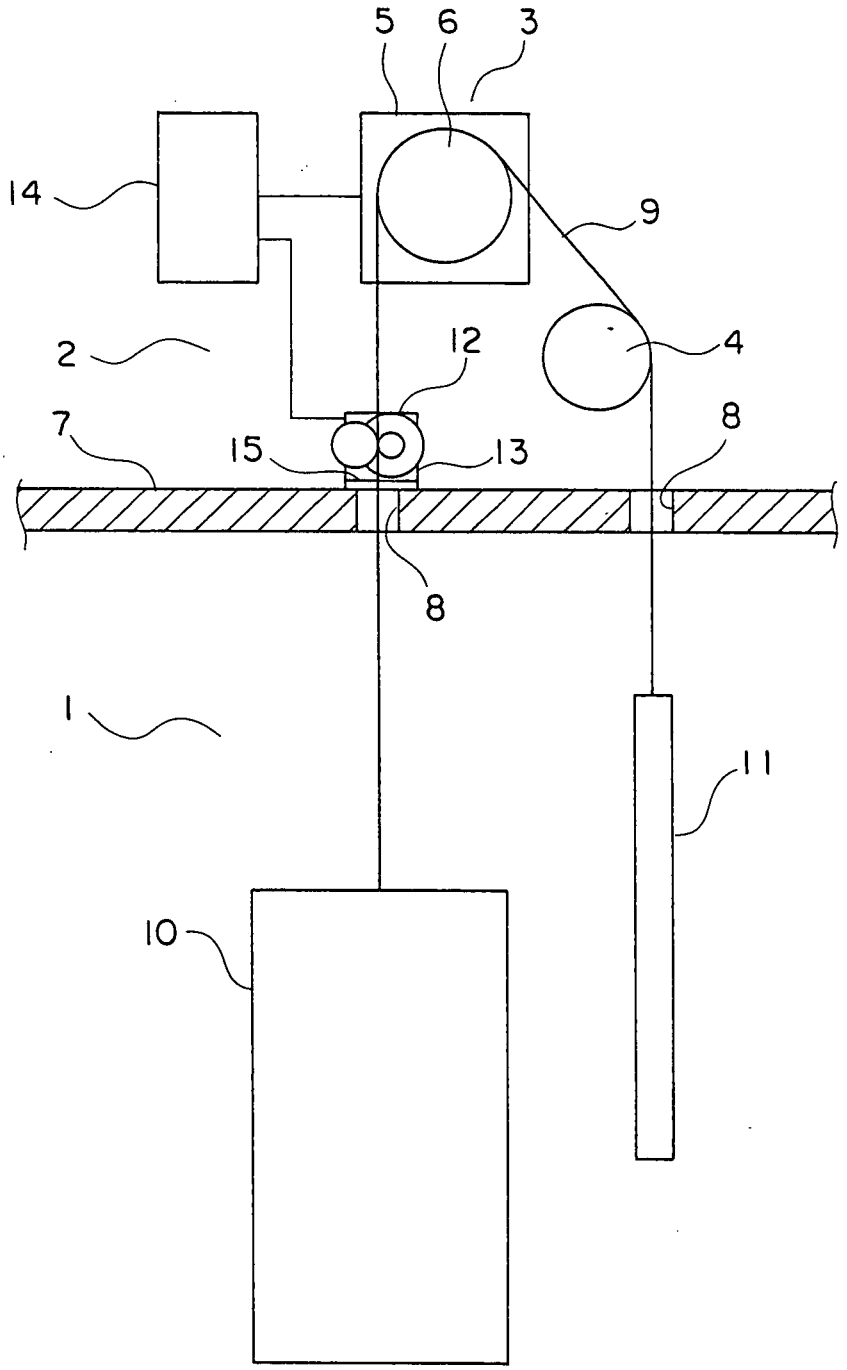

FIG. 2

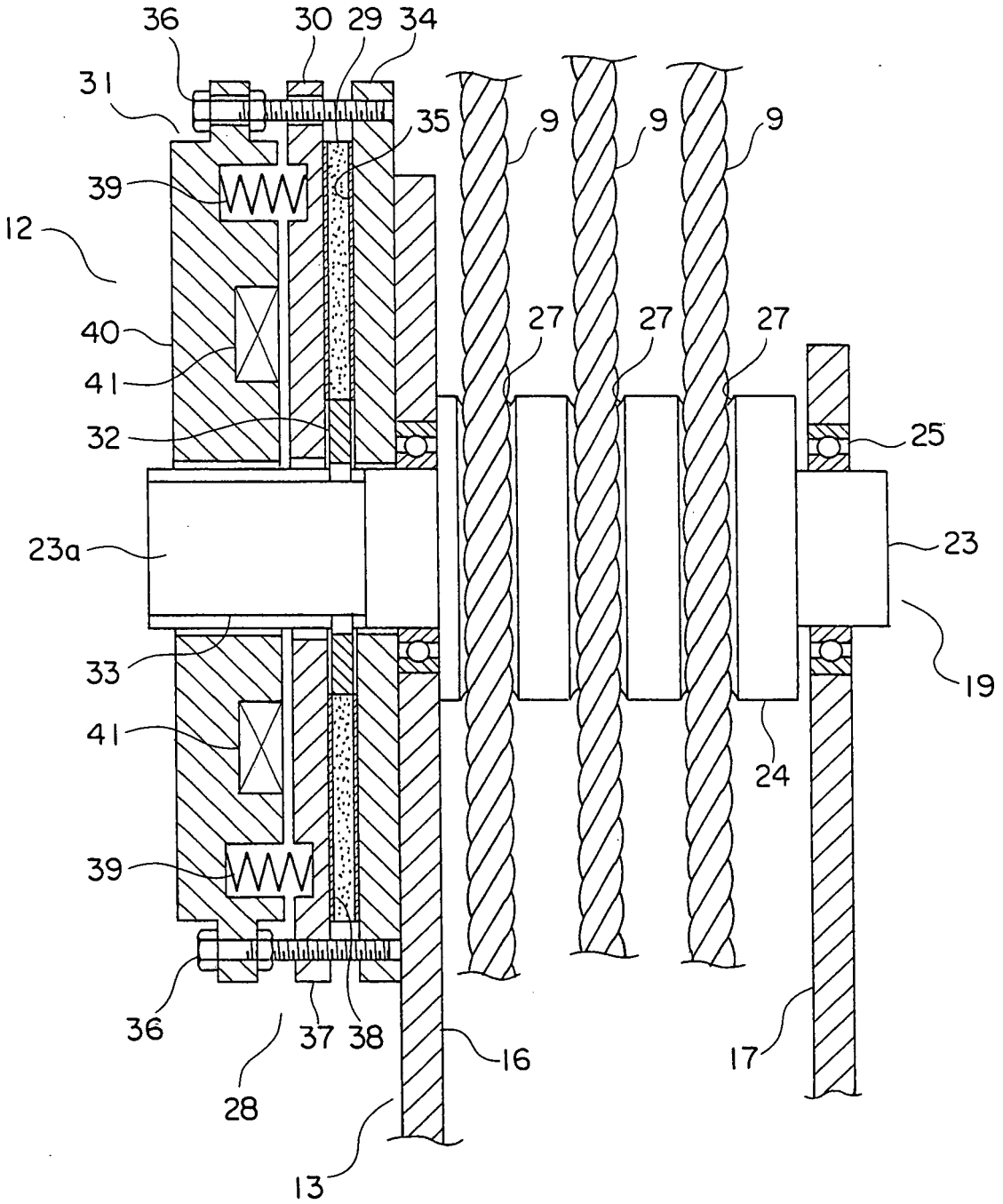
36
30
29
34
31
35
9
9
9
39
12
27
27
27
40
41
32
25
23a
23
33
19
41
24
39
36
37
38
16
17
28
13

FIG. 3

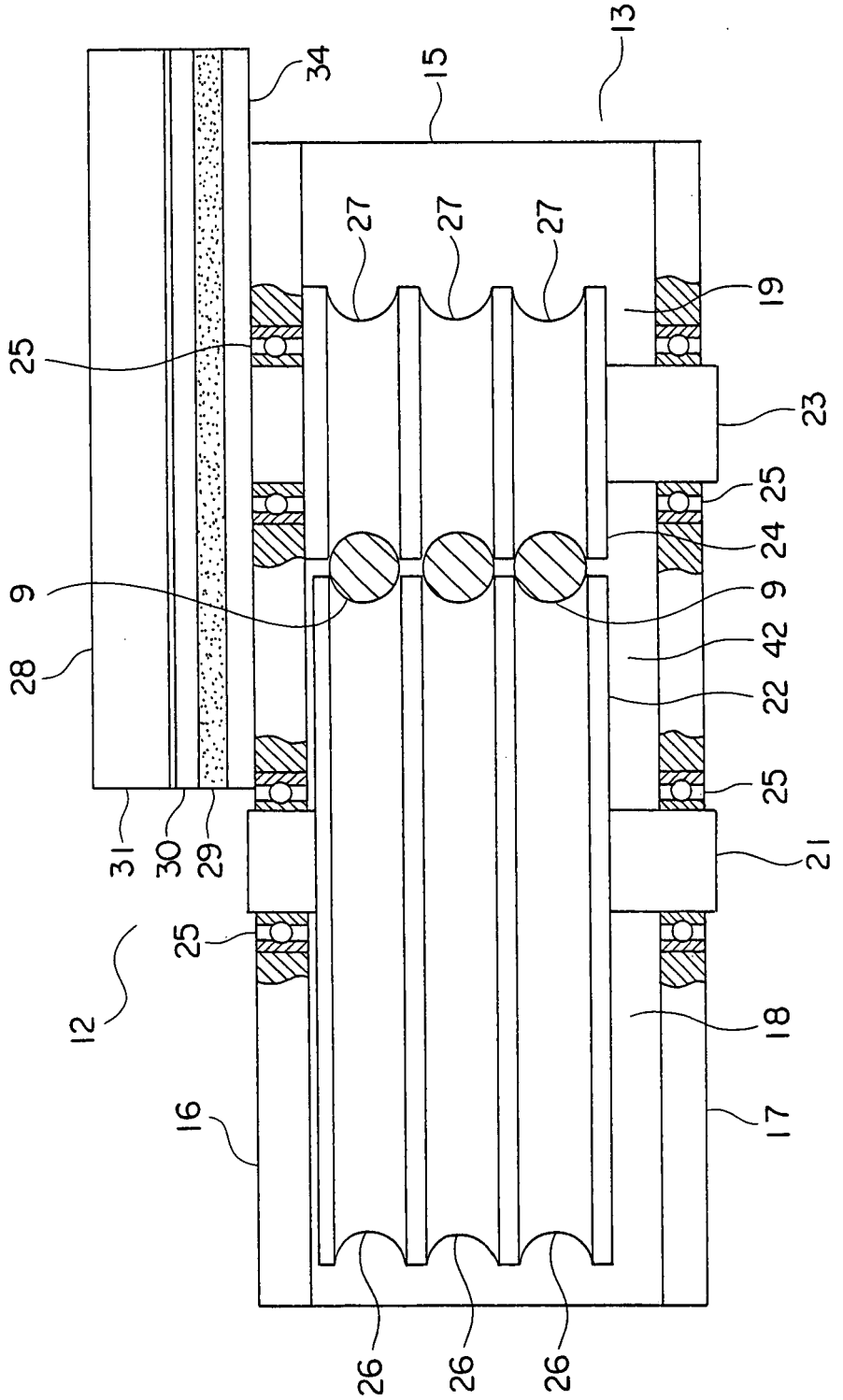
34
15
13
27
27
27
19
25
23
25
24
9
9
42
28
22
25
21
31
30
29
25
12
18
16
17
26
26
26

FIG. 4

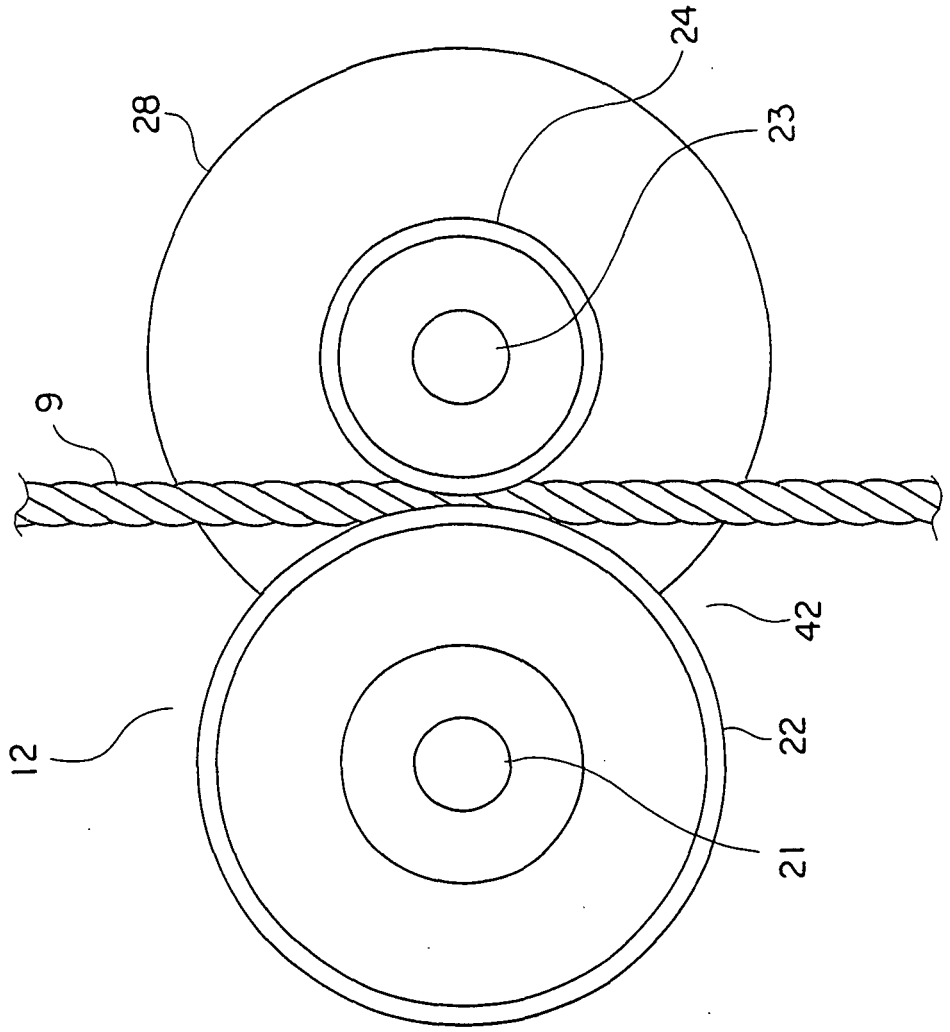

FIG. 5

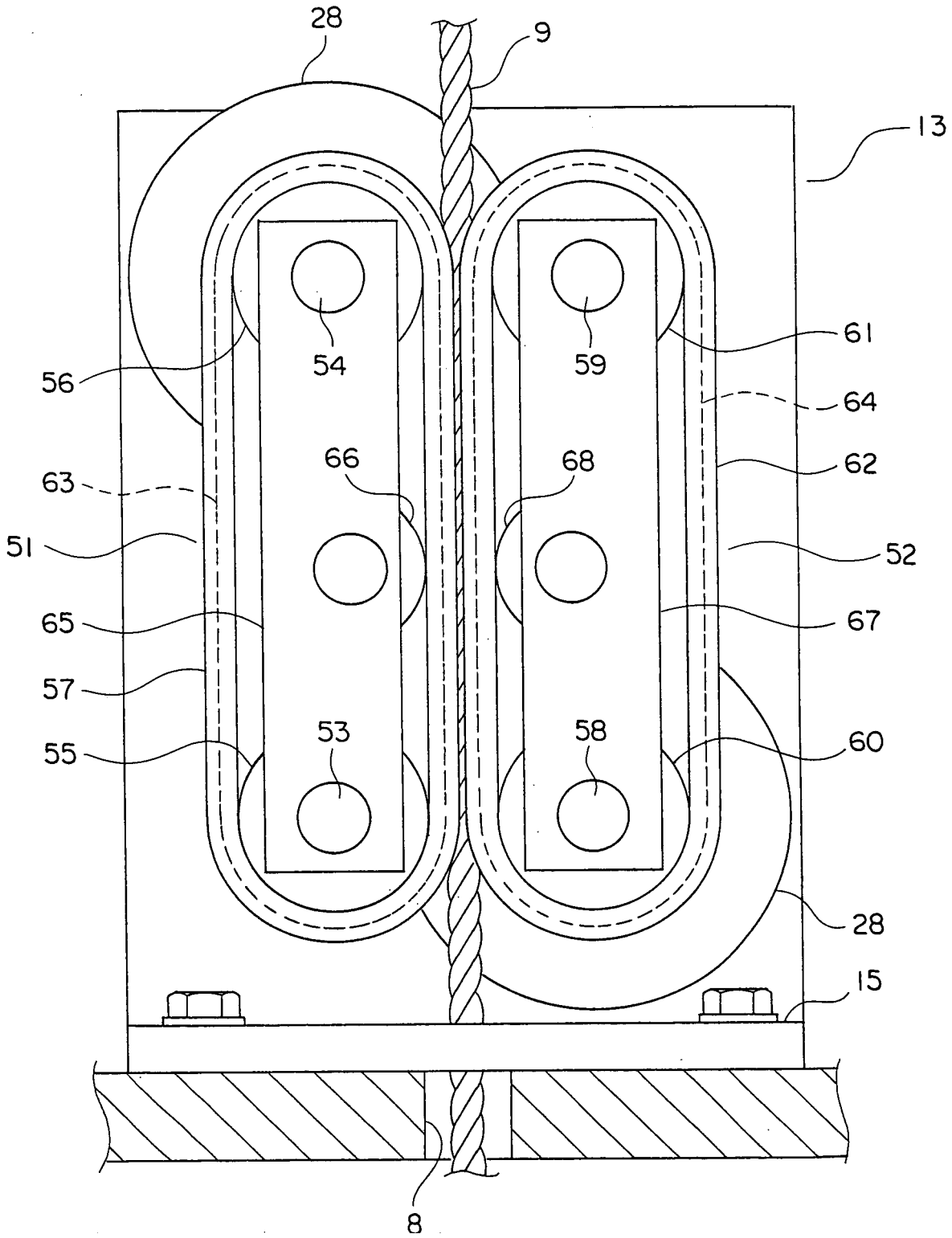

FIG. 6

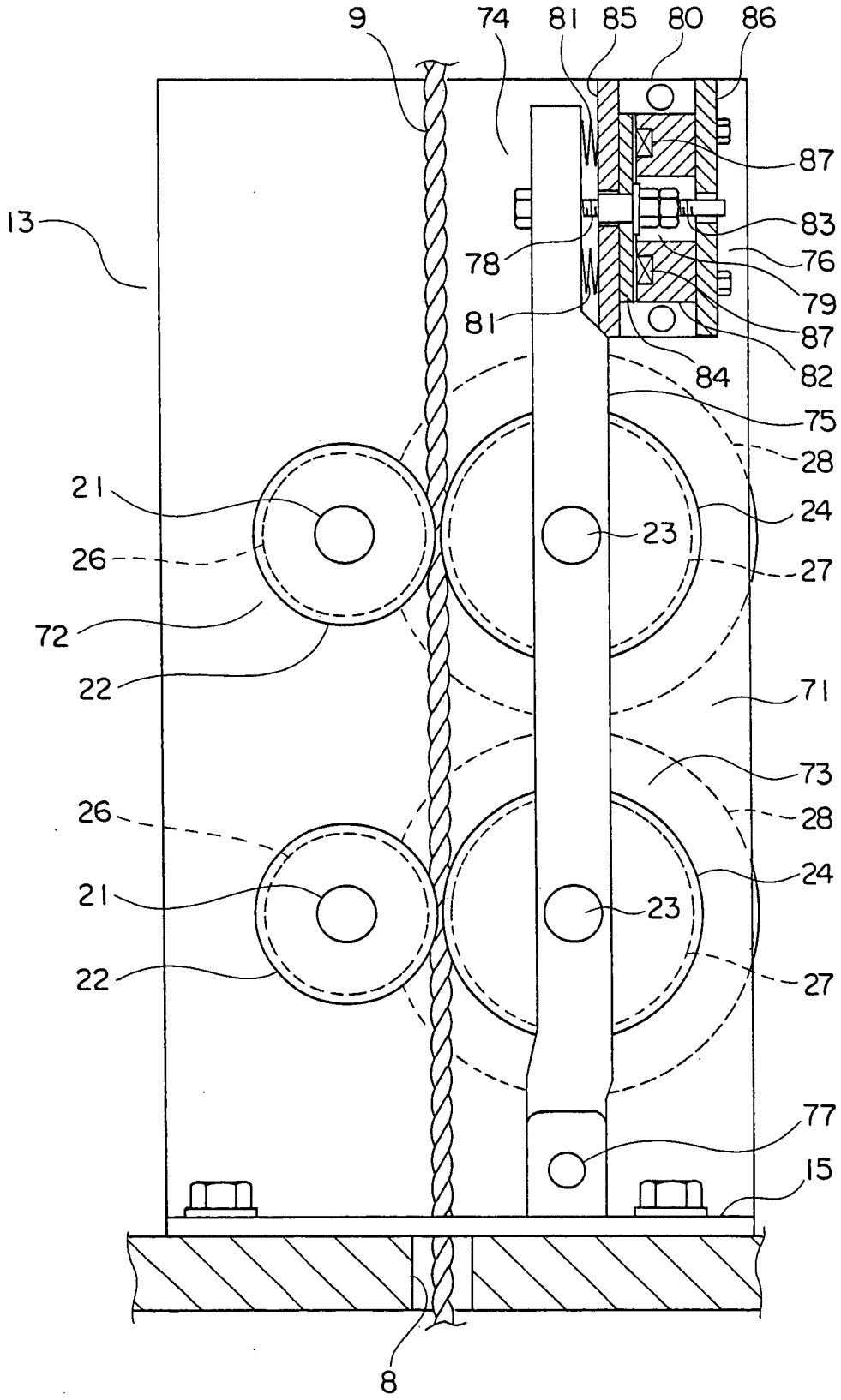
9
74
81
85
80
86
87
13
83
78
76
79
81
87
82
84
75
28
21
24
23
26
27
72
22
71
73
26
28
21
24
23
22
27
77
15
8

FIG. 7

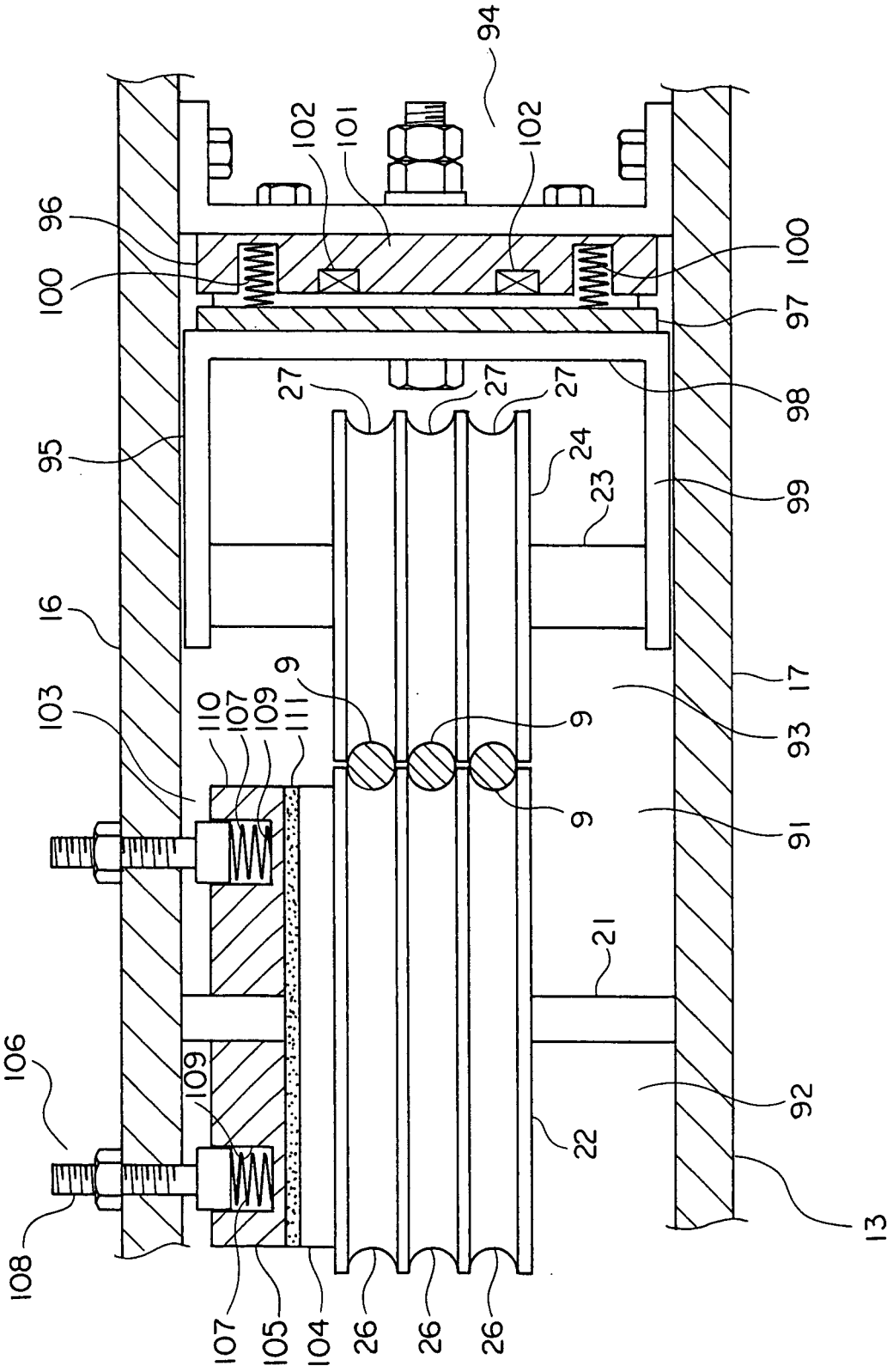
94
102
101
102
96
100
100
97
27
27
27
98
95
24
23
99
16
9
103
110
107
109
111
9
9
17
93
91
21
106
109
92
22
108
13
107
105
104
26
26
26

FIG. 8

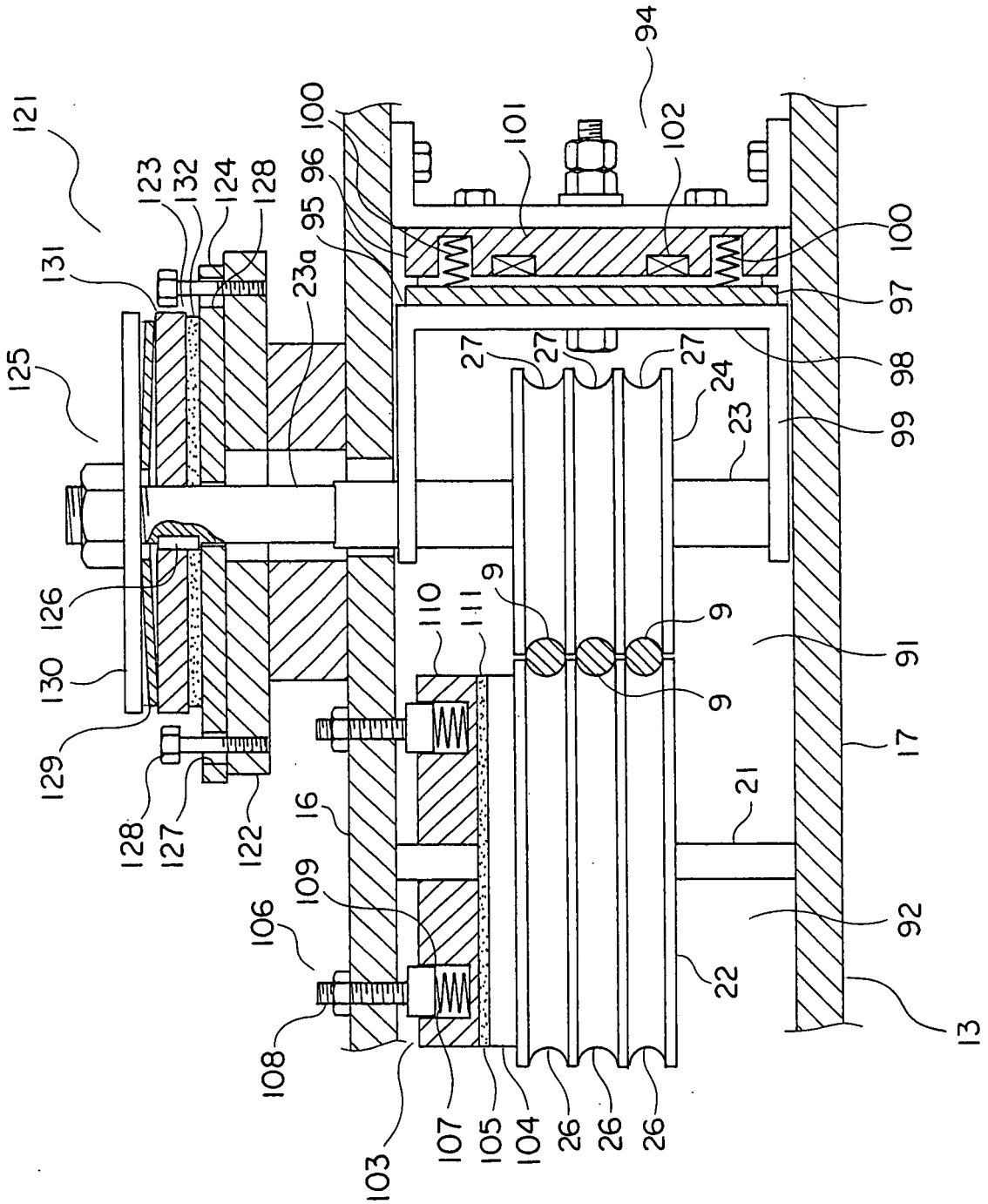
121
123
132
124
128
131
125
126
130
129
128
127
122
23a
100
96
95
101
102
94
100
97
98
99
27
27
27
24
23
9
9
9
110
111
91
17
21
16
109
106
108
103
107
105
104
26
26
26
22
92
13

INTERNATIONAL SEARCH REPORT

International application No.
PCT/JP2005/011133

A. CLASSIFICATION OF SUBJECT MATTER
B66B5/24(2006.01)

According to International Patent Classification (IPC) or to both national classification and IPC

B. FIELDS SEARCHED

Minimum documentation searched (classification system followed by classification symbols)
B66B1/00(2006.01)-***B66B11/08***(2006.01)

Documentation searched other than minimum documentation to the extent that such documents are included in the fields searched
Jitsuyo Shinan Koho 1922-1996 Jitsuyo Shinan Toroku Koho 1996-2006
Kokai Jitsuyo Shinan Koho 1971-2006 Toroku Jitsuyo Shinan Koho 1994-2006

Electronic data base consulted during the international search (name of data base and, where practicable, search terms used)

C. DOCUMENTS CONSIDERED TO BE RELEVANT

Category*	Citation of document, with indication, where appropriate, of the relevant passages	Relevant to claim No.
X Y A	JP 2003-252552 A (Fujitec Co., Ltd.), 10 September, 2003 (10.09.03), Par. Nos. [0011] to [0016]; Figs. 1 to 4 (Family: none)	1-2 7-9 3-6
Y	WO 02/064482 A1 (Fujitec Co., Ltd.), 22 August, 2002 (22.08.02), Description, page 10, line 9 to page 12, line 16; Figs. 1 to 6 & CA 2438037 A & EP 1367019 A1 & US 2004/0050627 A1 & CN 1491181 A	7-9
A	JP 59-212371 A (Toshiba Corp.), 01 December, 1984 (01.12.84), Claims; Figs. 1 to 2 (Family: none)	3-4

☒ Further documents are listed in the continuation of Box C. ☐ See patent family annex.

* Special categories of cited documents:
"A" document defining the general state of the art which is not considered to be of particular relevance
"E" earlier application or patent but published on or after the international filing date
"L" document which may throw doubts on priority claim(s) or which is cited to establish the publication date of another citation or other special reason (as specified)
"O" document referring to an oral disclosure, use, exhibition or other means
"P" document published prior to the international filing date but later than the priority date claimed
"T" later document published after the international filing date or priority date and not in conflict with the application but cited to understand the principle or theory underlying the invention
"X" document of particular relevance; the claimed invention cannot be considered novel or cannot be considered to involve an inventive step when the document is taken alone
"Y" document of particular relevance; the claimed invention cannot be considered to involve an inventive step when the document is combined with one or more other such documents, such combination being obvious to a person skilled in the art
"&" document member of the same patent family

Date of the actual completion of the international search	Date of mailing of the international search report
15 March, 2006 (15.03.06)	20 March, 2006 (20.03.06)
Name and mailing address of the ISA/ Japanese Patent Office Facsimile No.	Authorized officer Telephone No.

Form PCT/ISA/210 (second sheet) (April 2005)

INTERNATIONAL SEARCH REPORT

International application No.
PCT/JP2005/011133

C (Continuation). DOCUMENTS CONSIDERED TO BE RELEVANT

Category*	Citation of document, with indication, where appropriate, of the relevant passages	Relevant to claim No.
A	JP 4-361966 A (Mitsubishi Electric Corp.), 15 December, 1992 (15.12.92), Par. Nos. [0011] to [0014]; Figs. 1 to 2 (Family: none)	4-5
A	JP 2-66092 A (Hitachi Elevator Service Kabushiki Kaisha), 06 March, 1990 (06.03.90), Claims; Figs. 1 to 3 (Family: none)	5

Form PCT/ISA/210 (continuation of second sheet) (April 2005)

REFERENCES CITED IN THE DESCRIPTION

This list of references cited by the applicant is for the reader's convenience only. It does not form part of the European patent document. Even though great care has been taken in compiling the references, errors or omissions cannot be excluded and the EPO disclaims all liability in this regard.

Patent documents cited in the description

- JP 7509212 A **[0003]**