C. A. DIES.

WRENCH.

APPLICATION FILED FEB. 9, 1914. RENEWED MAR. 5, 1915.

1,155,136.

Patented Sept. 28, 1915.

2 SHEETS—SHEET 1.

Fig. 1

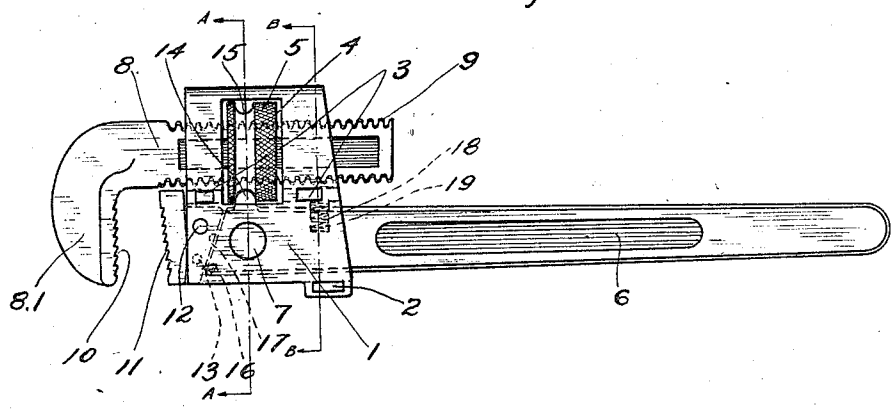

Fig. 2 (AA)

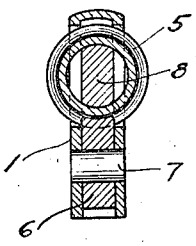

Fig. 4

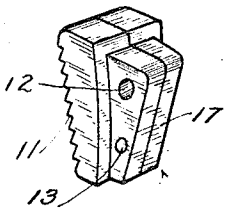

Fig. 3 (BB)

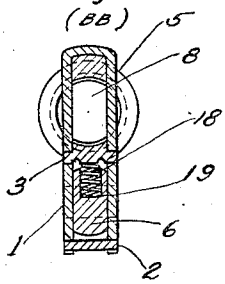

Fig. 5

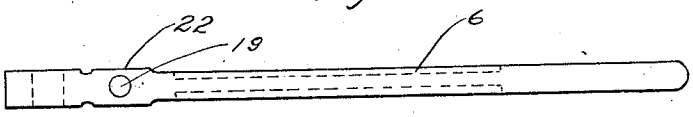

Witnesses:

Walter F. Stone.

Robert S. Martin

Inventor:

Charles A. Dies,

By Rummler & Rummler,

Attys

C. A. DIES.

WRENCH.

APPLICATION FILED FEB. 9, 1914. RENEWED MAR. 5, 1915.

1,155,136.

Patented Sept. 28, 1915.

2 SHEETS—SHEET 2.

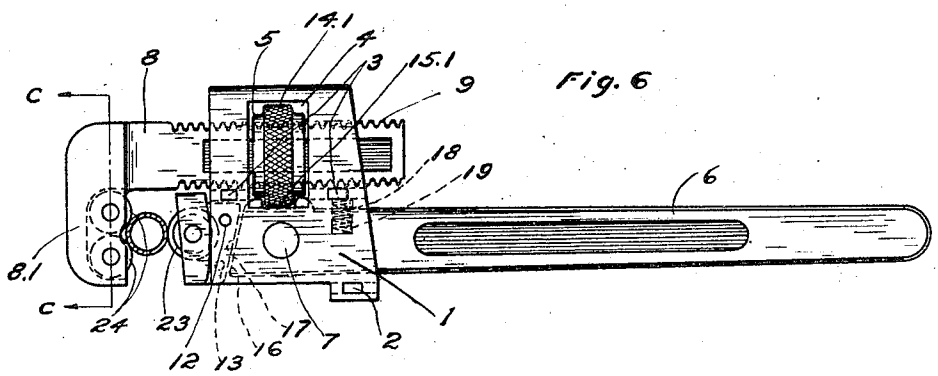

Fig. 6

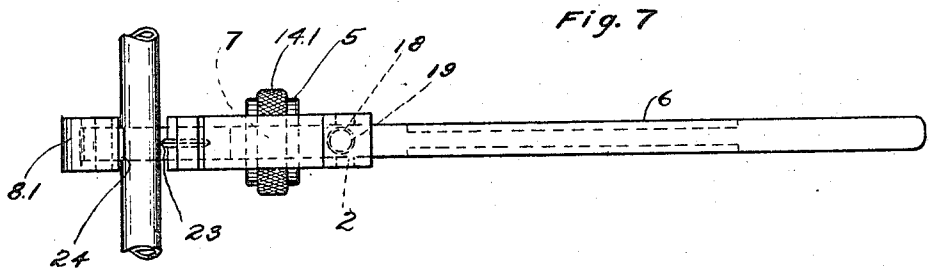

Fig. 7

Fig. 8

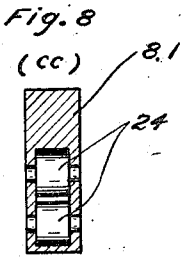

Witnesses:

Walter F. Stone

Robert S. Smarton

Inventor:

Charles A. Dies,

By Rummler & Rummler,

Attys.

UNITED STATES PATENT OFFICE.

CHARLES ALBIN DIES, OF CHICAGO, ILLINOIS.

WRENCH.

1,155,136. Specification of Letters Patent. Patented Sept. 28, 1915.

Application filed February 9, 1914, Serial No. 817,549. Renewed March 5, 1915. Serial No. 12,409.

To all whom it may concern:

Be it known that I, CHARLES ALBIN DIES, a citizen of the United States of America, and a resident of Chicago, county of Cook, and State of Illinois, have invented certain new and useful Improvements in Wrenches, of which the following is a specification.

This invention relates to that type of pipe and other wrenches in which a manual pull on the handle forces a pivoted jaw member to the work. And the present improvement has for its object to provide a simple and efficient structural formation and arrangement of parts, whereby a sliding movement of one jaw and a pivotal movement of a companion jaw of the wrench are simultaneously effected by a pull on the wrench handle, and with an absence of a thrust stress upon the intermediate housing which carries the jaws aforesaid all as will hereinafter more fully appear.

An illustrative embodiment of this invention is shown in the accompanying drawings, in which—

Figure 1 is a side elevation of a pipe wrench embodying the improvements set forth. Fig. 2 is a transverse sectional detail of the same taken on the line A—A of Fig. 1. Fig. 3 is a similar view taken on the line B—B of Fig. 1. Fig. 4 is a perspective view of one of the jaws. Fig. 5 is a plan view of the lever. Fig. 6 is a side elevation of a pipe cutter embodying the improvements set forth. Fig. 7 is a bottom plan view of the same. Fig. 8 is a transverse sectional detail taken on the line C—C of Fig. 6.

In the construction shown in the drawings, the body member or housing 1 is formed preferably of sheet metal bent substantially U-shaped and secured together at the ends thereof by means of a transverse plate 2 and secured intermediate of its ends by means of the transverse plates 3. The member has a recess 4 within which is located the rotatable member or adjusting nut 5.

An operating arm or lever 6 has its inner end located within the U-shaped member and pivotally connected thereto by means of a pin 7. A bar 8 is shiftably mounted within the U-shaped member 1 on the opposite side of the plates 3 from the lever 6. The upper and lower edges of bar 8 are provided with threads 9 which are engaged by the threaded member or nut 5 whereby the rotation of said member will cause said bar to be moved along the lever 6.

The tool is provided with gripping members which are adapted to be forced together to engage the work. The form of these members will of course vary in different kinds of tools. In the pipe wrench illustrated in the drawings these members are in the form of serrated jaws. The jaw 10 is integrally formed on the transverse part 8.1 of the bar 8 and opposed to the jaw 11 which is pivotally connected to the supporting member 1 by means of the pin 12. The jaw 11 is formed of two L-shaped parts which are connected together by means of a rivet 13 as shown in Fig. 4. In another tool such as the pipe cutter shown herein the gripping members would be in the shape of a rotary cutter 23 rotatably supported on the jaw 11, and rollers 24 journaled in the transverse part 8.1 of the bar 8.

The lever 6 is shaped to interfit with the nut 5 so that the power is applied to the nut directly. As shown on the pipe wrench the lever has a radially disposed rib or lug 14 of the width of the lever 6 and which extends into an annular groove 15 formed in the rotatable member or nut 5. The tongue 14 has its end formed concave to fit the contour of the groove in the nut 5. As shown on the pipe cutter a groove or slot 15.1 is formed in the lever 6 and an annular shoulder or tongue 14.1 is formed on the nut 5. This connection between the lever 6 and rotatable member 5 causes the bar 8 to be shifted a short distance, through a swinging movement of the lever 6 and after the gripping members have been properly adjusted by means of the adjusting nut 5, so that as they are forced to grip the work the strain on the bar 8 is directed through the tongue and groove to the lever 6.

A cam 16 is formed on the lever 6 and adapted to bear upon the adjacent face 17 of the jaw 11 so that when the lever is swung to shift the bar 8 rearwardly the outer end of the jaw 12 is tilted toward the jaw 10.

A spring 18 is located in a recess 19 formed in the lever 6 and bears against the adjacent plate 3 so as to normally shift the lever for urging the gripping members toward each other so that in placing the wrench upon the work they will, if necessary yield slightly.

As shown in Fig. 5 the lever 6 is enlarged

at 22 in the vicinity of the recess 19 and the fulcrum pin.

The operation of the device shown is as follows: When it is desired to use the wrench the rotatable member 5 is turned until the jaws 10 and 11 both engage the work. A pull upon the lever 6 causes the tongue 14, which acts upon the rotatable member 5, to urge the bar 8 rearwardly, and causes the cam 16 to shift the outer end of the jaw 11 toward the jaw 10. By virtue of the connection of the lever 6 to the rotary member 5 and its connection to the bar 8, the strain on the jaw 10 is directed to the lever 6 thereby relieving the body member 1 from the thrust and strain which usually occurs in other wrenches of this general type. The pipe cutter is used in a similar manner as is obvious.

By reason of the fact that there is no tilting of the bar 8 as in other wrenches of this general type, it is possible to use the wrench for "backing off" a nut without the likelihood of its slipping free from the nut due to enlargement of the distance between the jaws 10 and 11. The play of the nut 5 in the recess 4 need only be enough to allow the jaws 10 and 11 to move a sufficient distance to cause the teeth to alternately grip and release a pipe as the lever 6 is rocked forward and back in the well-known manner as the pipe is turned.

Although but one specific embodiment of this invention has been herein shown and described, it will be understood that some of the details of the construction shown may be altered or omitted without departing from the spirit of this invention as defined by the following claims.

I claim:

1. A device of the class described, comprising a body member, a lever pivotally mounted on said member, jaws mounted on said member separately from said lever and being relatively movable in substantial alinement therewith, means connecting said lever with one of said jaws whereby said jaw is shifted longitudinally of said lever by a swinging movement thereof, and a cam carried by said lever and adapted to shift the other said jaw when said lever is swung and thereby force said jaws together.

2. A device of the class described, comprising a body member, a lever pivotally mounted on said member, jaws mounted on said member separately from said lever and being relatively movable in substantial alinement therewith, means connecting said lever with one of said jaws whereby said jaw is shifted longitudinally of said lever by a swinging movement thereof, the same comprising a transverse rib on said lever, a sleeve nut operatively associated with said rib and adjustably connected to said jaw by a screw-thread connection, and a cam carried by said lever and adapted to shift the other jaw when said lever is swung and thereby force said jaws together.

Signed at Chicago this 7th day of February, 1914.

CHARLES ALBIN DIES.

Witnesses:
RUDOW RUMMLER,
M. IRENE HUTCHINGS.