PCT WORLD INTELLECTUAL PROPERTY ORGANIZATION
International Bureau

INTERNATIONAL APPLICATION PUBLISHED UNDER THE PATENT COOPERATION TREATY (PCT)

(51) International Patent Classification 5 :		(11) International Publication Number:
G11B 23/20, 23/26	A1	WO 93/21634
		(43) International Publication Date: 28 October 1993 (28.10.93)

(21) International Application Number: PCT/US93/02690

(22) International Filing Date: 25 March 1993 (25.03.93)

(30) Priority data:
07/870,283 17 April 1992 (17.04.92) US

(71) Applicant: MINNESOTA MINING AND MANUFACTURING COMPANY [US/US]; P.O. Box 33427, St. Paul, MN 55133-3427 (US).

(72) Inventors: HOGE, David, Thomas ; 8431 Gray Street, Arvada, CO 80003-1331 (US). OWENS, John, Craig ; 7898 West 62nd Way, Arvada, CO 80004 (US). RAMBOSEK, George, Phillip ; 18105 Furuby Road, Shafer, MN 55074 (US).

(74) Agents: DUFT, Donald, M. et al.; Duft, Graziano & Forest, 1790 - 30th Street, Suite 140, Boulder, CO 80301-1018 (US).

(81) Designated States: JP, KR, NO, European patent (AT, BE, CH, DE, DK, ES, FR, GB, GR, IE, IT, LU, MC, NL, PT, SE).

Published
With international search report.

(54) Title: MAGNETIC TAPE CARTRIDGE HAVING SELF DOCKING LEADER BLOCK

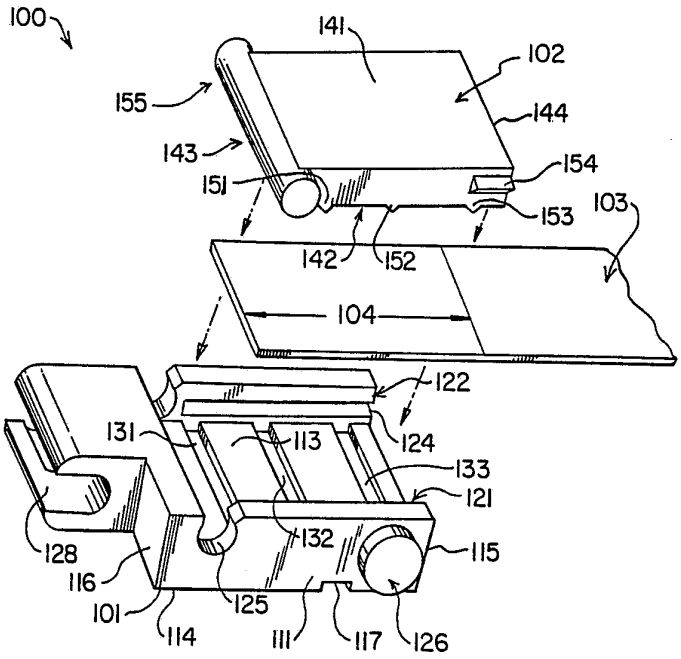

(57) Abstract

The magnetic tape cartridge having a self docking leader block makes use of guide slots formed in the interior surface of the top and bottom plates of the cartridge housing, juxtaposed to the leader block opening in the housing, to mate with corresponding projections on the leader block. The guide slots are open at one end to capture the projections on the leader block and shaped to precisely guide the leader block along a predefined path into the opening.

FOR THE PURPOSES OF INFORMATION ONLY

Codes used to identify States party to the PCT on the front pages of pamphlets publishing international applications under the PCT.

AT	Austria	FR	France	MR	Mauritania
AU	Australia	GA	Gabon	MW	Malawi
BB	Barbados	GB	United Kingdom	NL	Netherlands
BE	Belgium	GN	Guinea	NO	Norway
BF	Burkina Faso	GR	Greece	NZ	New Zealand
BG	Bulgaria	HU	Hungary	PL	Poland
BJ	Benin	IE	Ireland	PT	Portugal
BR	Brazil	IT	Italy	RO	Romania
CA	Canada	JP	Japan	RU	Russian Federation
CF	Central African Republic	KP	Democratic People's Republic of Korea	SD	Sudan
CG	Congo			SE	Sweden
CH	Switzerland	KR	Republic of Korea	SK	Slovak Republic
CI	Côte d'Ivoire	KZ	Kazakhstan	SN	Senegal
CM	Cameroon	LI	Liechtenstein	SU	Soviet Union
CS	Czechoslovakia	LK	Sri Lanka	TD	Chad
CZ	Czech Republic	LU	Luxembourg	TG	Togo
DE	Germany	MC	Monaco	UA	Ukraine
DK	Denmark	MG	Madagascar	US	United States of America
ES	Spain	ML	Mali	VN	Viet Nam
FI	Finland	MN	Mongolia		

MAGNETIC TAPE CARTRIDGE HAVING SELF DOCKING LEADER BLOCK

This invention relates to magnetic tape cartridges and, in particular, to an improved leader block that is attached to one end of the magnetic tape contained in the magnetic tape cartridge and which is self docking when the tape is rewound back into the cartridge.

PROBLEM

It is a problem in the field of 3480-type magnetic tape cartridges to provide a leader block that securely and precisely fastens to one end of the magnetic tape contained in the magnetic tape cartridge while also being simple to install on the magnetic tape without the use of complicated tools. A misalignment of the magnetic tape to the leader block can result in the cartridge and the leader block becoming jammed in the tape drive. Existing leader blocks in use on 3480-type magnetic tape cartridges require the use of special installation tools to attain the required alignment between the magnetic tape and the leader block which makes field installation of leader blocks on the 3480-type magnetic tape cartridges a difficult task.

These existing leader blocks are oriented such that the magnetic tape exits the leader block from the side. The side exit of the tape from the leader block places a strain on the magnetic tape

and can interfere with the fit between the leader block and the takeup reel. When the leader block is fully inserted into the takeup reel, the leader block forms a part of the outer circumference of the takeup reel and thus the magnetic tape winding surface. Any misalignment of the magnetic tape to the leader block or a failure to properly seat the leader block in the takeup reel results in a non-uniform tape winding surface which causes undesirable impressions in the magnetic tape as it is wrapped on the takeup reel. Finally, special leader block docking mechanisms must be employed on the tape drive in order to smoothly seat the leader block in the magnetic tape cartridge.

While this existing leader block apparatus is fairly reliable in its operation, the above noted limitations represent detrimental design limitations contained therein.

SOLUTION

The above described problems are solved and a technical advance achieved in the field by the magnetic tape cartridge having a self docking leader block that has opposing projections or docking pins on the top and bottom that mate with corresponding channels in the opening of the cartridge to automatically guide the leader block into the opening. This leader block is simple to install without the use of complex installation tools to thereby enable field personnel to affix a leader block to a magnetic tape cartridge. This leader block also orients the magnetic tape to exit the leader block through one end thereof in order to minimize the strain on the magnetic tape and to avoid undesirable impressions on the magnetic tape as it is wrapped on the takeup reel. The leader block preferably has a substantially rectangular body that is preferably equipped with two tape guide projections or walls which form, in conjunction with the front of the body, a U-shaped channel open at one end and adapted to receive the end of the magnetic tape that extends through the opening in the housing of the magnetic tape cartridge. The size and shape of this U-shaped channel substantially corresponds to the dimensions of the magnetic tape in order to precisely align the magnetic tape within the channel and with reference to the leader block body. The section of the front of the leader block body that constitutes the bottom of the U-shaped channel preferably includes either one or a plurality of parallel oriented, spaced apart grooves inscribed therein. These grooves extend from the top tape guide projection to the bottom tape guide projection and receive corresponding projections on the surface of the cover of the leader block. The cover

preferably fits into the U-shaped channel once the magnetic tape has been placed therein to sandwich the magnetic tape between the cover and the body of the leader block. The projections on the cover force the magnetic tape into the corresponding grooves in the face of the leader block body in order to thereby prevent the movement of the end of the magnetic tape with reference to the body of the leader block. The magnetic tape exits the centerline of the leader block to enable the tape threading arm to pull the leader block in a straight line with the magnetic tape rather than at an angle as with existing side exit leader blocks. The centerline tape exit also allows the leader block to clear a narrow tape threading path in the tape drive.

A preferred embodiment of the leader block uses a pin and socket arrangement to pivotally interconnect one end of the cover to the body of the leader block in a position to enable the cover to close into the U-shaped channel. The cover in the preferred embodiment is snap fit into this channel by means of at least one notch placed on the top and bottom tape guide projections. These notches mate with corresponding tabs on the cover in order to enable the cover to snap fit securely to the body of the leader block.

The end of the leader block body opposite the open end of the channel includes a socket adapted to receive the tape threading arm leader block pin in order to enable the tape threading arm to grasp the leader block securely and extract the magnetic tape from the magnetic tape cartridge. A notch is also optionally provided on the back of the leader block body to engage a leader block latch mechanism contained in the magnetic tape cartridge.

In the self docking leader block of the present invention, a pair of docking pins are preferably included on the top and bottom of the body of the leader block, juxtaposed to the magnetic tape threading end, in order to guide the leader block into the opening in the magnetic tape cartridge when the magnetic tape is rewound on the magnetic tape cartridge reel. The cartridge includes a pair of channels formed in the inside surface of the top and bottom plates of the cartridge housing. These channels are positioned juxtaposed to the opening to receive the docking pins, guide the leader block into the opening and provide a mechanical stop to seat the leader block in the opening. The channels are open at one end to capture the leader block docking pins and curved in shape to guide the leader block through a predetermined path into the opening. The docking pins also guide the leader block into the takeup reel during the magnetic tape threading operation. The use of the channels, formed in the top and bottom plates of the housing to mate with corresponding projections on the leader block, provides a magnetic tape cartridge that precisely controls the docking of the leader block therein. This structure obviates the need for docking alignment mechanisms in the tape threading apparatus of the tape drive.

BRIEF DESCRIPTION OF THE DRAWING

Figure 1 illustrates an exploded perspective view of the leader block of the present invention;

Figure 2 illustrates an end perspective view of the assembled leader block;

Figure 3 illustrates a perspective view of the magnetic tape cartridge;

Figures 4 and 5 illustrate a leader block latch mechanism contained in the magnetic tape cartridge;

Figure 6 illustrates a top view of the magnetic tape cartridge; and

Figure 7 illustrates a perspective exploded view of the magnetic tape cartridge.

DETAILED DESCRIPTION

One type of computer system tape transport presently in use makes use of the IBM 3480-type magnetic tape cartridge as the data storage media. The 3480-type magnetic tape cartridge consists of a substantially rectangular exterior housing that contains a single reel of magnetic tape with a leader block affixed to one end of the magnetic tape. The leader block is exposed through an opening in the exterior housing of the magnetic tape cartridge for use by an associated tape drive to retrieve the magnetic tape from the magnetic tape cartridge. A tape threading arm in the tape drive grasps the leader block to extract the magnetic tape through the opening in the one corner of the magnetic tape cartridge and transport the leader block along a tape threading path to be inserted into the takeup reel of the tape drive.

The external dimensions and architecture of the 3480-type magnetic tape cartridge are an industry standard, as is the tape threading arm leader block pin that is used to grasp the leader block. The leader block illustrated in Figures 1 and 2 interfaces to equivalent elements and details of the magnetic tape cartridge and tape threading arm leader block pin are omitted for the sake of brevity.

Leader Block Body

Figure 1 illustrates an exploded perspective view of the leader block 100 of the present invention and Figure 2 illustrates an end perspective view of leader block 100 in its assembled form. Leader block 100 consists of a body 101 and a cover 102 which function, when interconnected as illustrated in Figure 2, to sandwich magnetic tape 103 therebetween in order to

securely and precisely fasten leader block 100 to magnetic tape 103. It is critical to the reliable operation of the magnetic tape cartridge 300 (Figure 3) to have leader block 100 precisely oriented with respect to magnetic tape 103 and securely fastened thereto. Therefore, leader block 100 must be self aligning with reference to magnetic tape 103 as well as securely fastened thereto. This is accomplished without the use of fasteners or the need for a special assembly mechanism by means of the simple snap fit, self aligning design of leader block 100.

Magnetic tape 103 has a first end 104 which extends through the opening 301 in the magnetic tape cartridge 300 to enable the associated tape drive to extract magnetic tape 103 from the magnetic tape cartridge 300 by means of leader block 100 which is attached to magnetic tape 103 at first end 104. Leader block 100 includes body 101 that has a top 111, a bottom 112, a front 113, a back 114, a first side 115 and a second side 116. The top 111 and bottom 112 of body 101 include a first tape guide projection 121 and a second tape guide projection 122, respectively, which are extensions of top 111 and bottom 112 that protrude over the front 113 of body 101. First tape guide projection 121, front 113 and second tape guide projection 122 in combination form a substantially U-shaped channel open at one end and adapted to receive the first end 104 of magnetic tape 103. The dimensions of the first tape guide projection 121 and the second tape guide projection 122 are such that the U-shaped channel formed therebetween substantially matches the physical dimensions of the first end 104 of magnetic tape 103. Magnetic tape 103 exits first side 115 of leader block 100 substantially at the centerline C-C of first side

115. This allows the tape threading arm to pull leader block 100 in a straight line with magnetic tape 103. The straight line pull of leader block 100 also provides a narrow cross section profile to the tape threading path and permits the use of a narrower tape threading path than presently used.

Leader Block Assembly

In the assembly of leader block 100, a craftsperson places first end 104 of magnetic tape 103 in the bottom of U-shaped channel (described above) coplanar with and juxtaposed to front 113 of body 101. The U-shaped channel precisely aligns body 101 with the long dimension of magnetic tape 103 such that the top and bottom edges of magnetic tape 103 are parallel to top 111 and bottom 112 of leader block 100. A plurality of parallel oriented spaced apart grooves 131 - 133 are inscribed in the front 113 of body 101 in the bottom of the U-shaped channel. These grooves 131 - 133 illustrated in Figure 1 are shown as rectangular shaped channels although their number (at least one), precise geometry and dimensions are a matter of engineering choice and alternatively can be V-shaped grooves or semi-cylindrical troughs. These plurality of grooves 131 - 133 extend substantially along the full width of the U-shaped channel from first tape guide projection 121 to second tape guide projection 122. Cover 102 of leader block 100 includes a like plurality of parallel oriented spaced apart projections 151 - 153 that mate with grooves 131 - 133. Thus, when cover 102 and body 101 are interconnected as illustrated in Figure 2, the projections 151 - 153 force sections of magnetic tape 103 into the corresponding grooves 131 - 133 to form a lock mechanism to securely fix first end 104 of magnetic tape 103 within leader

block 100. The use of the rectangular shaped grooves 131 - 133 and triangular projections 151 - 153 cause magnetic tape 103 to be rigidly connected to leader block 100.

Leader Block Cover

The interconnection of cover 102 and body 101 in the preferred embodiment is accomplished by means of both tab and notch as well as pin and socket mechanisms. These two mechanisms are illustrative of a simple way to snap fit body 101 and cover 102 together, although there are other mechanical interconnections that are alternatives to those illustrated herein. Cover 102 includes a pin 155 located at a first end 143 thereof, which pin 155 is insertable into socket 125 located proximate to the second side 116 of body 101. The pin 155 of cover 102 is snapped into socket 125 thereby enabling cover 102 to hingeably pivot about the pin and socket joint to simplify the mechanical interconnection of cover 102 and body 101. Once cover 102 is hingeably connected to body 101, the opening between front 113 of body 101 and back 142 of cover 102 at the first side 115 of body 101 constitutes an aperture located at the centerline of leader block 100 and adapted to receive first end 104 of magnetic tape 103. The size of this aperture is a function of the position of cover 102 and the second end 144 of cover 102 can be closed to come into contact with body 101 such that back surface 142 of cover 102 sandwiches first end 104 of magnetic tape 103 to front 113 of body 101. The locking of cover 102 to body 101 is completed by the use of tabs 154 located on the top and bottom of cover 102, which tabs interconnect with notches 123 and 124 located on first tape guide projection 121 and second tape guide projection 122,

respectively. As illustrated in Figure 1, tab 154 is a triangular shaped element while notches 123 and 124 are V-shaped grooves adapted to receive tabs 154. The exact geometry of tabs 154 and notches 123, 124 are illustrative and not intended to limit the applicability of the concept illustrated herein. The notches 123, 124 extend lengthwise along a section of first tape guide projection 123 and second tape guide projection 122, and the exact length of tab 154 on cover 102 is a matter of design choice and must be sufficient to securely interlock cover 102 with body 101.

Additional Leader Block Features

Leader block 100 also includes a tape threading arm socket 128 located at the second side 116 thereof, which tape threading arm socket 128 is adapted to receive a tape threading arm pin. The tape threading arm socket 128 comprises a substantially semi-cylindrical socket extending from the top 111 of body 101 a significant portion of the way towards bottom 112 of body 101.

Also included in leader block 100 is a pair of substantially cylindrical docking pins 126, 127 which function to align leader block 100 with the opening 301 in the magnetic tape cartridge 300 (Figure 3). Docking pins 126, 127 are located on the top 111 and bottom 112 of body 101 and located proximate to the first side 115 thereof. As the magnetic tape 103 is withdrawn into the magnetic tape cartridge 300, the first side 115 of leader block 100 reaches the opening 301 in the magnetic tape cartridge 300, causing docking pins 126, 127 to encounter the open end of guide slots 302. Guide slots 302 are shaped to guide the first side 115 of leader block 100 into this opening 301 in order to enable leader block 100 to seat in the

opening 301 in the magnetic tape cartridge 300. Guide slots 302 are typically located on the inside surfaces of both the top and bottom sides of magnetic tape cartridge 300. Guide slots 302 are of a shape and extent to precisely define a leader block docking path into opening 301. The use of guide slots 302 enable the leader block 100 to be precisely positioned in opening 301 by the tape rewind operation. A similar set of guide slots may be optionally provided in the takeup reel to perform a similar leader block guide function and to precisely regulate the positioning of first end 115 of leader block 100 with respect to the tape winding surface of the takeup reel.

Second end 144 of cover 102 is recessed approximately the thickness of magnetic tape 103 from first side 115 of body 101. When the leader block 101 is inserted into the takeup reel of the tape drive, the first side 115 (which may be curved in shape) of leader block 100 forms a part of the outer circumference of the takeup reel and thus first side 115 is part of the magnetic tape winding surface. Docking pins 126, 127 precisely determine the location of first side 115 in the takeup reel by mating with corresponding notches in the takeup reel. The magnetic tape 103 is wrapped first over second end 144 of cover 102 and thence around the takeup reel. When one complete wrap of tape is taken, first side 115 and second end 144 of cover 102 (with one thickness of magnetic tape 103 wrapped over second end 144) form a smooth surface to prevent subsequent wraps of magnetic tape 103 on the takeup reel from having impressions thereon caused by the leader block protruding from the takeup reel.

Leader Block Latch Mechanism

A feature 117 is provided in back 114 of leader block 100 to accept a leader block latch mechanism. Feature 117 can be a rectangular semi-cylindrical or V-shaped notch extending from top 111 to bottom 112 of back 114 of body 101. Figures 4 and 5 illustrate a preferred leader block latch mechanism that can be incorporated in magnetic tape cartridge 300 to lock leader block 100 into magnetic tape cartridge 300. The leader block latch mechanism 402 consists of a latch arm 403 that is pivotally connected at one end 405 to the housing 417 of the magnetic tape cartridge 300 by an appropriate pivot mechanism 406a, 406b, 411. The pivot mechanism 406a, 406b, 411 includes a socket consisting of pivot pin cradle 406b and a support 406a to securely affix this mechanism to the magnetic tape cartridge housing 417 as well as precisely position it therein. A pivot pin 411 is included in the one end 405 of latch arm 403 and rests in the socket with one end being placed in pivot pin cradle 406b and a second end placed into an opening in support 406a. This pivot arrangement enables latch arm 403 to rotate in direction R as shown in Figure 5.

Attached to latch arm 403 is a spring 413 that interconnects the latch arm 403 of the latch mechanism 402 to a stop 418 attached to the housing 417. Spring 413 is shown as a flexible member attached to latch arm 403 in a "living hinge" configuration to place the latch arm 402 in a first position (Figure 4) as a result of the application of a force to the latch arm 403 by the spring 413. This first position is the leader block locked position illustrated in Figure 4. In this position, the latch arm 403 is located to prevent the withdrawal of the leader block 100 from the

magnetic tape cartridge housing 417. This is accomplished by the use of a projection 407 at the end of the latch arm 403 that engages a corresponding feature 117 on the leader block 100. If the user or a tape drive were to attempt to withdraw the leader block 100 from the magnetic tape cartridge 300, the forward motion (direction A) of the leader block 100 would be arrested by the latch arm 403 encountering the leader block notch groove, thereby preventing any motion of the leader block 100 in direction A. Therefore, the leader block 100 is captured between the latch arm 103 and the docking stop wherein the leader block feature 117 prevents the leader block 100 from moving in either of its normal operational directions (+A, -A). Spring 413 maintains latch arm 403 in this locked position absent the application of any exterior force in order to always provide a leader block lock function to safeguard the integrity of the magnetic tape 103 contained within the magnetic tape cartridge 300.

Release of Leader Block Latch Mechanism

The latch mechanism 402 is shifted to its second position, illustrated in Figure 5, by the application of an external force to latch arm 403 to overcome the force applied thereon by the spring 413. This force is generally applied thereon by the spring 413. This force is generally applied to latch arm 403 through the insertion of a leader block latch release pin 412 through an aperture 414 in the bottom of the magnetic tape cartridge housing 417 to rotate the latch arm 403 in a vertical direction (R) about pivot pin 411, such that the end 404 of the latch arm 403 clears the leader block feature 117 on the leader block 100 to enable a user or a tape drive to extract the leader

block 100 from within the magnetic tape cartridge housing 417.

This latch release pin 412 is typically part of the tape drive mechanism and is positioned adjacent to the drive hub on which the magnetic tape cartridge 300 is placed by the tape drive mechanism. Therefore, as the magnetic tape cartridge 300 is loaded onto the drive hub by the user or by an appropriate elevator mechanism contained within the tape drive, as is well known in the art, the latch release pin 412 contained in this tape drive mechanism enters aperture 414 in the bottom of the magnetic tape cartridge housing 417 and encounters latch arm 403 which is locking the leader block 100 in its locked position. As the magnetic tape cartridge 300 is lowered further on the drive hub, this latch release pin 412 forces the latch arm 403 to rotate about pivot pin 411 in a vertical direction a sufficient distance to enable the projection 407 on the end 104 of the latch arm 403 to clear the leader block feature 117 contained on the leader block 100 thereby freeing the leader block 100 to be withdrawn from the magnetic tape cartridge housing 417.

Guide slots 302 are illustrated in additional detail in Figures 6 and 7, which provide a top view and an exploded view, respectively, of the magnetic tape cartridge 300. Guide slots 302 are open at a first end 601 thereof facing opening 301 to capture docking pins 605, 606 when leader block 600 is drawn into opening 301 as the magnetic tape 103 is rewound on the reel located within housing 300. The shape of guide slots 302 is curved to direct first side 608 of leader block 600 around aperture 414 through which leader block latch release pin 412 enters magnetic tape cartridge 300. The second end 602 of guide slots 302 is closed to provide a

mechanical stop to terminate the movement of leader block 600 into opening 301. Figures 6 and 7 illustrate an alternative configuration of docking pins 605, 606 wherein instead of being cylindrical as in Figures 1 - 5, they are shown as semi-cylindrical in shape. The flat side of the semi-cylindrical pins 605, 606 is desirable to facilitate accurate positioning of the leader block 600 within a takeup reel, thereby ensuring that the first end 608 is precisely aligned with the circumference of the takeup reel. Also shown in Figures 6 and 7 is a longitudinally extending rib 607 which further facilities positioning leader block 600 both within magnetic tape cartridge opening 301 and in the takeup reel. The selection of a rounded shape for docking pins 605, 606 is to enable docking pins 605, 606 to automatically and smoothly compensate for any misalignment of leader block 100 with opening 301. If the centerlines of docking pins 605, 606 do not align with the centerlines of the first end 601 of guide slots 302, the curved shape of docking pins 605, 606 causes the first end 115 of leader block 100 to move laterally as docking pins 605, 606 encounter the first end 601 of guide slots 302 until precise alignment is attained. First end 601 of guide slots 302 may also be tapered in shape to funnel docking pins 605, 606 into guide slots 302. The use of guide slots 302 on both the top 604 and bottom 603 plates of cartridge housing 300 precisely align leader block 600 in x, y and z dimensions to prevent racking or tilting of leader block 600 in opening 301.

Summary

As can be seen from the assembled structure of Figure 2, magnetic tape 103 exits leader block 100

via first side 115 at a point substantially in the middle (centerline) of first side 115. Leader block 100 exerts a linear force on magnetic tape 103 in a direction that is coplanar with the surface of magnetic tape 103 thereby avoiding any tangential or acute angle components of this force which have a tendency to cause magnetic tape 103 to tear. The simple snap fit architecture of leader block 100 enables a craftsperson to quickly assembly leader block 100 and interconnect it to the magnetic tape 103 without the use of fasteners or special tools while precisely aligning magnetic tape 103 with leader block 100. The leader block includes a pair of docking pins 126, 127, one on the top 111 and one on the bottom 112 of the leader block 100, which docking pins 126, 127 encounter channels 302 in the opening 301 of the cartridge 300 to precisely guide the leader block 100 into the opening 301. The channels 302 also provide a mechanical stop to the movement of the leader block 100 into the opening 301.

While a specific embodiment of this invention has been disclosed, it is expected that those skilled in the art can and will design alternate embodiments of this invention that fall within the scope of the appended claims.

WE CLAIM:

1. A magnetic tape cartridge comprising:

a substantially rectangular housing (300), having an opening (301) in one corner thereof, for enclosing a single reel of magnetic tape (103);

a leader block (100) for said magnetic tape (103), wherein said leader block (100) has a top (111), and a bottom (112), and includes an aperture in a first side (115) for receiving a first end of said magnetic tape (103), and first (126) and second (127) docking pin means located on said top (111) and bottom (112), respectively, of said leader block (100), proximate said first side (115) and adapted to guide said leader block (100) into said opening (301).

2. A magnetic tape cartridge, comprising:

a substantially rectangular housing (300) including a top plate (604) and a bottom plate (603), which housing (300) has an opening (301) in one corner thereof and is adapted to enclose a single reel of magnetic tape (103) rotatably mounted within said housing (300) and including a leader block (600) attached to one end of said magnetic tape (103); and

first and second leader block guide means (302) located on an interior surface of said top plate (604) and said bottom plate (603) of said housing (300), respectively, proximate said opening (301) and mating with corresponding features (605, 606) on said leader block (600) to guide said leader block (600) into said opening (301).

3. The magnetic tape cartridge of claim 2 wherein said first leader block guide means (302) comprises:

a slot (302) inscribed in said interior surface of said top (604) plate of said housing (300) and having a first end (601) open to said opening (301) in said housing (300) to receive a corresponding projection (605) on said leader block (600).

4. The magnetic tape cartridge of claim 3 wherein said slot (302) has a second end (602) closed to stop the movement of said leader block (600) into said housing (300) by engaging said projection (605) on said leader block (600).

5. The magnetic tape cartridge of claim 2 wherein said second leader block guide means (302) comprises:

a slot (302) inscribed in said interior surface of said bottom plate (603) of said housing (300), having a first end (601) open to said opening (301) in said housing (300) to receive a corresponding projection (606) on said leader block (600) and shaped to guide said leader block (600) into said opening (301).

6. The magnetic tape cartridge of claim 5 wherein said slot (302) has a second end (602) closed to stop the movement of said leader block (600) into said housing (300) by engaging said projection (606) on said leader block (600).

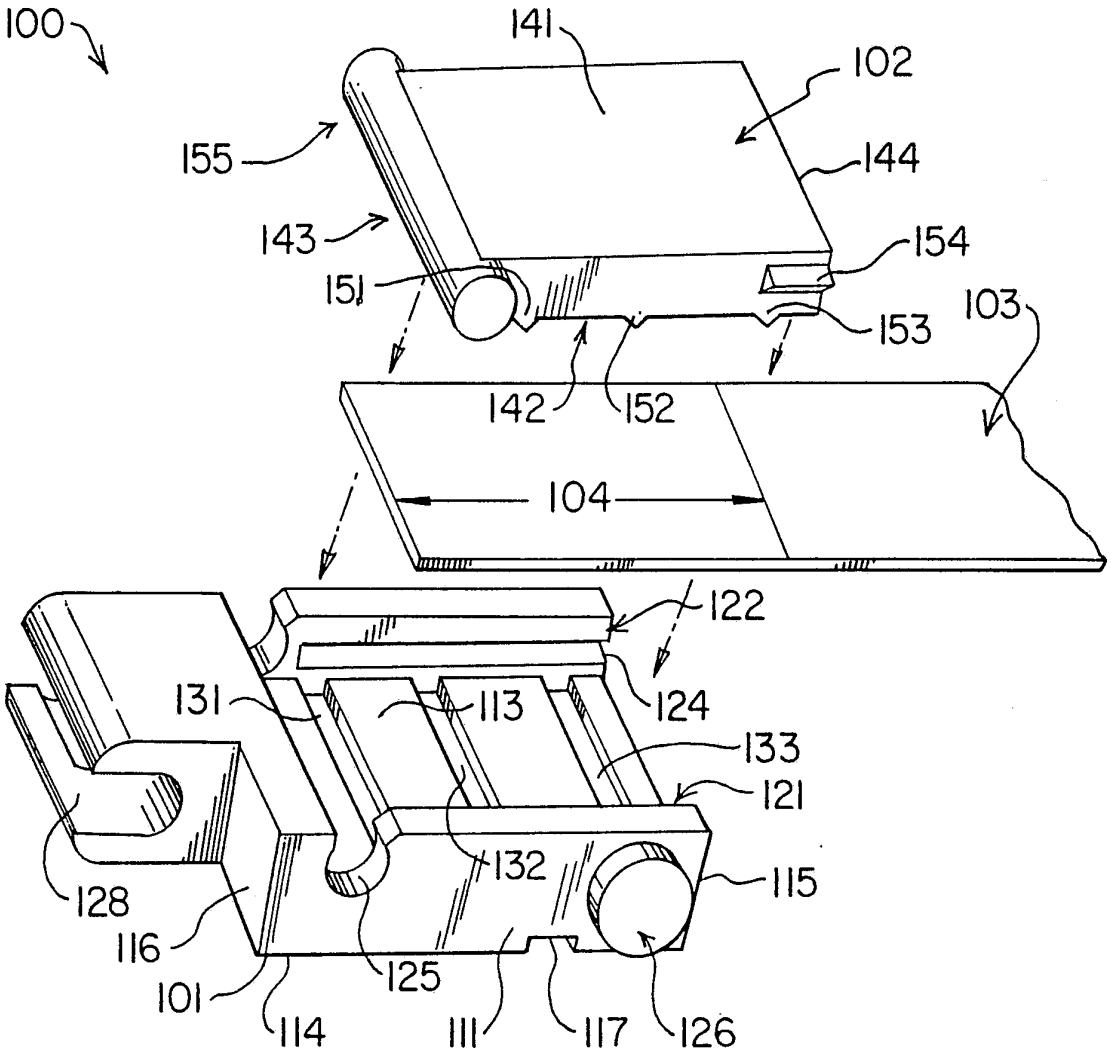
100
141
102
155
144
143
154
151
153
103
142
152
104
122
131
113
124
133
121
132
115
128
116
125
101
114
111
117
126

FIG. 1.

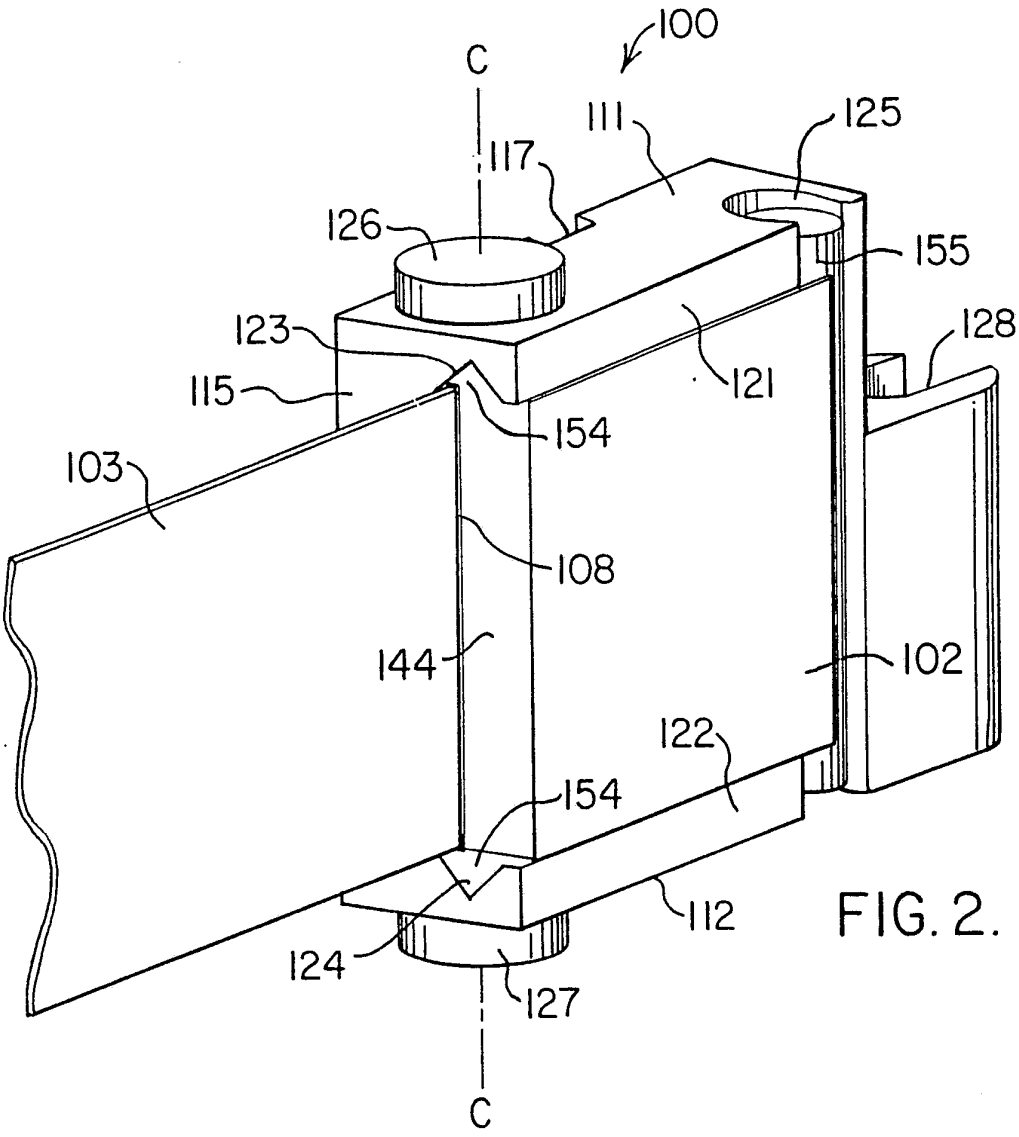
100
C
111
125
117
126
155
123
128
115
121
154
103
108
144
102
122
154
112
124
127
C

FIG. 2.

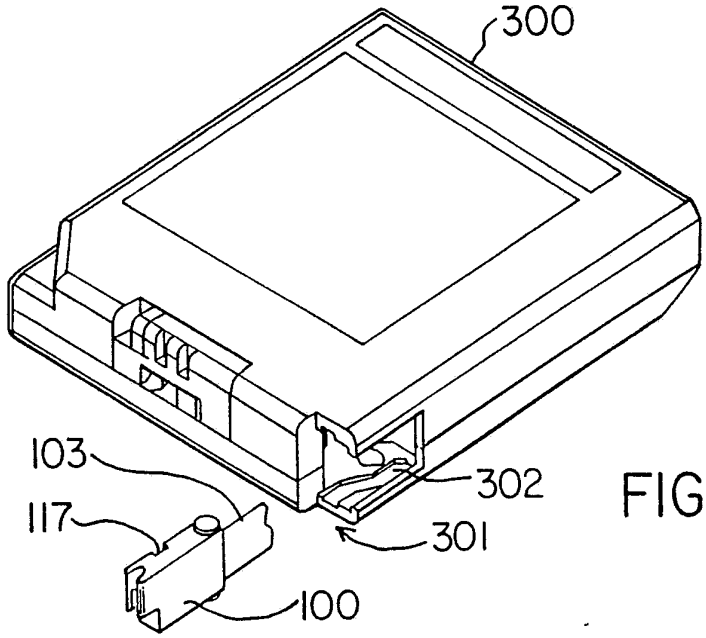
300
103
302
117
301
100

FIG. 3.

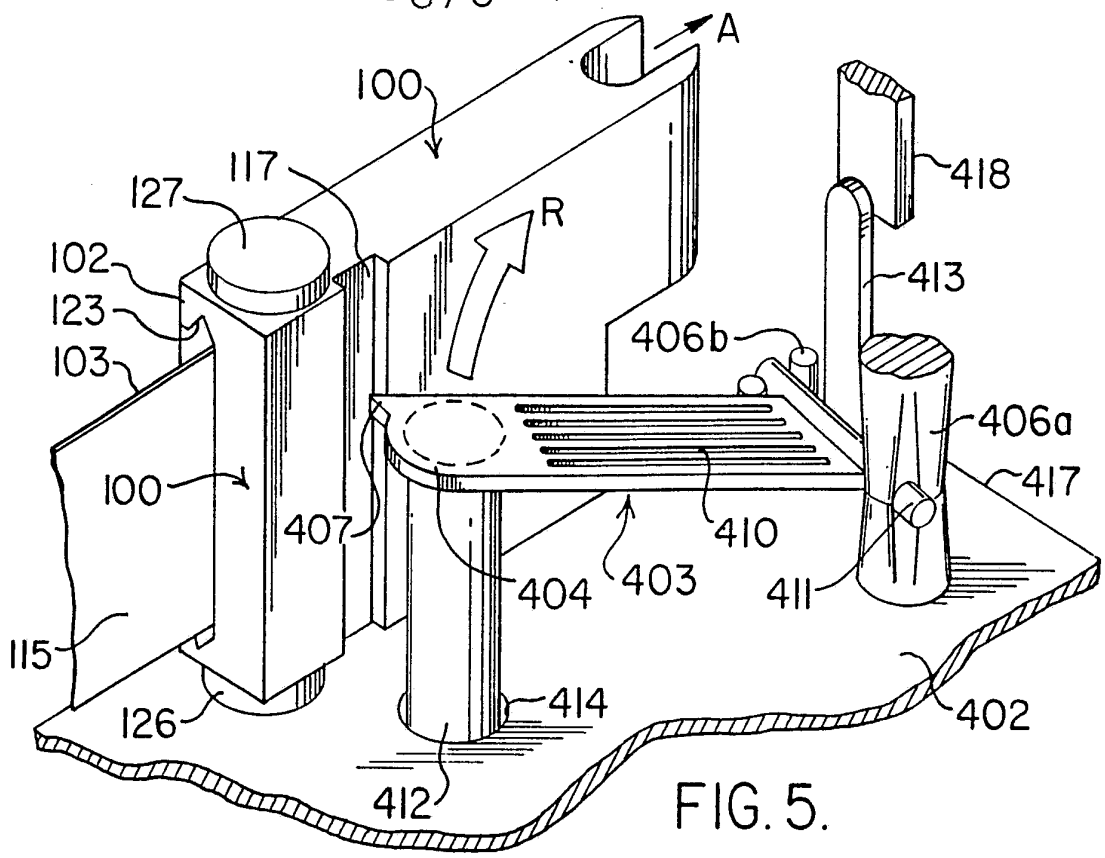
A
100
117
127
R
418
102
413
123
406b
103
406a
100
417
407
410
404
403
411
115
414
402
126
412

FIG. 5.

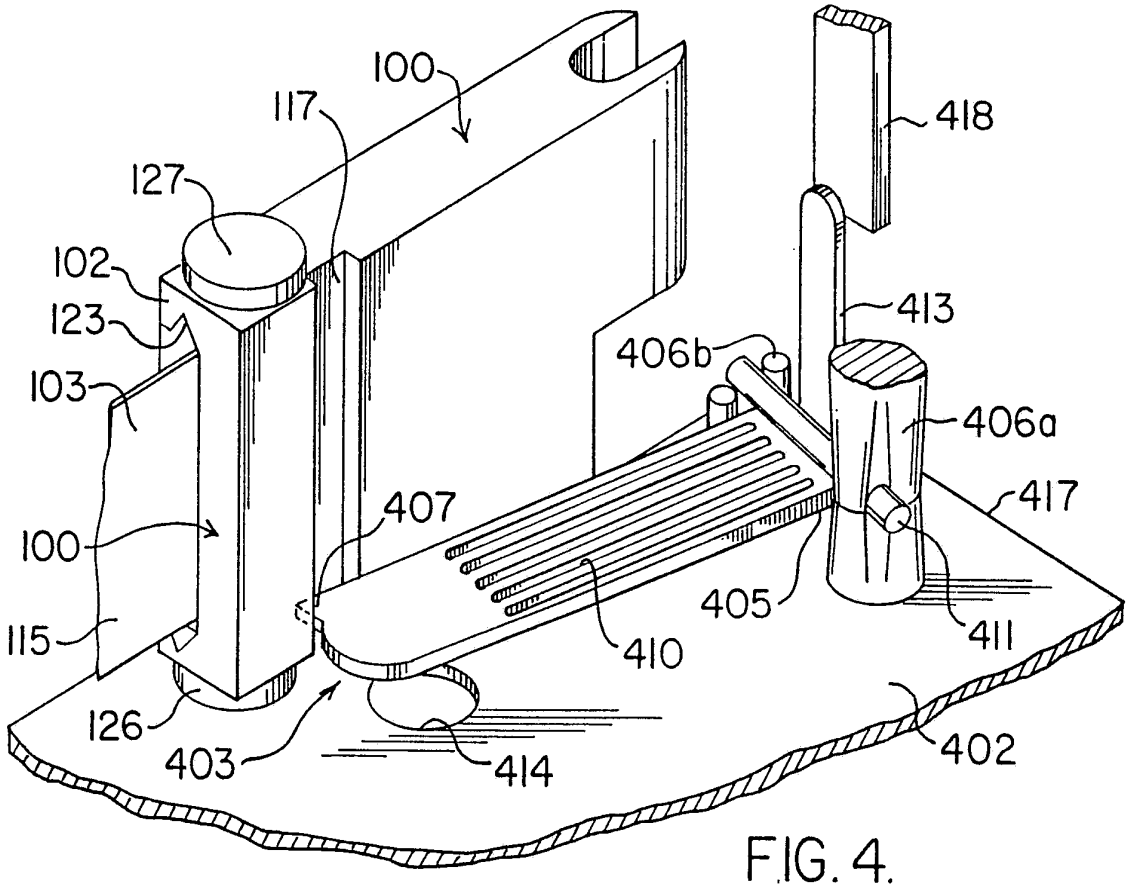
100
117
418
127
102
413
123
406b
103
406a
417
407
100
405
410
411
115
126
403
414
402

FIG. 4.

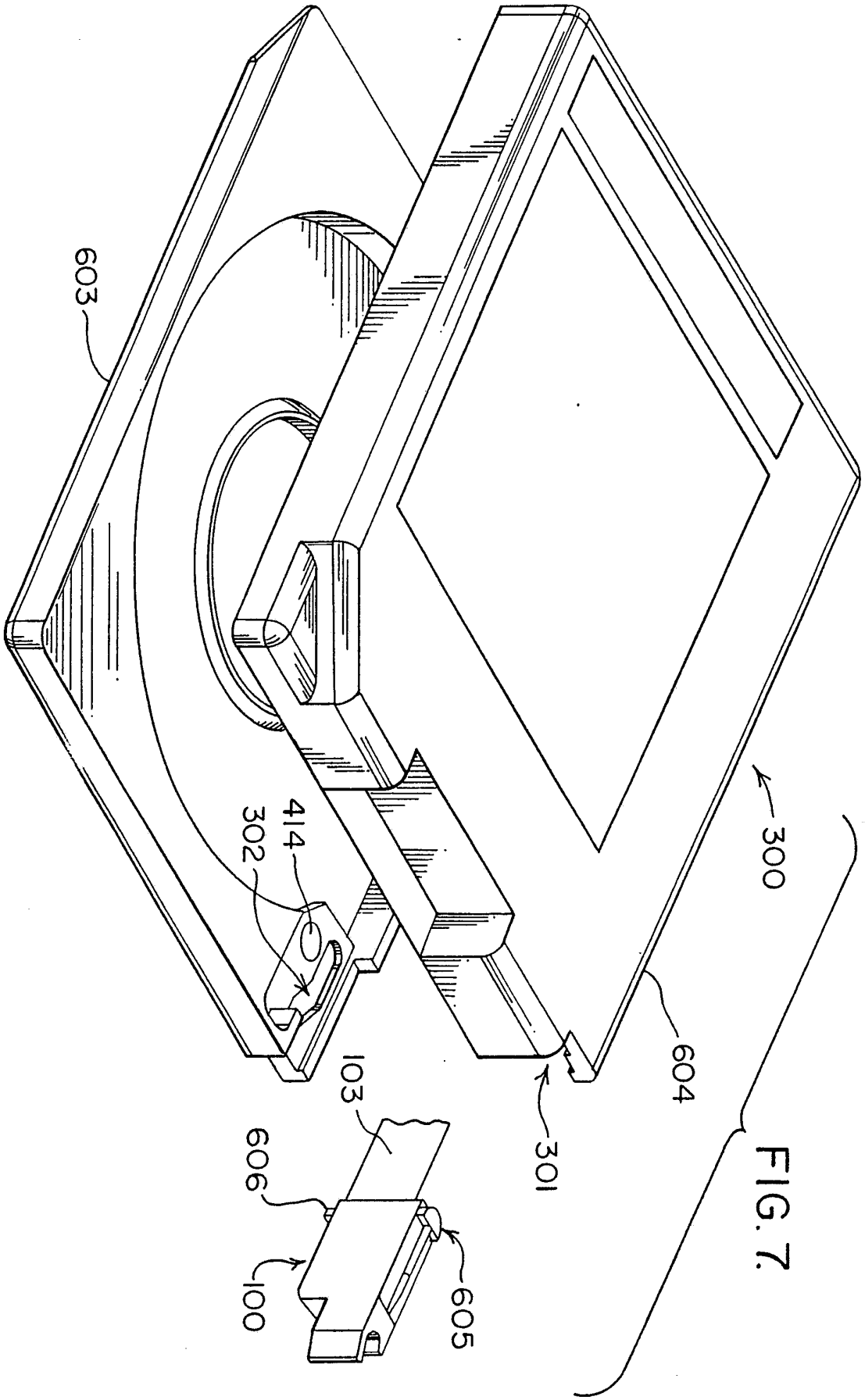

FIG. 7.

FIG. 6.

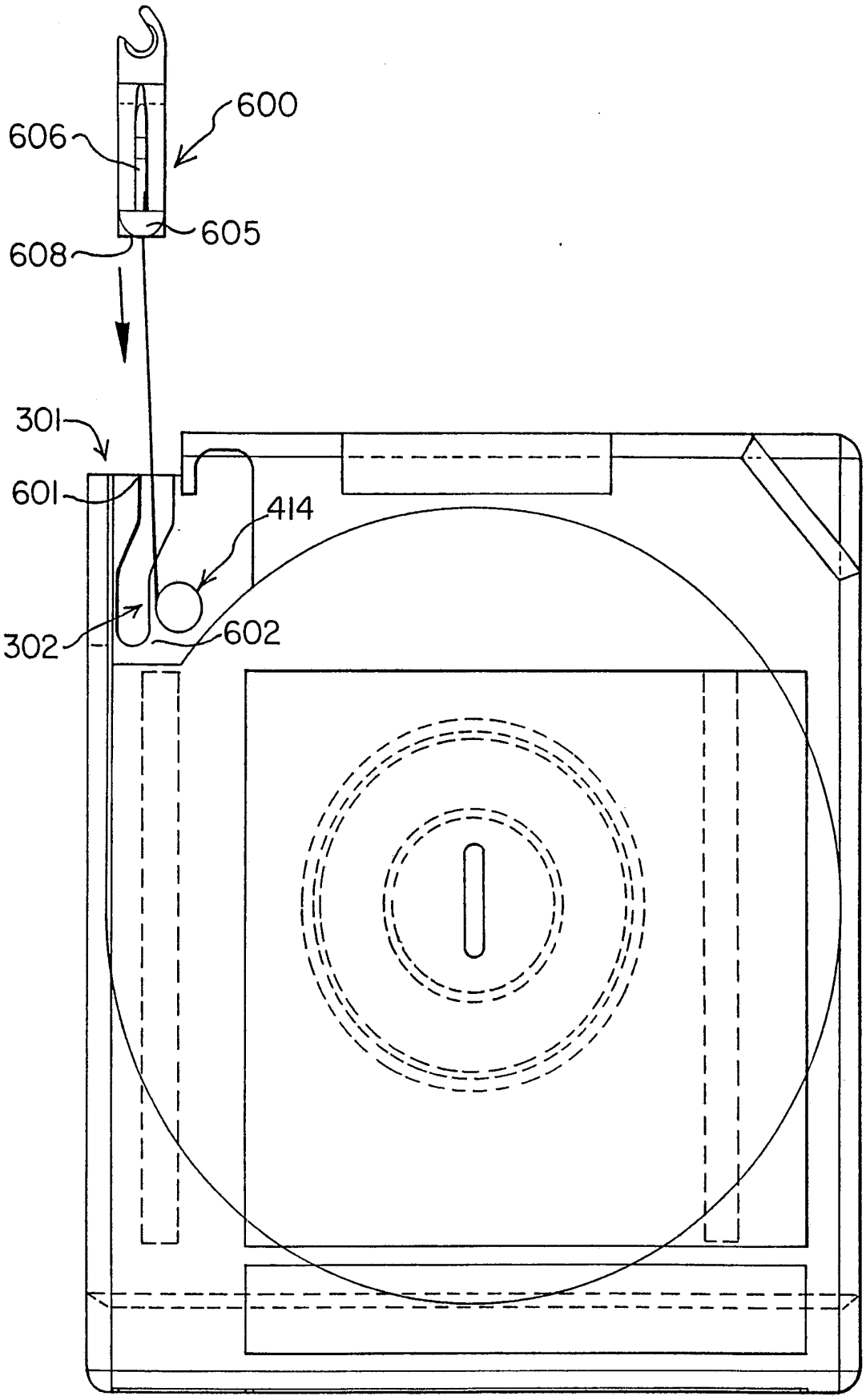

INTERNATIONAL SEARCH REPORT

International Application No PCT/US 93/02690

I. CLASSIFICATION OF SUBJECT MATTER (if several classification symbols apply, indicate all)[6]

According to International Patent Classification (IPC) or to both National Classification and IPC

Int.Cl. 5 G11B23/20; G11B23/26

II. FIELDS SEARCHED

Minimum Documentation Searched[7]

Classification System	Classification Symbols
Int.Cl. 5	G11B

Documentation Searched other than Minimum Documentation to the Extent that such Documents are Included in the Fields Searched[8]

III. DOCUMENTS CONSIDERED TO BE RELEVANT[9]

Category °	Citation of Document,[11] with indication, where appropriate, of the relevant passages[12]	Relevant to Claim No.[13]
A	US,A,3 934 840 (KATSU INAGA) 27 January 1976 see claims 1-4; figures 3-5	1
A	EP,A,0 143 592 (ELECTRONIC PROCESSORS) 5 June 1985 see the whole document	2-6
A	EP,A,0 409 534 (MINNESOTA MINING) 23 January 1991 see abstract; figures 7,8	1-6
A	DE,C,1 169 709 (N.V.PHILIPS) 6 May 1964 see the whole document	2-6
A	EP,A,0 286 729 (SHAPE INC) 19 October 1988 see abstract; claims; figures 1-3	2-6

° Special categories of cited documents :[10]

"A" document defining the general state of the art which is not considered to be of particular relevance

"E" earlier document but published on or after the international filing date

"L" document which may throw doubts on priority claim(s) or which is cited to establish the publication date of another citation or other special reason (as specified)

"O" document referring to an oral disclosure, use, exhibition or other means

"P" document published prior to the international filing date but later than the priority date claimed

"T" later document published after the international filing date or priority date and not in conflict with the application but cited to understand the principle or theory underlying the invention

"X" document of particular relevance; the claimed invention cannot be considered novel or cannot be considered to involve an inventive step

"Y" document of particular relevance; the claimed invention cannot be considered to involve an inventive step when the document is combined with one or more other such documents, such combination being obvious to a person skilled in the art.

"&" document member of the same patent family

IV. CERTIFICATION

Date of the Actual Completion of the International Search	Date of Mailing of this International Search Report
12 JULY 1993	22. 07. 93
International Searching Authority	**Signature of Authorized Officer**
EUROPEAN PATENT OFFICE	DURAND F.C.

ANNEX TO THE INTERNATIONAL SEARCH REPORT ON INTERNATIONAL PATENT APPLICATION NO.

US 9302690
SA 72722

This annex lists the patent family members relating to the patent documents cited in the above-mentioned international search report. The members are as contained in the European Patent Office EDP file on 12/07/93
The European Patent Office is in no way liable for these particulars which are merely given for the purpose of information.

Patent document cited in search report	Publication date	Patent family member(s)	Publication date
US-A-3934840	27-01-76	CA-A- 1023717	03-01-78
		DE-A- 2427218	02-01-75
		FR-A,B 2232802	03-01-75
		GB-A- 1474736	25-05-77
		NL-A- 7407575	09-12-74
EP-A-0143592	05-06-85	US-A- 4555077	26-11-85
		JP-A- 60191491	28-09-85
EP-A-0409534	23-01-91	US-A- 5031065	09-07-91
		AU-B- 618676	02-01-92
		AU-A- 5581890	17-01-91
		CA-A- 2016327	17-01-91
		US-A- 5165083	17-11-92
DE-C-1169709		BE-A- 624949	
		FR-A- 1340424	
		NL-A- 285458	
EP-A-0286729	19-10-88	US-A- 4775115	04-10-88
		DE-A- 3777165	09-04-92
		JP-A- 63316387	23-12-88