June 10, 1941. F. ULRICH 2,244,743

LOCKING SLIDER FOR SLIDE FASTENERS

Filed Jan. 23, 1940

Fig. 1

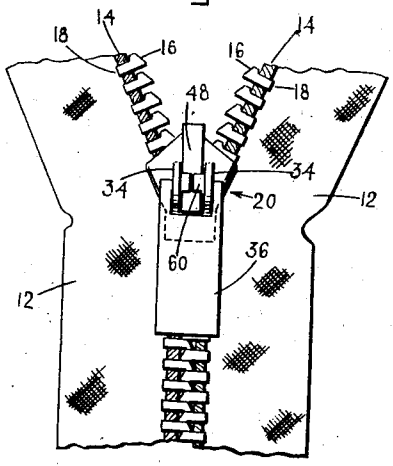

Fig. 4

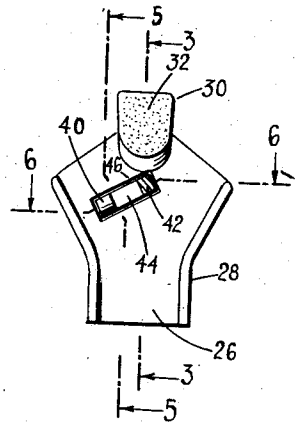

Fig. 2

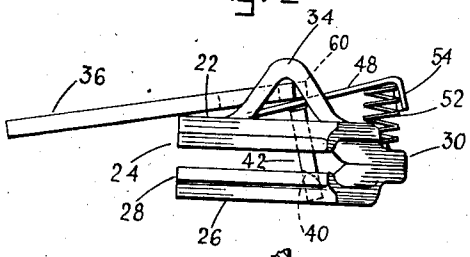

Fig. 5

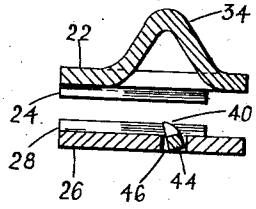

Fig. 3

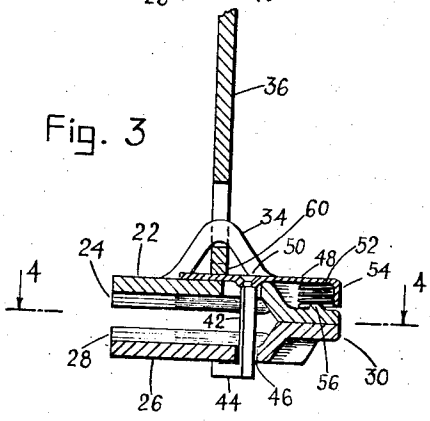

Fig. 6

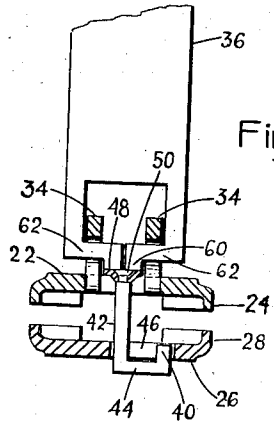

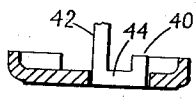

Fig. 7

INVENTOR
FREDERICK ULRICH
BY
James a Franklin
ATTORNEY

Patented June 10, 1941 2,244,743

UNITED STATES PATENT OFFICE

2,244,743

LOCKING SLIDER FOR SLIDE FASTENERS

Frederick Ulrich, Bayonne, N. J., assignor to Conmar Products Corporation, Bayonne, N. J., a corporation of New Jersey

Application January 23, 1940, Serial No. 315,146

10 Claims. (Cl. 24—205)

This invention relates to slide fasteners, and more particularly to a locking slider for the same.

The primary object of my invention is to generally improve locking sliders, and more particularly locking sliders of the so-called "automatic" type. A more particular object is to provide such a locking slider in which the locking tooth is located at the jaws of the elements where they are secured to the tape and are incapable of movement. Still another object is to provide a locking slider in which the force applied to the locking tooth is taken up in a slot formed directly in the slider wall and is either not transferred, or transferred to only a negligible extent to the operating mechanism of the slider.

Still another object of my invention is to provide an automatic locking slider adapted for use on a slider body having an indented or welded neck portion. Still another object is to provide a locking tooth which is released by positive cam action when the finger piece or "pull" of the slider is raised. This is better than relying upon an assumed outward pull on the finger piece, because in many cases the operator may attempt to move the slider without pulling the finger piece outwardly.

To the accomplishment of the foregoing, and such other objects as may hereinafter appear, my invention consists in the locking slider elements and their relation one to the other, as hereinafter are more particularly described in the specification and sought to be defined in the claims. The specification is accompanied by a drawing, in which:

Fig. 1 is a front elevation of a part of a slide fastener embodying features of my invention;

Fig. 2 is a side elevation of the slider, removed from the fastener;

Fig. 3 is a longitudinal section taken in elevation through the slider;

Fig. 4 is a horizontal section taken in the plane of the line 4—4 of Fig. 3;

Fig. 5 is a vertical section taken in the plane of the line 5—5 of Fig. 4;

Fig. 6 is a transverse section taken in the plane of the line 6—6 of Fig. 4; and

Fig. 7 is a fragmentary section similar to Fig. 6, but showing the tooth in locking position.

Referring to the drawing, and more particularly to Fig. 1, the slide fastener comprises tapes 12 having beaded or corded edges 14 on which are mounted a plurality of fastener elements 16. These are of conventional type and comprise heads having interlocking means, such as projections on the upper side and recesses on the lower side, and also having outwardly extending jaws 18 which are clamped on the beaded edges 14. The tapes 12 may also be provided with appropriate top and bottom stops which are not shown in the drawing.

The interlocking elements 16 are engaged or disengaged by a suitable slider generally designated 20. Referring now to the remaining figures of the drawing, the slider 20 comprises an upper wall 22 which is downwardly flanged at 24, and a lower wall 26 which is upwardly flanged at 28. The upper and lower walls are secured together in spaced relation by means of a neck portion 30. In the present case, the neck portion 30 is formed by indenting the upper wall downwardly and the lower wall upwardly, thereby forming inwardly displaced surfaces which may be secured together by appropriate means, as by electrically welding the same together. The welded surfaces are indicated at 32 in Fig. 4. The upper and lower walls may, if desired, be made of one piece of metal.

A pair of straps or bails 34 are provided on the upper wall of the slider to pivotally receive a finger piece or pull 36 of any desired shape. The bails 34 are preferably formed integrally with the upper wall, as by incising the material of the wall and displacing a part of the metal upwardly. This is best shown in Fig. 5.

The locking action is obtained by means of a locking tooth 40 which projects upwardly through the bottom wall 26 of the slider. The tooth is controlled by a link 42 which passes through both walls of the slider near the neck portion 30. The tooth 40 is offset sidewardly from the link 42, so that it will engage the interlocking elements at the jaw where they are secured to the tapes, rather than at the heads of the elements. The tooth 40 and link 42 are connected by a cross arm 44. All of these parts are receivable in a slot 46 cut through the bottom wall 26 of the slider.

The upper end of link 42 is connected to a strip of metal 48 which is disposed on the upper side of the slider between the bails 34. This strip of metal acts as a lever, and the link 42 may be secured thereto by riveting the same in place, as is shown at 50 (Figs. 3 and 6). The lower or inner end of lever 48 acts as a pivot or fulcrum, while the outer end is acted upon by a small coiled compression spring 52. The spring 52 is disposed between the neck 30 and lever 48, and may be held in position by bending the outer end of lever 48 downwardly around the spring, as is

shown at 54. If desired, a part of the metal at neck 30 may be formed upwardly, as is shown at 56 (Fig. 3), to additionally hold the spring in place at its lower end.

Lever 48 is arranged to be acted upon by means of a cam 60, which in turn is moved by pull 36. In the present case the cam 60 is formed integrally with pull 36. To facilitate attachment of the pull on the slider, the cam is preferably slit transversely at the center so that the ends of the pull may be spread apart enough to pass one end through one of the bails 34, and then the other end through the other bail, whereupon the sides of the pull may be pressed together to bring the two halves of the cam in end to end relation, as is shown in the drawing. The cams 60 are extensions of the pivot portions 62 (Fig. 6) of the pull. The pivot portions 62 are received in bails 34, while the cam portions 60 are disposed between the bails 34 and directly above the lever 48.

It will be evident from examination of the drawing that when the pull 36 is in the horizontal position or idle position shown in Fig. 2, the cam 60 moves upwardly out of the way of lever 48, thus permitting spring 52 to expand. The resulting upward movement of lever 48 raises link 42 and with it the arm 44 and locking tooth 40. These move to the elevated position shown in Fig. 7, the tooth 40 entering between adjacent interlocking elements and so holding the slider against downward or opening movement. If desired, the parts may be arranged to assume a sloping position, as is shown in Figs. 2 and 5, thus helping the locking action of tooth 40. It will also be observed that any locking force applied on tooth 40 by attempted opening of the slider is absorbed directly in slot 46, the latter receiving the tooth and the cross arm 44, as is shown in Figs. 5 and 7.

When the slide fastener is to be opened, the pull 36 is raised and this causes the cam 60 to depress the lever 48, as is best shown in Figs. 3 and 6. The downward movement of lever 48 shifts the link 42 downwardly, and also moves the tooth 40 below the top surface of the lower wall 26 of the slider. The tooth is thus moved out of the way of the interlocking elements, and the slider may be freely moved along the tapes or stringers of the slide fastener.

It is believed that the construction and operation, as well as the advantages of my improved locking slider, will be apparent from the foregoing detailed description thereof. It will also be apparent that while I have shown and described my invention in a preferred form, changes and modifications may be made in the structure disclosed without departing from the spirit of the invention, as sought to be defined in the following claims.

I claim:

1. A locking slider for a slide fastener, said slider comprising top and bottom walls connected at a neck, and means to lock said slider, said means including a link extending through both walls of the slider at the neck, a locking tooth offset sidewardly from said link, a cross arm extending between said link and said locking tooth, said tooth, cross arm and link all being receivable in a slot in the slider, a pull mounted on the outside of the slider, and means so connecting said pull to said link that the tooth is moved to unlocked position when the pull is raised to operate the slider.

2. A locking slider for a slide fastener having tapes with interlockable fastener elements secured along the edges of the tapes, said slider comprising flanged top and bottom walls connected at a neck, and means to lock said slider, said means including a link extending through both walls of the slider at the neck, a locking tooth offset sidewardly from said link, a cross arm extending between said link and said locking tooth, said tooth, cross arm and link all being formed out of a single piece of metal and being receivable in a slot in the slider wall, whereby the slot takes the locking force applied to the tooth, a pull pivotally mounted on the top wall of the slider, and means so connecting said pull to said link that the tooth is moved to unlocked position when the pull is raised to operate the slider.

3. A locking slider for a slide fastener, said slider comprising top and bottom walls connected at a neck, and means to lock said slider, said means including a link extending through both walls of the slider at the neck, a locking tooth connected to but offset from said link at the bottom wall, resilient means tending to raise said tooth to locking position, a pull pivotally mounted at the top wall of the slider, and means including a cam on the pull so connecting said pull to said link that the pull moves the link and tooth downward to unlocked position when the pull is turned to a position transverse of the slider.

4. A locking slider for a slide fastener, said slider comprising top and bottom walls connected at a neck, and means to lock said slider, said means including a link extending through both walls of the slider at the neck, a locking tooth offset sidewardly from said link at the bottom wall, a cross arm extending between said link and said locking tooth, said tooth, cross arm and link being receivable in a slot in the bottom wall, whereby the slot takes the locking force applied to the tooth, a pull pivotally mounted at the top wall of the slider, and means so connecting said pull to said link that the tooth is moved downward to unlocked position when the pull is raised to operate the slider.

5. A locking slider for a slide fastener having tapes with interlockable fastener elements secured along the edges of the tapes, said slider comprising flanged top and bottom walls connected at a neck, and means to lock said slider, said means including a link extending through both walls of the slider at the neck, a locking tooth offset sidewardly from said link at the bottom wall, a cross arm extending between said link and said locking tooth, said tooth, cross arm and link all being formed out of a single piece of metal and being receivable in a slot in the bottom wall, whereby the slot takes the locking force applied to the tooth, a pull pivotally mounted at the top wall of the slider, means so connecting said pull to said link that the tooth is moved downward to unlocked position when the pull is raised to operate the slider, and resilient means normally tending to restore the locking tooth to locking position.

6. A locking slider for a slide fastener, said slider comprising flanged top and bottom walls connected by a neck portion, a pull pivotally mounted on said top wall, a cam on said pull, a link extending through said slider at the neck, a locking tooth offset from but connected to said link at the bottom of the slider, the cam positively pushing the link and tooth downwardly when the pull is turned upwardly preparatory to moving the slider.

7. A locking slider for a slide fastener having

tapes with interlockable fastener elements secured along the edges of said tapes, said slider comprising flanged top and bottom walls connected by a neck portion, bails on said top wall pivotally carrying a pull, a lever disposed between said bails beneath said pull, a compression spring disposed between the end of said lever and the neck of said slider and normally urging said lever upward, a cam on said pull between the bails for depressing said lever when the pull is turned upwardly for manipulation of the slider, a link extending downwardly from said lever through said slider, and a locking tooth on said link.

8. A locking slider for a slide fastener, said slider comprising flanged top and bottom walls connected by a neck portion, bails on said top wall pivotally carrying a pull, a lever disposed between said bails beneath said pull, a cam on said pull between the bails for depressing said lever when the pull is turned upwardly, a link extending downwardly from said lever through said slider at the neck, a locking tooth offset from said link, and a cross arm extending laterally from said link to said locking tooth.

9. A locking slider for a slide fastener having tapes with interlockable fastener elements secured along the edges of said tapes, said slider comprising flanged top and bottom walls connected by a neck portion, bails on said top wall pivotally carrying a pull, a lever disposed between said bails beneath said pull, a compression spring between the end of said lever and the neck of said slider normally urging said lever upward, a cam on said pull between the bails for depressing said lever when the pull is turned upwardly, a link extending downwardly from said lever through said slider at the neck, a locking tooth sidewardly offset from said link for movement upwardly between elements at the tape, and a cross arm extending laterally from said link to said locking tooth, the bottom wall of said slider being slotted to receive the locking tooth, the link and the cross arm.

10. A locking slider for a slide fastener having tapes with interlockable fastener elements secured along the edges of said tapes, said slider comprising flanged top and bottom walls connected by a neck portion, bails on said top wall pivotally carrying a pull, a lever disposed between said bails beneath said pull, a compression spring between the end of said lever and the neck of said slider normally urging said lever upward, a cam on said pull between the bails for depressing said lever when the pull is turned upwardly, a link extending downwardly from said lever through said slider at the neck, a locking tooth sidewardly offset from said link for movement upwardly between elements at the tape, and a cross arm formed integrally with and extending laterally from said link to said locking tooth, the bottom wall of said slider being slotted to receive the locking tooth, the link and the cross arm, said cross arm being received within said slot to take the locking load when said tooth is in locking position.

FREDERICK ULRICH.