(19) Europäisches Patentamt
European Patent Office
Office européen des brevets

(11) EP 0 628 669 B1

(12) **EUROPEAN PATENT SPECIFICATION**

(45) Date of publication and mention of the grant of the patent:
22.03.2000 Bulletin 2000/12

(51) Int. Cl.[7]: **E04B 1/41**

(21) Application number: **94303604.6**

(22) Date of filing: **20.05.1994**

(54) **Wall tie**

Mauerwerksanker

Ancrage pour maçonnerie

(84) Designated Contracting States:
DE FR GB

(30) Priority: **20.05.1993 GB 9310377**

(43) Date of publication of application:
14.12.1994 Bulletin 1994/50

(73) Proprietor: **METSEC PLC**
Oldbury, Warley B69 4HE (GB)

(72) Inventor: **Burns, Roy John**
Rugeley, Staffordshire, WS15 4RS (GB)

(74) Representative:
Carpenter, David et al
MARKS & CLERK,
Alpha Tower,
Suffolk Street Queensway
Birmingham B1 1TT (GB)

(56) References cited:
GB-A- 2 010 354
GB-A- 2 210 395
GB-A- 2 260 348

Note: Within nine months from the publication of the mention of the grant of the European patent, any person may give notice to the European Patent Office of opposition to the European patent granted. Notice of opposition shall be filed in a written reasoned statement. It shall not be deemed to have been filed until the opposition fee has been paid. (Art. 99(1) European Patent Convention).

EP 0 628 669 B1

Printed by Xerox (UK) Business Services
2.16.7/3.6

Description

[0001] This invention relates to a wall tie for securing a brick or block built wall to a support structure, for example for securing one leaf of a cavity wall construction to the other leaf thereof (cf. GB-A-2 260 348).

[0002] Wall ties are generally arranged to be embedded in the mortar course positioned between the courses of bricks or other building blocks used in the construction of a cavity wall in order to secure the tie to the construction. One common problem with many known wall ties is that if they are subject to forces tending to withdraw the tie from between courses of the wall, the resistance to such a force is relatively low, and movement of the wall tie occurs, followed by fracture of the mortar course.

[0003] It is an object of the invention to provide a wall tie in which the above described problem is reduced.

[0004] In accordance with the present invention there is provided a wall tie comprising an elongate member having a central portion and first and second opposite end portions integral therewith, at least said first end portion being arranged to be embedded in a mortar course between brick or block courses of a wall or leaf of a wall, and, said wall tie being characterised in that said first end portion includes an elongate region of V-shaped cross-section the width and depth of which increases from a minimum at the end of the region adjacent said central portion.

[0005] The wall tie preferably comprises a shaped metal strip, preferably a stainless steel strip.

[0006] Preferably the region of V-shaped cross-section is part of a region of inverted W-shaped cross-section.

[0007] The wall tie may include a generally flat region between the central region and the first end region to facilitate manual bending allowing vertical adjustment of the wall tie.

[0008] The wall tie preferably further includes an upstanding wall extending generally perpendicularly to the length of the wall tie.

[0009] Preferably, the upstanding wall subtends an angle of 85 to 90° with the horizontal, in use.

[0010] Preferably, the upstanding wall defines part of the boundary of an aperture provided in the wall tie.

[0011] The invention will further be described by way of example with reference to the accompanying drawings, in which:

Figure 1 is a side view of a wall tie according to a first embodiment of the invention;

Figure 2 is a plan view of the wall tie of Figure 1;

Figure 3 is a side view of a wall tie according to a second embodiment;

Figure 4 is a plan view of the embodiment of Figure 3;

Figure 5 is side view of a wall tie according to a third embodiment; and

Figure 6 is a plan view of part of the wall tie of Figure 5.

[0012] The wall tie of Figures 1 and 2 is formed using progression tooling from an elongate strip 10 of stainless steel, although for some applications galvanised steel and mild steel may be suitable materials. The tie is approximately 200 mm in length and 20 mm in width at its widest point. The tie is intended for linking two parallel leaves of brick or block of a cavity wall and so the tie is symmetrical about its transverse centreline.

[0013] A region 12 of length approximately 25 mm at the centre of the wall tie is folded about the longitudinal centre line of the base strip so as to take an inverted V-section form the apex of which is rounded. At each end of the region 12 the apex of the fold is deformed downwardly to provide two apices 16, the strip assuming an inverted 'W' cross-section the depth and width of the central 'V' of which increases progressively towards the respective end of the tie. Thus the apices 16 of each half of the tie diverge from their common start point to maximum spacing adjacent the respective end of the tie. It will be recognised that the provision of longitudinal folds increases the rigidity of the wall tie.

[0014] The lower faces 17a of the 'V' 17 of each inverted 'W' region are thus inclined to both the vertical and the horizontal (assuming that the tie is positioned horizontally) as, correspondingly, are the upper faces 17b of the 'V' of each inverted 'W' region. It will be recognised therefore that any attempt to withdraw the embedded inverted 'W' region of the tie from between the courses of the wall would generate a two-fold wedging action at the upper and lower faces of the 'V' 17 tending firstly to drive the upper and lower courses of bricks or block apart against the weight of the wall above, and secondly to split the mortar course laterally displacing solid mortar in the plane of the mortar course against the resistance of the remainder of the mortar course.

[0015] Each end of the wall tie is provided with an elongate aperture 20 the outer end margin of which is bent to define an upstanding wall 22 which, in use, preferably extends at 85 to 90° to the horizontal, the upstanding wall 22 extending generally perpendicular to the length of the wall tie.

[0016] In use, during construction of a cavity wall, a first end of each wall tie is positioned in the mortar provided on top of a first course of bricks or other building blocks of a first leaf of the wall before a second course is provided thereon, the mortar extending through the elongate aperture 20. When the tie is correctly positioned, the apices 16 of each inverted 'W' region extend generally horizontally. The opposite end of each wall tie

extends into the mortar provided between courses of bricks or other building blocks of the other leaf in a similar manner.

[0017] In use, should the leaves tend to separate or move towards one another the wall ties provided between the leaves become subject to forces tending to move them relative to the leaves, within their mortar course and perpendicular to the wall. Such movement of a tie relative to the leaf in which it is embedded is resisted by the weight of the wall above the tie and the lateral integrity of the mortar course as described above. It is recognised that in the absence of the walls 22 there is a slight risk of a small slippage of the tie in the mortar course before the wedging action of the faces of the 'V' is fully effective. However the walls 22 keyed into the mortar course resist such slippage.

[0018] As shown in Figures 1 and 2, the wall tie further includes a second aperture 24 provided at each end thereof. The apertures 24 are provided for the purpose of positioning the wall tie during the progression tooling process. However, in use, mortar will extend through the apertures 24 and so they may further act to resist movement of the wall tie in the mortar course.

[0019] The centre region 12 of the wall tie is stamped to provide three parallel ribs 26 which, in use, act as drip points defining a water barrier to prevent water from crossing the cavity of the wall. Additionally the ribs 26 enhance the rigidity of the region 12.

[0020] The embodiment illustrated in Figures 3 and 4 includes one end similar to the ends of the wall tie described above in relation to Figures 1 and 2, and a second end including a pair of grooves 30 arranged to receive the inturned edges of a generally C-shaped elongate member 32 embedded in a vertical orientation in the face of a cast concrete pillar 34 or other support structure.

[0021] In use, the wall tie is attached to the C-shaped member 32 by inserting the second end of the wall tie into the groove thereof, and then rotating the wall tie by approximately 90°. The first end of the wall tie is then positioned in the mortar between courses of bricks or other building blocks during construction of that leaf of the wall, as described above.

[0022] In a modification the wedge shaping of the end region of the tie is received within a corresponding re-entrant wedge shaping of a metal channel and the grooves 30 are dispensed with.

[0023] The embodiment of Figures 5 and 6 includes end regions 40 of similar form the inverted 'W' regions described above but with the apertures 20 omitted and the function of the walls 22 performed by downturned end walls 48. In this arrangement the 'V' formation with the horizontally and vertically inclined faces assumes greater prominence than the inverted 'W' aspect, the inverted 'W'-section including narrow lips 44 which enhance the rigidity of the tie.

[0024] The or each 'W'-section region 40 is spaced from an inverted V-section central region 46 by a generally flat region 42 which facilitates bending, if desired, to adjust the wall tie so as to be suitable for use in situations in which the courses of bricks or other building blocks used in the leaves of the cavity wall do not align horizontally. Naturally this feature could be incorporated in the design of Figures 1 and 2 if desired.

[0025] If desired, the wall tie of the third embodiment may be provided with an elongate aperture through the mortar course would extend, but as an alternative the tie may be provided with a plurality of small apertures through which the mortar extends, in use. The wall tie further includes a pressed rib 50 forming a water barrier as described above in relation to Figures 1 and 2.

[0026] In each of the embodiments the U or rounded V-shape in cross-section of the central region of the tie ensures that the tie has good strength in compression and the overall configuration of each embodiment produces a strong and effective tie utilizing a minimum of material so as to optimise cost efficiency, in relation to conventional ties of comparable strength.

Claims

1. A wall tie comprising an elongate member having a central portion (12) and first and second opposite end portions integral therewith, at least said first end portion being arranged to be embedded in a mortar course between brick or block courses of a wall or leaf of a wall, and, said wall tie being characterised in that said first end portion includes an elongate region (17) of V-shaped cross-section the width and depth of which increases from a minimum at the end of the region (17) adjacent said central portion (12).

2. A wall tie as claimed in Claim 1, characterized by being formed as a shaped metal strip.

3. A wall tie as claimed in Claim 1 or Claim 2, characterized in that said region of V-shaped cross-section is part of a region of said first end portion of an inverted W-shaped cross-section.

4. A wall tie as claimed in any one of Claims 1 to 3, characterized by a generally flat region (42) between said central portion and said first end portion to facilitate manual bending allowing vertical adjustment of the wall tie.

5. A wall tie as claimed in any one of Claims 1 to 4, characterized by an upstanding wall (22, 48) extending generally perpendicularly to the length of the wall tie.

6. A wall tie as claimed in Claim 5, characterized in that the upstanding wall (22, 48) subtends an angle of 85 to 90° with the horizontal, in use.

7. A wall tie as claimed in Claim 5 or Claim 6, characterized in that the upstanding wall (22) defines part of the boundary of an aperture (20) provided in the wall tie.

Patentansprüche

1. Maueranker, der ein längliches Element mit einem mittleren Abschnitt (12) und ersten und zweiten entgegengesetzten, damit zusammenhängenden Endabschnitten aufweist, wobei mindestens der erste Endabschnitt so angeordnet ist, daß er in einer Mörtelschicht zwischen Ziegel- oder Blockschichten einer Wand oder der Schale einer Mauer eingebettet wird, und wobei der Maueranker dadurch gekennzeichnet ist, daß der erste Endabschnitt einen länglichen Bereich (17) mit V-förmigem Querschnitt umfaßt, dessen Breite und Tiefe von einem Minimum am Ende des Bereiches (17) angrenzend an den mittleren Abschnitt (12) aus zunehmen.

2. Maueranker nach Anspruch 1, dadurch gekennzeichnet, daß er als Formmetallstreifen gebildet wird.

3. Maueranker nach Anspruch 1 oder Anspruch 2, dadurch gekennzeichnet, daß der Bereich mit V-förmigem Querschnitt ein Teil eines Bereiches des ersten Endabschnittes mit einem umgekehrten W-förmigen Querschnitt ist.

4. Maueranker nach einem der Ansprüche 1 bis 3, gekennzeichnet durch einen im allgemeinen flachen Bereich (42) zwischen dem mittleren Abschnitt und dem ersten Endabschnitt, um das manuelle Biegen zu erleichtern, wodurch eine vertikale Anpassung des Maueranker gestattet wird.

5. Maueranker nach einem der Ansprüche 1 bis 4, gekennzeichnet durch eine aufrechtstehende Wand (22, 48), die sich im allgemeinen senkrecht zur Länge des Maueranker erstreckt.

6. Maueranker nach Anspruch 5, dadurch gekennzeichnet, daß die aufrechtstehende Wand (22, 48) bei der Benutzung einen Winkel von 85 bis 90° zur Horizontalen abgrenzt.

7. Maueranker nach Anspruch 5 oder Anspruch 6, dadurch gekennzeichnet, daß die aufrechtstehende Wand (22) einen Teil der Grenze einer Öffnung (20) festlegt, die im Maueranker vorhanden ist.

Revendications

1. Ancrage pour maçonnerie comprenant un élément allongé comportant une partie centrale (12) et des première et deuxième parties d'extrémité qui en font partie intégrante, au moins ladite première partie d'extrémité étant agencée de sorte à être noyée dans un lit de mortier entre des couches de briques ou de blocs d'un mur ou d'un panneau d'un mur, ledit ancrage pour maçonnerie étant caractérisé en ce que ladite première partie d'extrémité englobe une région allongée (17) ayant une section transversale en V, la largeur et la profondeur correspondantes étant accrues à partir d'un minimum au niveau de l'extrémité de la région (17), adjacente à ladite partie centrale (12).

2. Ancrage pour maçonnerie selon la revendication 1, caractérisé en ce qu'il a la forme d'une bande métallique.

3. Ancrage pour maçonnerie selon les revendications 1 ou 2, caractérisé en ce que ladite région à section transversale en U fait partie d'une région de ladite première partie d'extrémité ayant une section transversale en W inversé.

4. Ancrage pour maçonnerie selon l'une quelconque des revendications 1 à 3, caractérisé par une région généralement plate (42) entre ladite partie centrale et ladite première partie d'extrémité pour faciliter un pliage manuel permettant un ajustement vertical de l'ancrage de maçonnerie.

5. Ancrage pour maçonnerie sel on l'une quel conque des revendications 1 à 4, caractérisé par une paroi verticale (22, 48) s'étendant en général perpendiculairement à la longueur de l'ancrage de maçonnerie.

6. Ancrage pour maçonnerie selon la revendication 5, caractérisé en ce que la paroi verticale (22, 48) forme en service un angle de 85 à 90° par rapport à l'horizontale.

7. Ancrage pour maçonnerie selon les revendications 5 ou 6, caractérisé en ce que la paroi verticale (22) définit une partie de la limite d'une ouverture (20) formée dans l'ancrage de maçonnerie.

FIG 1

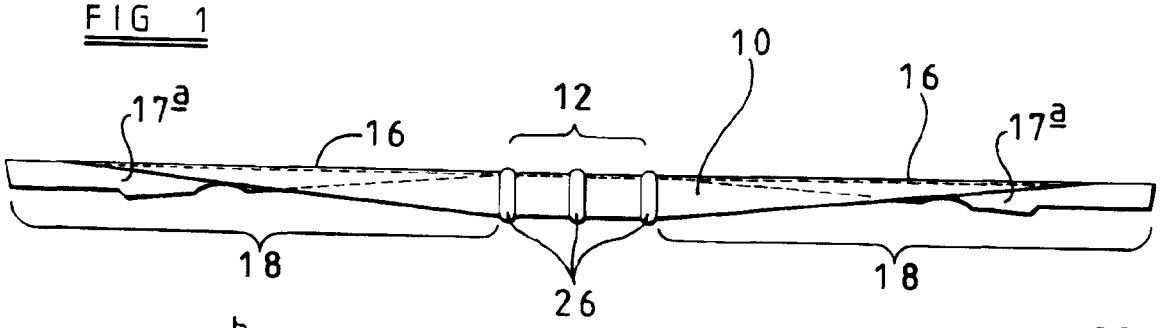

FIG 2

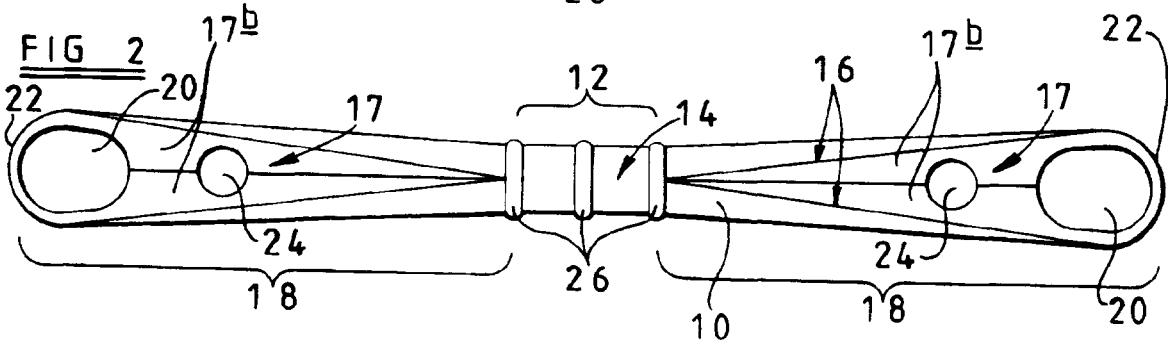

FIG 3



FIG 4

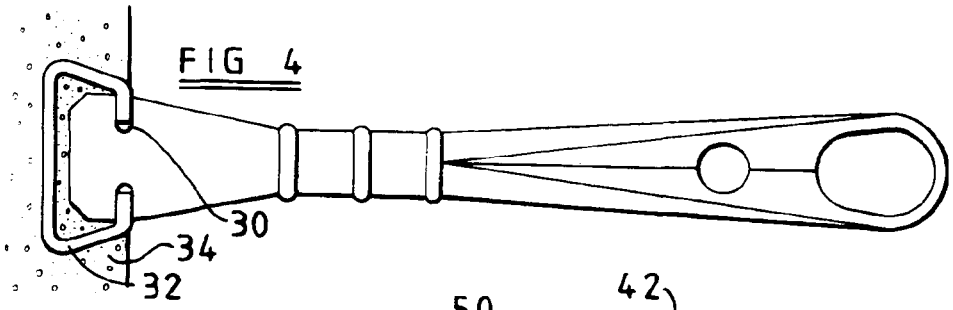

FIG 5

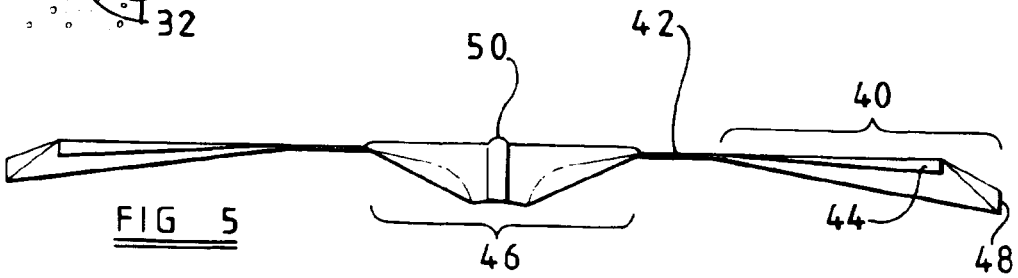

FIG 6

