US 20110114533A1

(19) **United States**

(12) **Patent Application Publication**

(10) **Pub. No.: US 2011/0114533 A1**

(43) **Pub. Date: May 19, 2011**

**Le**

(54) **TABLE UTENSIL REST**

(76) Inventor: **Uyen D. Le**, (US)

(21) Appl. No.: **12/836,010**

(22) Filed: **Jul. 14, 2010**

**Related U.S. Application Data**

(60) Provisional application No. 61/261,932, filed on Nov. 17, 2009.

**Publication Classification**

(51) **Int. Cl.**
***B65D 85/00*** (2006.01)

(52) **U.S. Cl.** ..... **206/553**

(57) **ABSTRACT**

One embodiment of the table utensil rest **1** has a top surface **2**, base **3**, front surface **4**, rear surface **5**, groove **8** and slit **11** in the middle of groove **8**. Top surface **2**, base **3**, front surface **4** and rear surface **5** can be one continuous surface or a combination of surfaces that create a plane to provide support to the structure of the table utensil rest **1**. Table utensil rest **1** can have various combinations of grooves **8** and slits **11**. Other embodiments are described and shown.

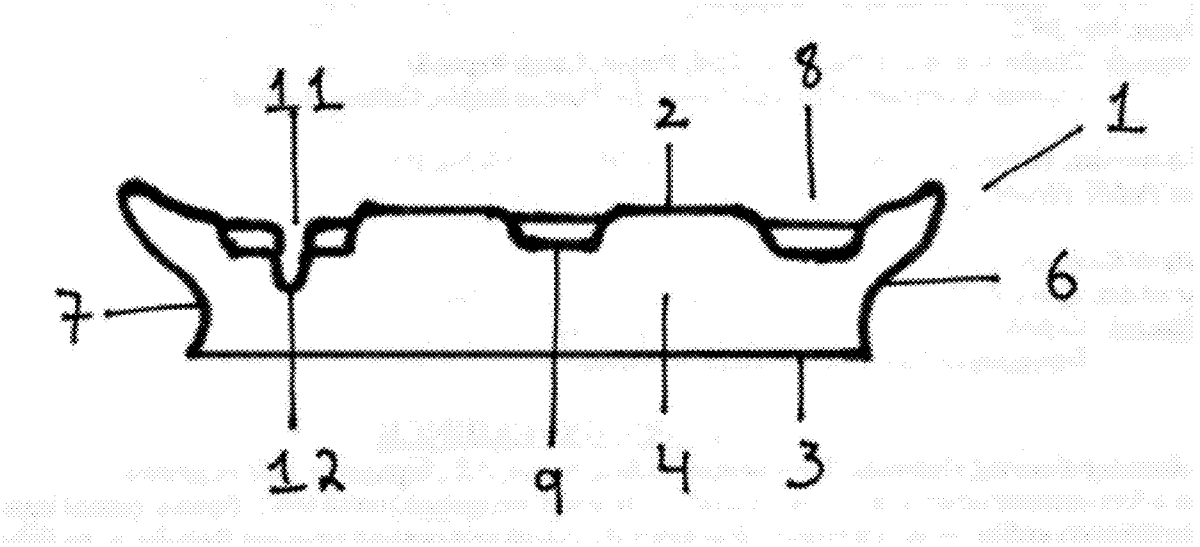

FIG. 1

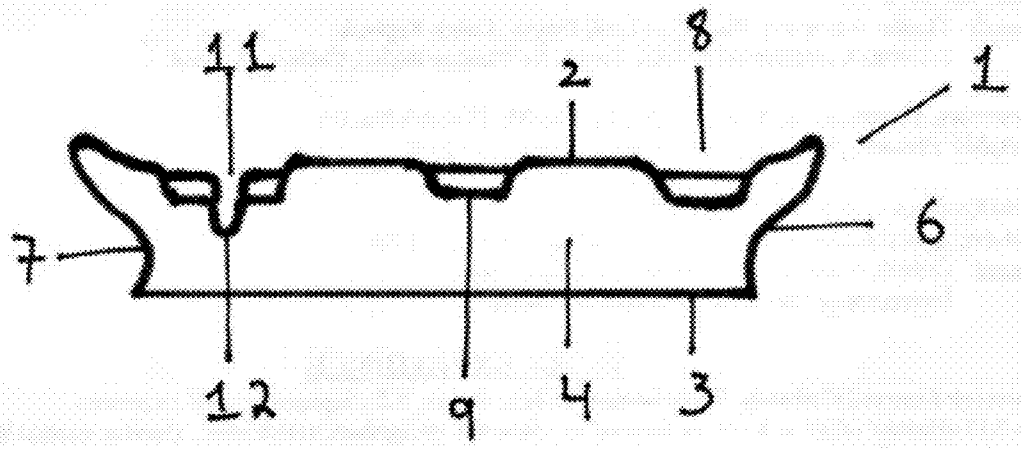


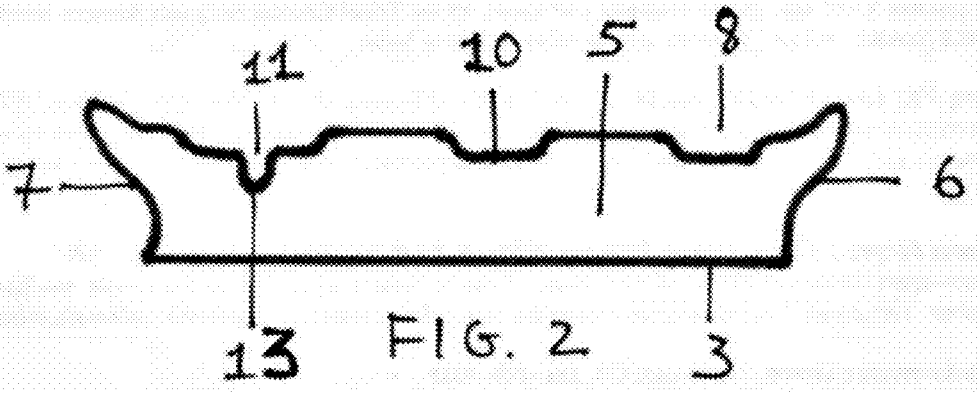


FIG. 2

FIG. 3

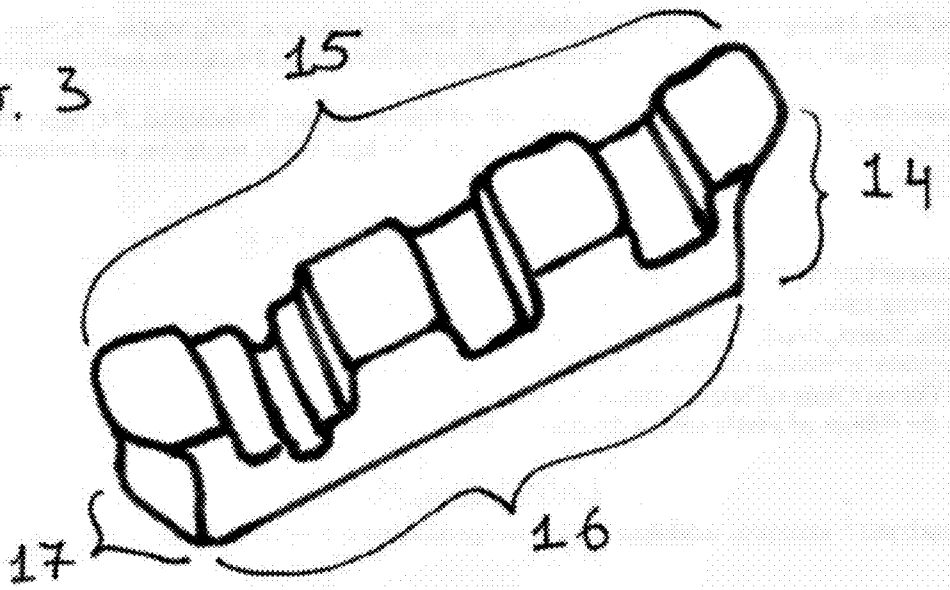

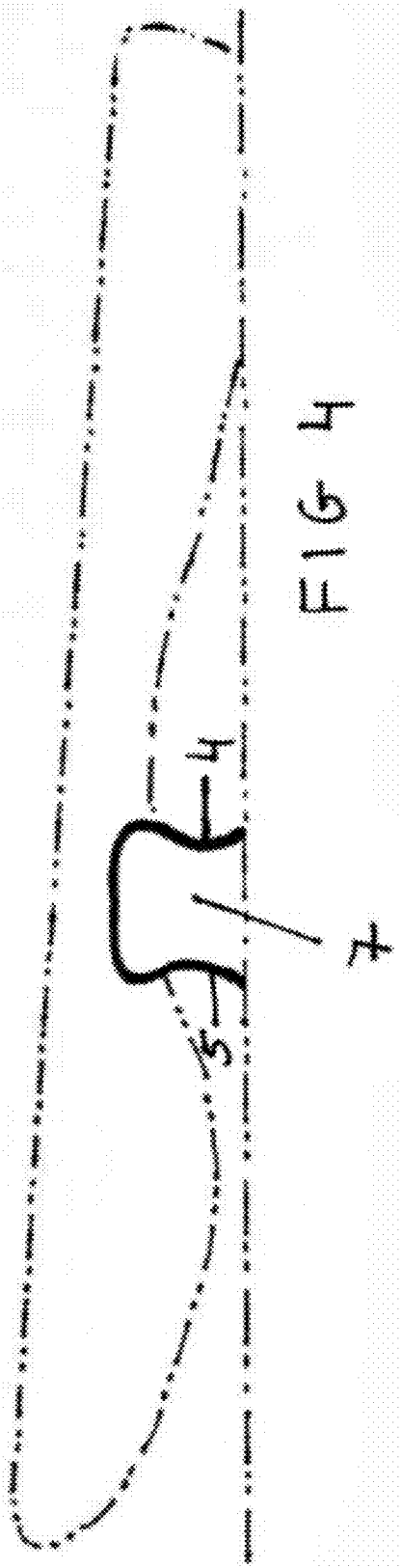


FIG 4

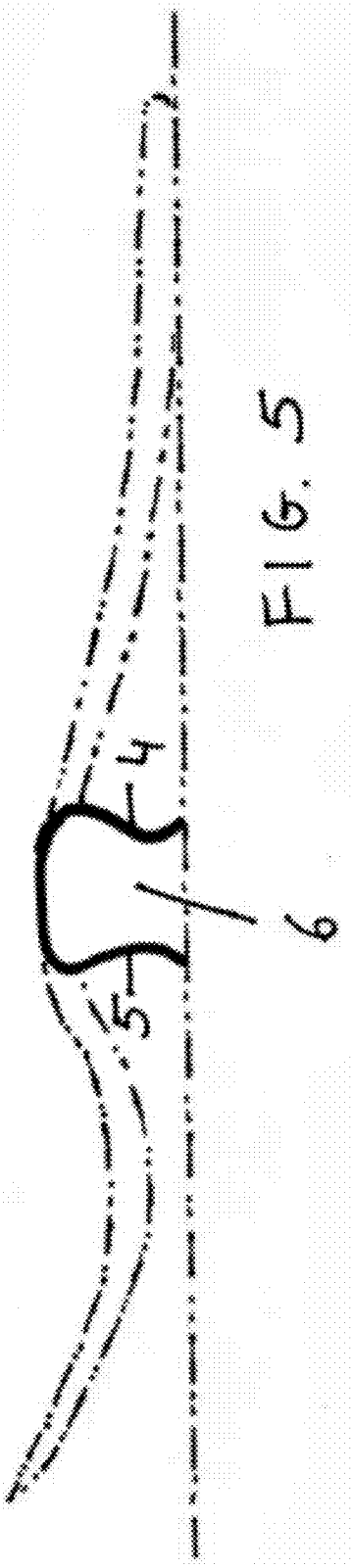


FIG. 5

FIG. 6

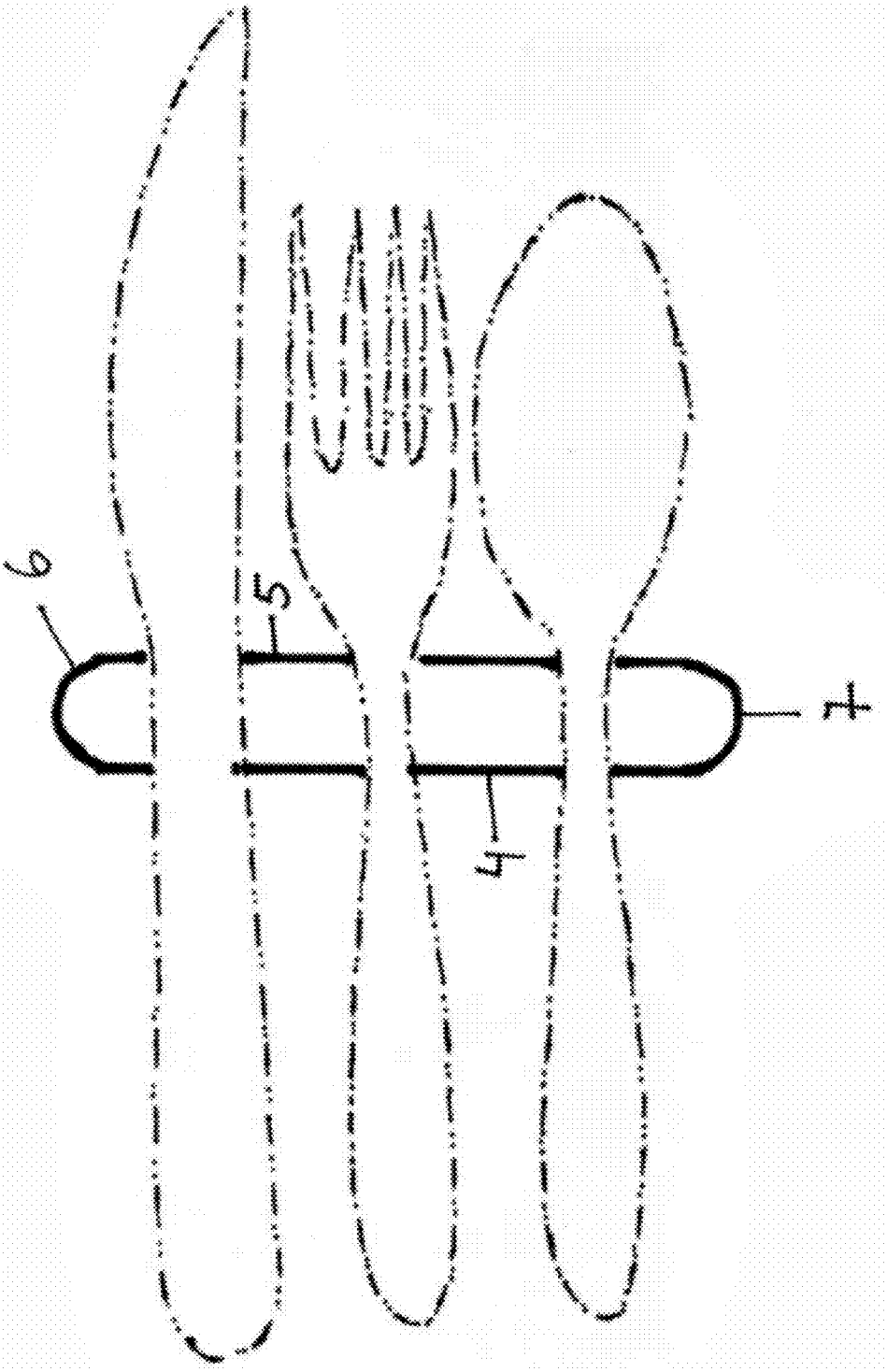

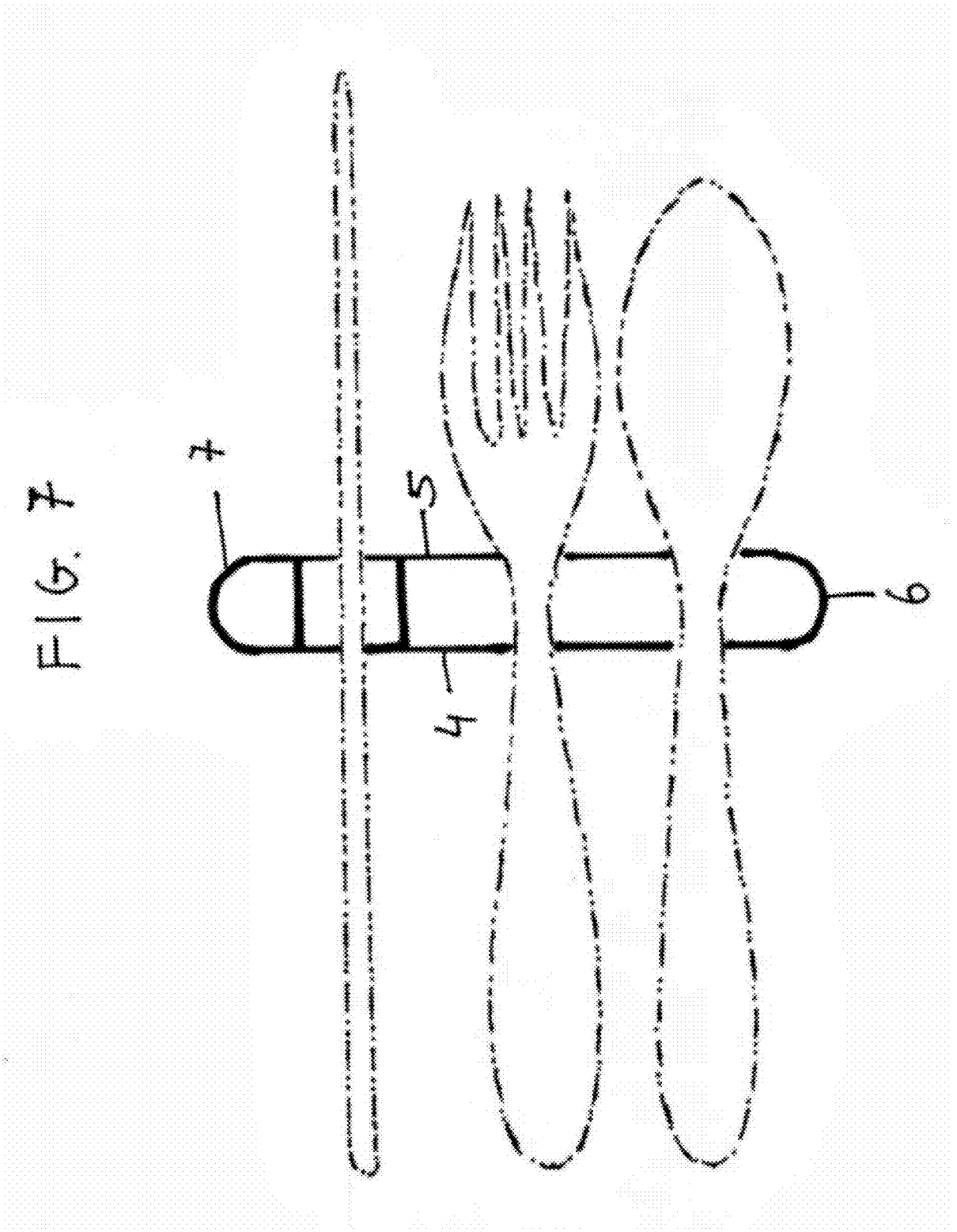


FIG. 7

FIG. 8




FIG. 9

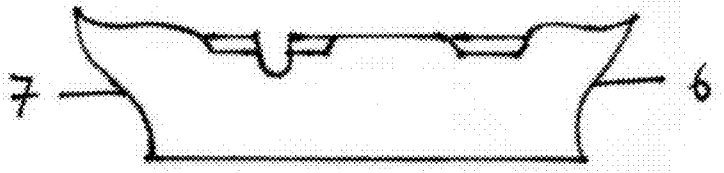


FIG. 10

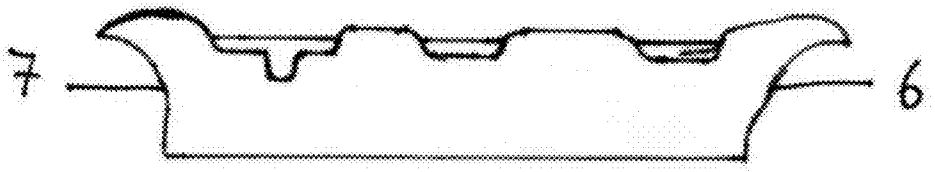


FIG. 11

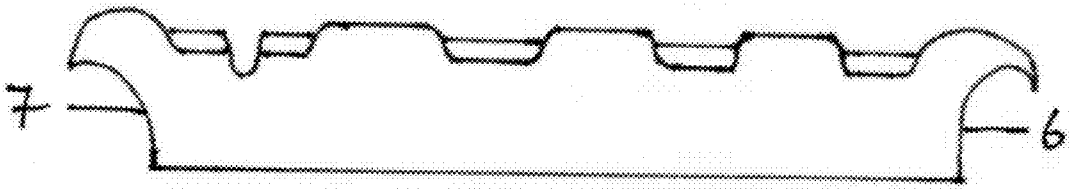

FIG. 12

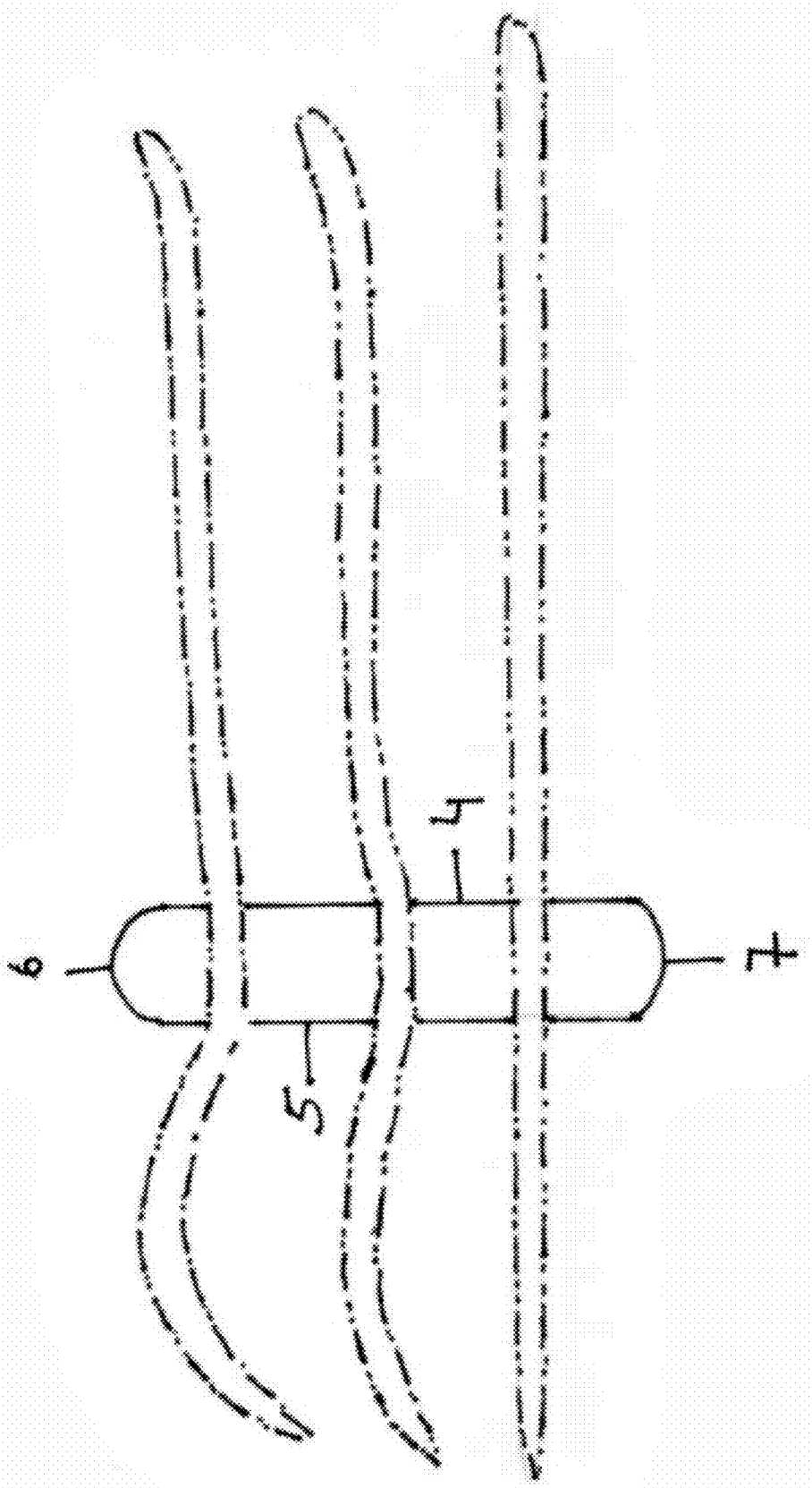

FIG. 15

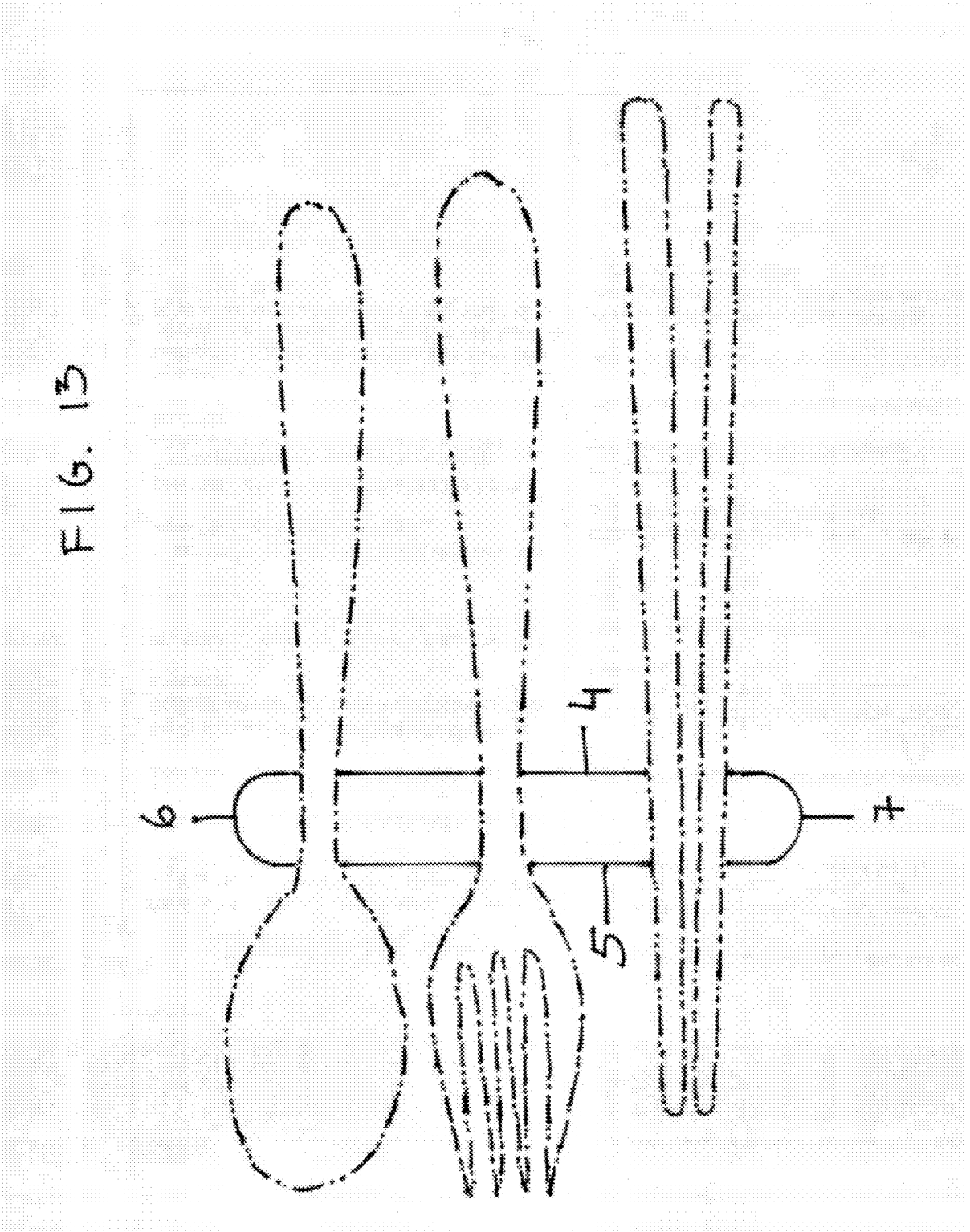

# TABLE UTENSIL REST

## CROSS-REFERENCE TO RELATED APPLICATIONS

**[0001]** The application claims the benefit of provisional patent application Ser. No. 61/261,932, filed 2010 Nov. 17 by the present inventor.

## FEDERALLY SPONSORED RESEARCH

**[0002]** Not Applicable

## SEQUENCE LISTING OR PROGRAM

**[0003]** Not Applicable

## BACKGROUND

**[0004]** 1. Field

**[0005]** The application generally relates to a support for table utensils, specifically to a support for eating spoons, forks, knives, and serving utensils in an eating or dining setting.

**[0006]** 2. Prior Art

**[0007]** There is a constant concern with table hygiene in both public and private settings such as restaurant table tops and private settings such as the household table and counter tops due to the ever growing resilient bacteria and the numerous infectious diseases such as the swine flu and bird flu. Therefore, most people attempt to prevent their utensil from getting contaminated by placing their utensils on a napkin or another clean plate, in which case, all those means to prevent contamination creates unnecessary waste of resources such as paper, water, and other energy.

**[0008]** There are various numerous designs, means and inventions available such as the common knife and chopstick rests or the silverware rests made by Frieling that aim to address the hygiene issues associated with eating and dining for eating utensils such as eating spoons, forks, knives and chopsticks. A common knife or chopstick rest is generally a small horizontal bar, raised slightly above a surface. The Frieling silverware rest is a 7 cm×11 cm×2.5 cm tray with one side cut out to allow a combination of two eating utensils to rest within the tray's horizontal surface.

**[0009]** As for serving utensils such as serving spoons, forks, spatulas, knives, ladles, cheese tools, pasta servers, pie servers and the like, there is one common means of rest: the spoon rest. A spoon rest generally ranges from 15 cm-22 cm in length, 8 cm-11 cm in width, 1 cm-8 cm in height. Therefore, the spoon rest is sizable on a table surface.

**[0010]** U.S. patent application publication 2008/0060206 by DeSalvo (2008) attempts to address the hygienic usage of a spoon, knife or fork by the use of a hook. US patent application publications 2007/0084063 (2007) and 2005/0028386 (2005) both by Hughes are also attempts to address the hygiene issue by using a supporting member that is an integral part of the handle to prevent contact of kitchen utensils on counter surface.

**[0011]** Other prior arts that attempt to address utensil hygiene are: U.S. Pat. No. 7,266,865 to Rodin (2007) for of a combination napkin clip and utensil rest; U.S. Pat. No. 5,785,238 to Tai (1998) for a combined package and rest for chopsticks; U.S. design patent 367,405 to Bridger (1996) of an ornamental design for a eating utensil holder; U.S. Pat. No. 5,411,141 to Bounds (1995) for a collapsible, foldable and disposable eating utensil support; U.S. design patent 326,591 to Hall (1992); U.S. Pat. No. 4,940,199 to Hall (1990) is for a collapsible, foldable and disposable eating utensil support; U.S. Pat. No. 4,893,768 to Hall (1990) for a container cap that can be used as a utensil rest; U.S. Pat. No. 4,834,328 to Hall (1989) for a collapsible, foldable and disposable utensil rest; U.S. design patent 292,861 to Dorper (1987) of an ornamental design for a knife rest; U.S. design patent 255,311 to Dunne (1980) is a kitchen utensil holder; U.S. design patent 244,340 to Ashton (1977) for an ornamental design for a knife rest; U.S. Pat. No. 2,651,927 to Mullins (1953) for a knife cradle or rest; and U.S. Pat. No. 2,639,081 to Metzger (1953) for a collapsible, and foldable and disposable holding insert for articles.

**[0012]** U.S. design patent 446,242 to Hall (2001) is another obtrusive utensil rest for three items; U.S. Pat. No. 6,604,714 to Hall (2003) for the same obtrusive utensil display article; U.S. design patent 378,564 to Hall (1997) for an ornamental design of a utensil support. The design appears like an elongated tray that has indentations and grooves on both opposing surfaces to place three (3) eating utensils simultaneously. However, the half of utensil utilized surface or head is rested across said design, which also means that the utilized part of the utensils are contaminating the utensil rest.

**[0013]** For all of the aforementioned designs, means, and inventions for table utensil rests, there are numerous disadvantages:

**[0014]** (a) Using the spoon rest for aforementioned serving utensils takes a significant space in an eating or dining setting due to its size. Further, a spoon rest can not accommodate most larger serving utensils in an unobtrusive manner. Most serving utensils are rested perpendicular to a spoon rest. Thus the will take more than twice the surface space between a spoon rest and a serving utensil.

**[0015]** (b) Some of the aforementioned collapsible, foldable and disposable eating utensil rests take time and efforts in folding to create a structure that would hold the utensils. Moreover, the disposable nature of those rests creates unnecessary waste in the green conscientious environment.

**[0016]** (c) Some of the aforementioned eating utensil rests such as the Frieling silverware rest take as much space as another small plate. Further, the Frieling silverware rest will require washing because the eating utensil will have direct contact with the rest's surface.

**[0017]** (d) Some of the aforementioned eating utensil rests do the very opposite of the table utensil rest because it requires all the utensils' utilized surface that has direct contact with food to be place on the rest; and whereas, the table utensil rest requires only the non-utilized areas such as the neck of handle to touch the table utensil rest. Moreover, for the most part, the table utensil rest can be re-used numerous times without cleansing because none of the utilized or contaminated surface will be touching the table utensil rest.

**[0018]** (e) All of the aforementioned silverware rest cannot accommodate serving utensils in the same manner as eating utensils like the table utensil rest.

## SUMMARY

**[0019]** In accordance with one embodiment of a table utensil rest comprises a base to provide support on any horizontal surface, a top surface, a front surface, a rear surface, a minimum of one groove that can have a slit in the middle, a height

that allows sufficient clearance of utensils from any surface, and sufficient spacing between grooves to prevent overlapping of utensils.

## DRAWINGS

**[0020]** Figures
**[0021]** FIG. **1** is a frontal view of the utensil rest.
**[0022]** FIG. **2** is a rear view of the utensil rest.
**[0023]** FIG. **3** is a perspective view of the utensil rest.
**[0024]** FIG. **4** is a side view of utensil rest with a vertical knife placement on a horizontal surface.
**[0025]** FIG. **5** is a side view of utensil rest with a flat fork or spoon placement on a horizontal surface.
**[0026]** FIG. **6** is a top view of utensil rest with flat placement of knife, fork, and spoon.
**[0027]** FIG. **7** is a top view of utensil rest with vertical placement of knife and flat placement of fork and spoon.
**[0028]** FIG. **8** illustrates an embodiment of utensil rest with one groove and slit combination.
**[0029]** FIG. **9** illustrates an embodiment of utensil rest with two (2) grooves and slit combination.
**[0030]** FIG. **10** illustrates an embodiment of utensil rest with three (3) grooves and slit combination.
**[0031]** FIG. **11** illustrates an embodiment of utensil rest with four (4) grooves and slit combination.
**[0032]** FIG. **12** is a top view of utensil rest with vertical placement of knife, fork and spoon.
**[0033]** FIG. **13** is a top view of utensil rest with placement of chopsticks and flat placement of fork and spoon.

## DRAWINGS

### Reference Numerals

**[0034]** **1**. table utensil rest
**[0035]** **2**. top surface
**[0036]** **3**. base
**[0037]** **4**. front surface
**[0038]** **5**. rear surface
**[0039]** **6**. right end
**[0040]** **7**. left end
**[0041]** **8**. groove
**[0042]** **9**. front groove base
**[0043]** **10**. rear groove base
**[0044]** **11**. slit
**[0045]** **12**. front slit base
**[0046]** **13**. rear slit base
**[0047]** **14**. height
**[0048]** **15**. top width
**[0049]** **16**. bottom width
**[0050]** **17**. depth

## DETAILED DESCRIPTION

**[0051]** Common table utensils are forks, knifes, spoons, and chopsticks and a range of serving utensils such as serving spoons, forks, spatulas, knives, ladles, cheese tools, pasta servers, pie servers and the like. Table utensil rest **1** in FIGS. **1-3** comprises of a top surface **2**, base **3**, front surface **4**, rear surface **5**, right end **6**, left end **7**, groove **8** and slit **11**. Top surface **2**, base **3**, front surface **4** and rear surface **5** can be one continuous surface or a connection of numerous surfaces that create on the same directional plane to provide support to the structure of the table utensil rest **1**.

**[0052]** Table utensil rest **1** can have several embodiments, as illustrated in FIGS. **8-11**, depending on the preference of the manufacturers. Table utensil rest **1** can have one (1) to five (5) grooves **8**. Modern informal plate settings can range from having two (2) utensils on each side of a plate to three (3) utensils together on only the right side of the plate. Formal plate settings generally comprises of three (3) utensils on each side of the plate. Additionally, users may prefer more than three (3) utensils together on the right side of the plate. Further, restaurants that serve Asian cuisines generally offer chopsticks to the patrons. Table utensil rest **1** accommodates the placement of any combination of forks, knives, spoons, and chopsticks, as illustrated in FIG. **13**. Further, the table utensil rest can accommodate serving spoons, forks, spatulas, knives, ladles, cheese tools, pasta servers, pie servers and the like in a dinning setting.

**[0053]** Table utensil rest **1** can be made from various materials available on the market, but not limited to, stainless steel, bronze, glass, plastic, polyresin, ceramics, clay, wood, stone, other metals, other man-made materials, and the like, as long as the materials can support the utensils.

**[0054]** Groove **8** allows secured placement of table utensils. The width of groove **8** can range between 9 mm to 20 mm in order to accommodate most table utensils including serving utensils. The neck, the space right after the head that is used for eating or serving, of a common table fork or spoon is can range from 8 mm to 11 mm and up to 20 mm for serving utensils. The neck of a common table knife can range from 13 mm to 16 mm in width. Therefore, it's preferable that groove **8** for a fork or spoon ranges from 9 mm to 13 mm in width, sufficiently wide to accommodate the width of a fork or spoon. It's preferable that groove **8** for a knife, chopsticks or serving utensils ranges 14 mm to 20 mm in width with slit **11** in the center, as illustrated in FIGS. **8-11**. Slit **11** allows the vertical placement a knife because depending on users' preference. The width of slit **11** is approximately 1.5 mm-5 mm. Front slit base **12** is at least 2 mm from front groove base **9**. Rear slit base **13** is at least 2 mm from rear groove base **10** as long as it allows knife clearance from table top in the vertical position, as illustrated in FIG. **4**. Base **9** can be one continuous surface or numerous fragmented surfaces that look like legs so long as they provide stability to the table utensil rest.

**[0055]** However, it foreseeable that table utensil rest in FIGS. **9-11** can have various combination of groove **8** and slit **11** with a width between 1.5 mm-5 mm for vertical placement of spoons and forks as illustrated in FIG. **12**.

**[0056]** Front groove base **9** on the front surface **4** is 2 mm lower from top surface **2** than rear grove base **10** on rear surface **5** in order to create a slight angle. However, the angle may not be necessary in all designs. The preferred embodiment is that front groove base **9** on front surface **4** is 4 mm from top surface **2** and rear groove base **10** on the rear surface **5** is 2 mm from top surface **2**. The height difference creates a slight angle that provides better support for utensils because the angle follows the natural angle created by the placement even though the angle is not necessary for all designs of the table utensil rest, as illustrated in FIGS. **4** & **5**. Further, the head of a fork, knives or spoons is curved, which requires additional clearance height from any horizontal surface on rear surface **5**, as illustrated in FIGS. **4** & **5**.

**[0057]** Spacing between grooves **8** depends on the preference of the manufacturer. For flat display, spacing should be sufficiently wide to allow flat placement of table utensils without overlapping, as illustrated in FIG. **6**. The height of

rear groove base **10** and front groove base **9** from base **3** should be sufficient to allow clearance knives, forks, and spoons from the table top while providing stability and support to the utensils, as illustrated in FIGS. **4** & **5**.

**[0058]** Height **14** can be at any measurement so long as it is sufficient to allow clearance of spoons, forks or knives from the horizontal surface as long as it provides stability and support for the utensils. Top width **15** can be at any measurement depending on the number of grooves **8** that it accommodates and spacing requirements between grooves **8**, as described above. Bottom width **16** can be at any measurement as long as it provides stable support for the utensils on the horizontal surface. Depth **17** can be at any measurement as long as it provides sufficient stability, security and support for the utensils. Further, height **14**, top width **15**, bottom width **16** and depth **17** also depend on the esthetic preference of the manufacturers. Further, it's preferable that depth **17** is not greater 40 mm.

**[0059]** It is understood that there can be various modifications and combinations of groove **8**, slit **11**, top width **15**, bottom width **16**, height **14**, depth **17** of the preferred embodiments. Right end **6** and left end **7** can be at various lengths from the center of the groove **8** and can be at various height clearances from a surface, depending on the preference of the manufacturers.

## Advantages

**[0060]** From the description above, there are numerous advantages of the embodiments of the table utensil rest as follow:

**[0061]** a. The table utensil rest will accommodate large serving utensils without taking any additional space like a spoon rest.

**[0062]** b. The table utensil rest can be used without the requirement of continuous cleaning because only the non-utilized part of the utensils will have direct contact the table utensil rest's surface.

**[0063]** c. The table utensil rest will take a very small space on a surface compares to other silverware rest available on the market today to accommodate more than one eating utensils.

## Conclusion, Ramification, and Scope

**[0064]** Accordingly, in this ever growing resilient bacteria environment coupled with green consciousness, the table utensil rest can accommodate all eating and serving utensils to provide the need for dining hygiene and reduction of waste of resources used in the attempt to keep one's utensils from being contaminated. The table utensil rest has numerous advantages:

**[0065]** it takes a significantly smaller space than a spoon rest for serving utensils;

**[0066]** it is more versatile than a spoon rest because it can accommodate most larger serving utensils in an unobtrusive manner, whereas, most serving utensils are rested perpendicular to a spoon rest that would take more than twice the surface space between a spoon rest and a serving utensil;

**[0067]** it organizes eating utensils neatly without being obtrusive;

**[0068]** it does not require continuous washing, and therefore, save resources;

**[0069]** it prevents direct contact of the utilized part of the utensil from touching the table utensil rest;

**[0070]** it is versatile because eating utensils and serving utensil can be used by the same embodiment.

**[0071]** Although the description above contains many specifics, these should not be construed as limiting the scope of the embodiments but as merely providing illustrations of some of the presently preferred embodiments. Therefore, the scope of the embodiments should be determined by the appended claims and their legal equivalents rather than by the examples given.

I claim:

**1**. A table utensil rest comprising:

a) A base

b) A top surface,

c) A front surface,

d) A rear surface

e) A minimum of one groove, and

f) A height that allows sufficient clearance of utensils from any surface.

**2**. A table utensil rest in claim **1** wherein said groove can consist of a slit that ranges from 1.5 millimeters to 5 millimeters in width.

**3**. A table utensil rest in claim **1** wherein said groove can range from 9 millimeters to 20 millimeters in width.

**4**. A table utensil rest in claim **1** wherein the maximum number of grooves is five.

**5**. A table utensil rest in claim **1** wherein any combination of said grooves and said slits can be achieved.

**6**. A table utensil rest in claim **1** wherein said base can be one continuous surface or a connection of numerous surfaces on the same directional plane so long they provide structural stability to said table utensil rest.

**7**. A table utensil rest in claim **1** wherein said top surface can be one continuous surface or a connection of numerous surfaces on the same directional plane so long as they provide structural stability to said table utensil rest.

**8**. A table utensil rest in claim **1** wherein said front surface can be one continuous surface or a connection of numerous surfaces on the same directional plane so long as they provide structural stability to said table utensil rest.

**9**. A table utensil rest in claim **1** wherein said front surface can be one continuous surface or a connection of numerous surfaces on the same directional plane so long as they provide structural stability to said table utensil rest.

* * * * *