S. W. FRANCIS.

SLED.

No. 172,109. Patented Jan. 11, 1876.

Fig. 1.

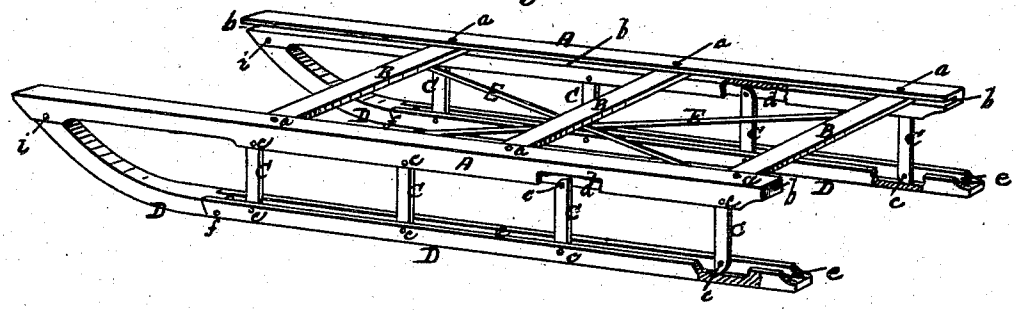

Fig. 2.

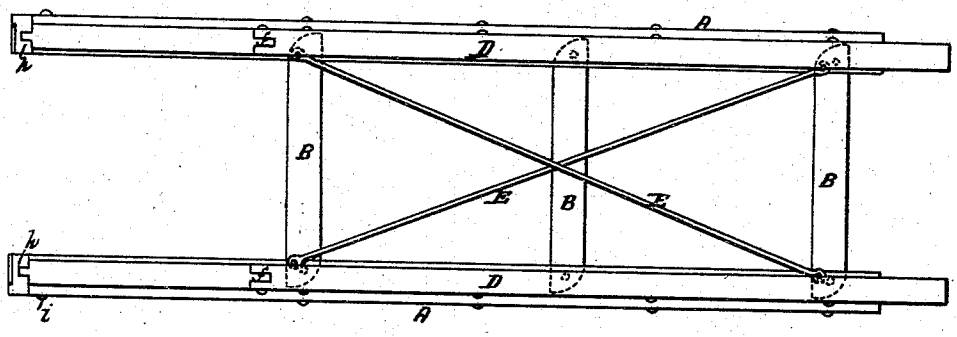

Fig. 3.

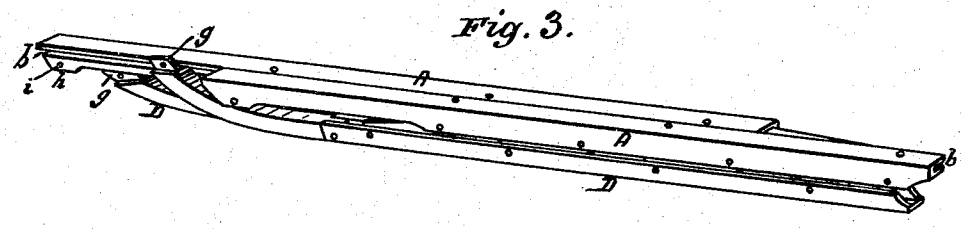

Fig. 4.

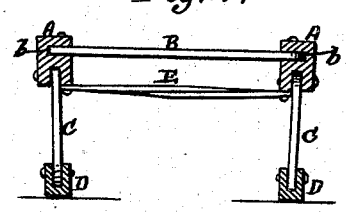

Witnesses:

Ewell A. Dick,

D. P. Lowe.

Inventor:

Saml W. Francis

by Attys Pollok & Haley.

N. PETERS, PHOTO-LITHOGRAPHER, WASHINGTON, D. C.

UNITED STATES PATENT OFFICE.

SAMUEL W. FRANCIS, OF NEWPORT, RHODE ISLAND.

IMPROVEMENT IN SLEDS.

Specification forming part of Letters Patent No. **172,109**, dated January 11, 1876; application filed December 29, 1875.

To all whom it may concern:

Be it known that I, SAMUEL W. FRANCIS, of Newport, Rhode Island, have invented certain new and useful Improvements in Sleds, of which the following is a specification:

My invention has for its object a folding sled—that is to say, a sled the parts of which are jointed together, so that when desired they may be folded and assembled within a small compass.

The nature of my invention, and the manner in which the same is or may be carried into effect, will be understood by reference to the accompanying drawing, in which—

Figure 1 is a perspective view of a sled embodying my invention. Fig. 2 is a plan of the under side of the same. Fig. 3 is a view of the sled when folded up. Fig. 4 is a transverse vertical section of the sled shown in Fig. 1.

The sled, in this instance, is composed of five parts—viz., the side rails A, cross-pieces B, standards or supports C, runners D, and ties E.

The cross-pieces B are at each end pivoted on the vertical axes *a* to the side rails A. The ends of the cross-pieces enter grooves *b* in the interior opposite faces of the rails, and these ends are beveled on one side, as shown by dotted lines in Fig. 2, so that the sled may fold up in one direction. The ends on the sides opposite the bevels have a square shoulder, which prevents the folding movement in the other direction. The hinged diagonal ties or braces E, in order to be locked in position, are drawn so as to force the square shoulders of the cross-pieces against the bottom of the grooves *b*, thus making the sled-frame, when unfolded, tight and firm. The ties or braces E are hinged at one end to the rails, and at the other end have hooks adapted to engage pins on said rails. The standards C, which connect the side rails and the runners, are hinged to said rails and runners by horizontal pins *c*, and their ends enter grooves *d e* in the under faces of the rails and the tops of the runners. The ends of the standards are beveled on one side and square on the other, as indicated in the drawing, so as to permit the runners and rails to fold together in one direction. The shoulders prevent tendency to fold in the opposite direction. The bevels on the standards are so located, as indicated in Fig. 1, that the one runner folds against its rail in a direction opposite to that in which the other folds against its rail. For instance, the runner on the left folds by a forward movement, while the runner on the right folds by a rearward movement. This projects the former slightly in advance of its rail, and the latter a little in rear of its rail, as indicated in Fig. 3. To enable the parts to fold as closely as possible together the front curved ends of the runners are hinged at *f* to the main portion of the runners. The points of the curved ends terminate in tenons *g*, which, when the runners are unfolded, enter mortises or grooves *h* in the rails A, and are there secured by pins *i*. In order to fold the sled the pins *i* are removed, and the diagonal ties or braces are disengaged from their pins. The sled can now be folded up with the parts assembled closely together, as indicated in Fig. 3. The cross-pieces B are received within the grooves *b*, and the standards C are received within the grooves *d e*, so that the rails and runners are brought into close contact.

I have above described the manner in which I prefer to carry out my invention. It will be understood, however, that the details of construction may widely vary without departure from the principle of my invention. For instance, a cheap sled can be made, resembling an ordinary boy's sled, divided longitudinally and centrally into two parts, hinged together so as to fold up, and to this folding top may be hinged runners which will also fold up. The requisite braces or equivalent devices for locking and supporting the parts in an unfolded position would, of course, be provided. The sled can be made of wood or any other suitable material.

Having described my invention, what I claim, and desire to secure by Letters Patent, is as follows:

1. In a sled or sleigh, the combination of a body divided and hinged longitudinally, so that the sections will fold together, with runners hinged to said sections, so as to fold against or upon the same, substantially as shown and set forth.

2. In a sled, the combination of a longitudi-

nally-divided hinged and folding top with hinged folding runners and braces, for securing said parts in an unfolded position, substantially as set forth.

3. The grooved side rails and grooved runners, in combination with the hinged cross-pieces and the hinged standards, which connect the runners with the rails, for operation as set forth.

4. The grooved side rails, grooved runners, jointed cross-pieces, and standards, in combination with the diagonal ties or braces, substantially as set forth.

5. In combination with the sled body or top, the hinged connecting-standards and the runners, provided with hinged curved ends, which engage and are detachably connected to the sled body or top, substantially as set forth.

In testimony whereof I have hereunto signed my name this 23d day of December, A. D. 1875.

SAML. W. FRANCIS.

Witnesses:
SAML. R. HONEY,
JAMES T. POWELL.