June 20, 1950 W. ROSENTHAL ET AL 2,512,215

STRAPLESS BRASSIÈRE

Filed April 10, 1948 2 Sheets-Sheet 1

FIG.1.

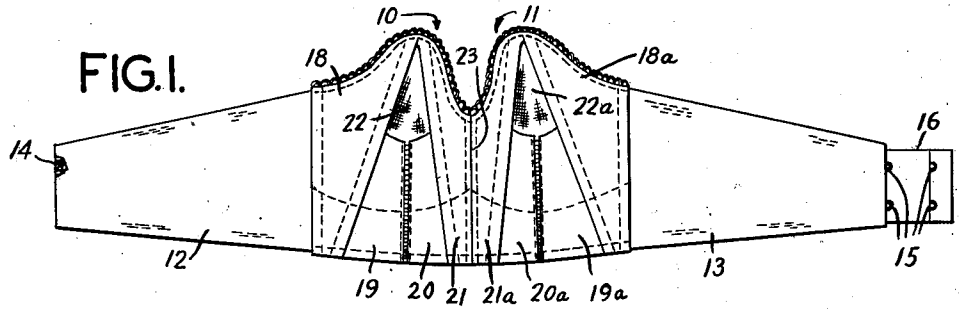

FIG.2.

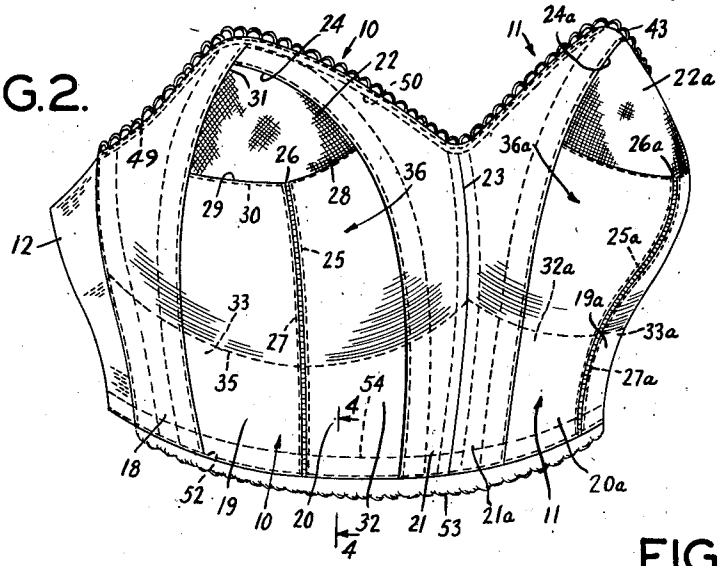

FIG.4.

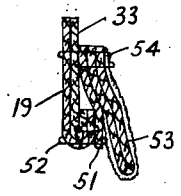

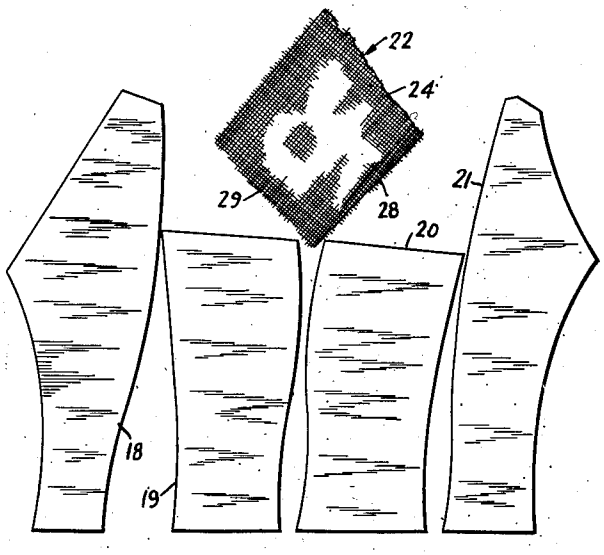

FIG.3.

INVENTORS.
WILLIAM ROSENTHAL &
ERNEST SILVANI
BY
ATTORNEY.

June 20, 1950 W. ROSENTHAL ET AL 2,512,215

STRAPLESS BRASSIÈRE

Filed April 10, 1948 2 Sheets-Sheet 2

FIG.5.

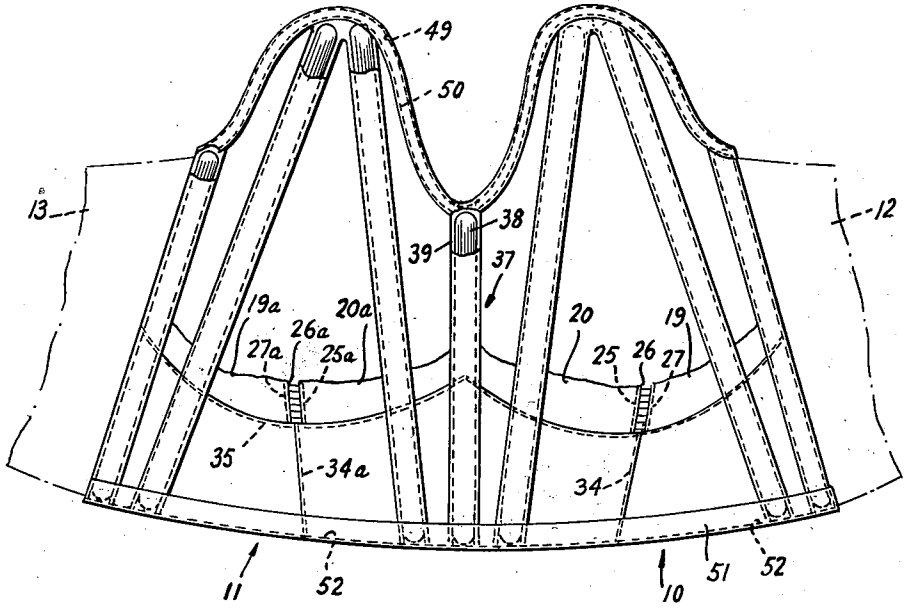

FIG.6.

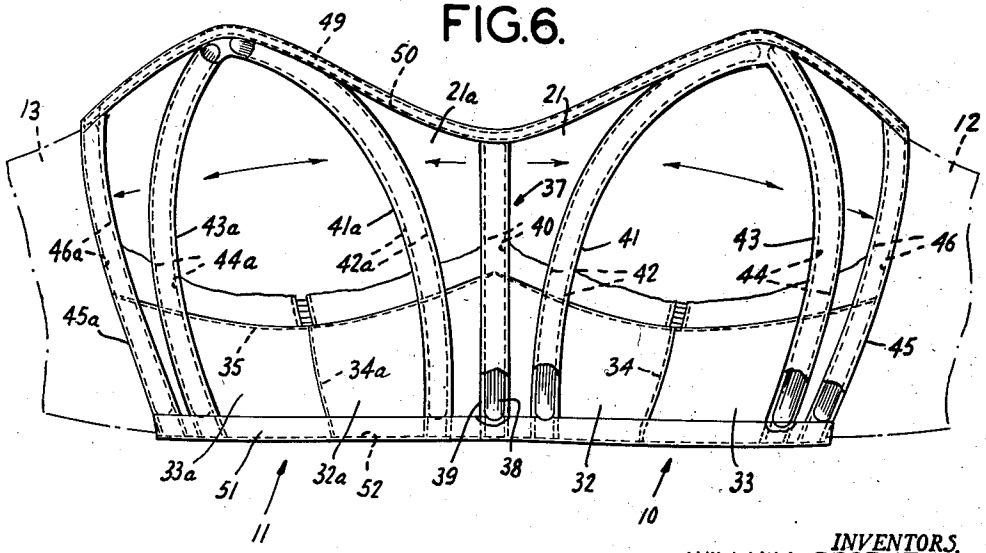

INVENTORS
WILLIAM ROSENTHAL &
ERNEST SILVANI
BY William G. Gluck
ATTORNEY.

Patented June 20, 1950

2,512,215

UNITED STATES PATENT OFFICE

2,512,215

STRAPLESS BRASSIÈRE

William Rosenthal, Bayville, and Ernest Silvani, Brooklyn, N. Y., assignors to Maiden Form Brassiere Co., Inc., New York, N. Y., a corporation of New York

Application April 10, 1948, Serial No. 20,245

1 Claim. (Cl. 2—42)

1

The present invention relates to brassières and more particularly to improvements in strapless brassières.

An important object of the invention is to provide a novel and advantageous form of strapless brassière.

Another object of the invention is to provide a novel and advantageous form of brassière in which each breast-receiving pocket comprises a fabric assembly supported by suitably arranged stays or bones differing in strength whereby the corresponding breast of a wearer when placed in said breast receiving pocket will be supported in the desired position.

Still another object of the invention is to provide a novel and advantageous form of a brassière comprising at each side of its front an arrangement of shaped pieces of fabric and associated stiffening members, adapted to produce proper shaping and positioning of a breast placed therein.

Other objects, features and advantages will appear upon consideration of the following detailed description and of the drawings in which:

Fig. 1 is a view showing the front of a brassière in outstretched flat form;

Fig. 2 is a perspective view of the brassière as it would appear in position on a wearer;

Fig. 3 is a section along the line 3—3 of Fig. 2;

Fig. 4 is a view illustrating the variously shaped pieces of fabric used in forming the breast-supporting part at the left of Fig. 2;

Fig. 5 is a fragmentary view of the inside of the brassière illustrated in Fig. 1, in the form assumed when not in use; and

Fig. 6 is a view similar to Fig. 5 but with the parts in the positions assumed when the brassière is drawn over the breasts of a wearer.

Referring to the drawings and more particularly to Figs. 1 and 2, there is illustrated a brassière comprising a front or central portion comprising two breast-supporting parts 10 and 11, and connected to the outer edges thereof, longitudinally elastic back or closure members 12 and 13 with fastening devices at the outer ends thereof. These fastening devices may comprise hooks 14 at the back face of the outer end of strap 12 and one or more rows of eyes 15 at the front face of an extension or strip 16 at the outer end of strap 13.

Said breast-supporting parts 10 and 11 at the left and right respectively of the center line of the front of the brassière (Figs. 1 and 2), are symmetrical with respect to each other. As indicated in Fig. 4, said breast-supporting part 10 at

2

the left of Fig. 2, is made up of four pieces of body-supporting fabric designated from left to right as 18, 19, 20 and 21, and an additional four sided member 22 to cooperate with said members 18, 19, 20 and 21 as well as cover a breast from above. Preferably said pieces 18, 19, 20 and 21 are made of soft, pliable and ornamental material such as satin. Said member 22 is diamond-shaped and may be made of net material.

The right hand breast-supporting portion (Fig. 2) is made up from left to right of parts 21*a*, 20*a*, 19*a* and 18*a* whose outlines correspond with parts 21, 20, 19 and 18 when either side is turned over on the other. The only difference would be that the satin surfaces would be on the wrong side for one set, a matter which could be adjusted without difficulty. For example, the patterns could be placed on opposite sides of the cloth, that is on the front face of the cloth for the pieces of part 10 and on the rear face for the pieces of part 11.

The arrangement of the parts in the finished article will now be described.

The adjacent edges of the central pieces 21 and 21*a* are inturned and are secured together at a seam 23. The outer edges of pieces 21 and 21*a* are turned back or inturned and overlie respectively, the adjacent inner edges of parts 20 and 20*a* and also parts 22 and 22*a* at their upper and inner edges 24 and 24*a*. The outer edges of parts 20 and 20*a* are turned back and secured by stitches 25 and 25*a* respectively and are connected by crosswise strands 26 and 26*a* respectively to adjacent inturned inner edges of pieces 19 and 19*a* which are secured by lines of stitching 27 and 27*a*.

The upper edges of pieces 20 and 19 are turned in at the back thereof and overlie the lower edges 28 and 29 of member 22 to which they are attached by a line of stitching 30. There is a corresponding arrangement of parts at the right of Fig. 2. The piece 18 at the left of Fig. 2, has an infolded inner edge overlying the outer edge of member 19 and the upper edge 31 of member 22, and with its upper end overlying the upper end of piece 21. The outer edge of piece 18 is turned in and overlies the inner end of elastic back member 12. There is a corresponding arrangement at the right of Fig. 2.

At the rear of the lower ends of pieces 18, 18*a*, 19, 19*a*, 20, 20*a*, 21 and 21*a*, there is a fabric reinforcement, comprising a left central piece 32 (Fig. 2) extending across pieces 20 and 21; a right central piece 32*a* extending across pieces 21*a* and 20*a*; an end piece 33 extending across

pieces 18 and 19 at the left; and an end piece 33a extending across pieces 18a and 19a at the right. At their inner edges central pieces 32 and 32a are folded in with the inner edges of pieces 21 and 21a and all of them are secured together by said seam 23.

The outer edge of said piece 32 reaches the openwork connection comprising the crosswise strands 26 and the end piece 33 extends from said openwork connection to the outer edge of said member 18 in a manner to be described more fully hereinafter. At their adjacent edges pieces 33 and 32 are secured together by a line of stitching 34 which also engages said crosswise strands 26. There is a similar arrangement at the right of Fig. 2.

The inturned upper edges of the pieces of said fabric reinforcement curve downwardly from said center seam 23 to the openwork connection on both sides and then upwardly to the outer edges of said members 18 and 18a. The upper edges of the pieces of said fabric reinforcement are secured to the pieces 18, 19, 20, 21, 21a, 20a, 19a and 18a by means of a line of stitching 35. The curves at the top of said reinforcement cause this part of the garment to fit closely beneath the breasts and to assist in giving the proper shape to the breast-receiving pockets 36 and 36a. As will be brought out hereinafter, the reinforced lower part serves to hold in proper position the lower ends of stays which support and shape the upper part of the brassière including the breast-supporting pockets.

At the inner face of the front behind the centr . seam 23, is a stay 37 which is best shown in Fi . 5 and 6. This stay comprises a flexible bone r member 38 encased between strips or tape 39 which project beyond the edges of the bon t should be noted that the strips 39 extend beyond the ends of the bone 38 to facilitate fastening of the ends of the stay. The stay 37 is secured to said pieces 21 and 21a by lines of stitching 40 which pass through the strips 39 close the edges of bone 38.

Back of the overlapping parts at the outer edge of piece 21, is located a stay 41 which, by lines of stitches 42 is connected to pieces 20, 21 and 22. Back of the overlapping parts at the inner edge of piece 18, a stay 43 is connected to pieces 18, 19 and 22 by lines of stitching 44. At the opposite side of center seam 23 there is a similar arrangement with stay 41a secured in position by lines of stitches 42a, stay 43a secured by lines of stitches 44a. Furthermore a stay 45 is secured by stitches 46 to the overlapped parts of piece 18 and elastic back member 12. Correspondingly a stay 45a is secured by stitches 46a to the overlapped parts of piece 18 and elastic back member 13.

The upper edges of parts 18, 21, 21a and 18a are turned back, and provided with edging 47 at the rear and a strip or tape 48. Then a line of stitches 49 is formed to secure said edging and the upper edge of the tape in place. Also the lower edge of the tape 48 is secured by a line of stitches 50.

The lower edges of parts 18, 19, 20, 21, 21a, 20a, 19a and 18a are turned back and up, and the lower edge of a binding tape 51 is secured thereto by a line of stitches 52 passing below the lower ends of the bones in the stays. At the inner face of said binding tape 51 is placed a fold of cushioning material 53 such as plush, with the folded edge extending beyond the lower edge of the brassière proper. The upper edge of the tape and the upper edges of the folded plush are then fastened to the main structure by a line of stitching 54 which is discontinued at the bones. Obviously the cushioning material tends to prevent discomfort caused by pressure of the lower edge of the brassière against the flesh of the wearer.

The parts 18, 19, 20, 21, 21a, 20a, 19a, 18a, 22 and 22a at the front of the brassière are so shaped and assembled that above the seam or stitches 35 there is much greater fullness than in the lower reinforced portion which in effect constitutes a band to be drawn closely around the body of a wearer and to hold the lower parts of various stays in position. The end stays 45 and 45a tend to distribute the pull of the elastic members 12 and 13 on the front of the brassière.

Preferably the stays 43 and 43a are somewhat stronger than stays 41 and 41a respectively and tend to effect suitable separation of the breasts when placed therein.

As clearly illustrated in Figs. 1 and 5, the two intermediate stays of each breast-supporting part are, when the brassière is not in use, straight and take up fullness from top to bottom while producing the greatest transverse fullness. When, however, the brassière is fastened around the body, the intermediate stays are (Figs. 2 and 6) drawn out sidewise to take up the transverse fullness to fit over the breast and to lower the upper edge of the brassière to give support beneath the breast and to position the net portion over the breast. Of course there is also some bending of the central stay 37 and the edge stays 45 and 45a as the brassière is adjusted on the body. As indicated in Fig. 6, there is considerable downward pressure on the upper ends of the intermediate stays.

It should be understood that various changes may be made and that certain features may be used without others, without departing from the true scope and spirit of the invention.

What is claimed is:

A strapless brassière comprising a fabric front provided with two breast pockets and an intermediate fabric portion having a V-shaped top separating major areas of the breast pockets, of a stay secured to and centrally of said intermediate fabric portion, each breast pocket being fulled, a lower band-like member having two curved upper margins each of which bounds the lower margin of one breast pocket, a pair of stays for and laterally bounding each breast pocket fulled portion and extending across and secured to the said lower band-like area, the stays of each of said pairs of stays converging from their lower ends to an upper point at which they substantially meet in inverted V-formation and with like upward projection of the breast pocket fabric tops, back bands each secured to one side of an appropriate one of the two breast pockets, means for connecting the back bands, and a stay secured adjacent the juncture of each back band and its appropriate breast pocket and extending across and secured to said lower back band member, said pairs of inverted V-positioned stays being flexible and adapted upon pull of the brassière around the body of a wearer to spread apart at the intermediate breast pocket areas with lowering of the upwardly projected tops of the breast pockets, as and for the purpose set forth.

WILLIAM ROSENTHAL.
ERNEST SILVANI.

(References on following page)

REFERENCES CITED

The following references are of record in the file of this patent:

UNITED STATES PATENTS

Number	Name	Date
2,239,056	Schiffer	Apr. 22, 1941
2,267,595	McKeefrey	Dec. 23, 1941
2,406,893	Nunn	Sept. 3, 1946
2,448,919	Shulman	Sept. 7, 1948
2,457,989	Ettleson	Jan. 4, 1949

FOREIGN PATENTS

Number	Country	Date
50,264	France	Oct. 24, 1939
854,188	France	Jan. 4, 1940