Jan. 3, 1961 R. MADEY 2,967,262

MULTI-COLOR DISPLAY TUBE

Filed July 30, 1956 2 Sheets-Sheet 1

Fig 1

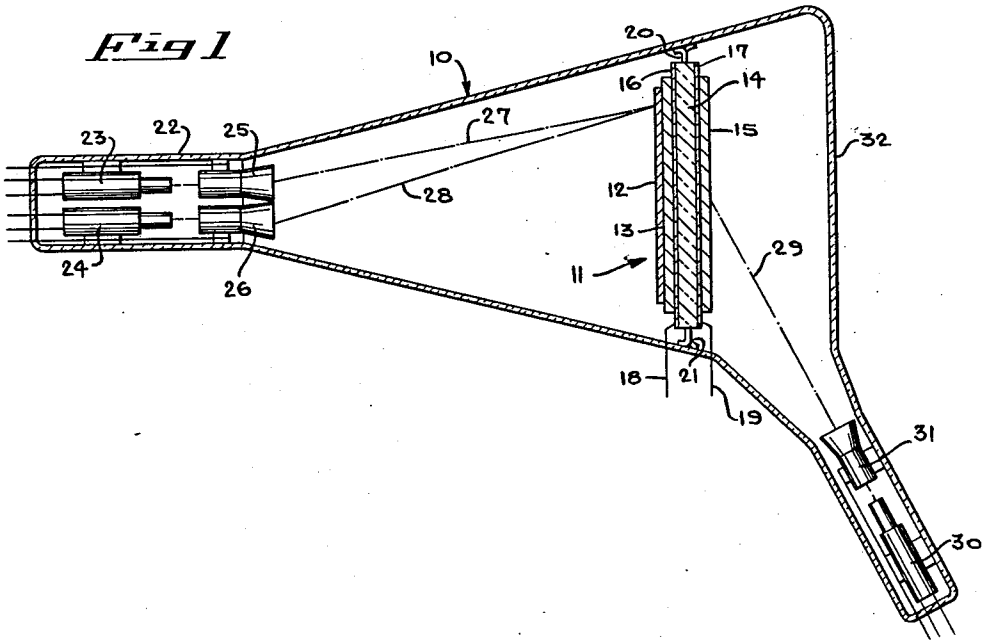

Fig 2

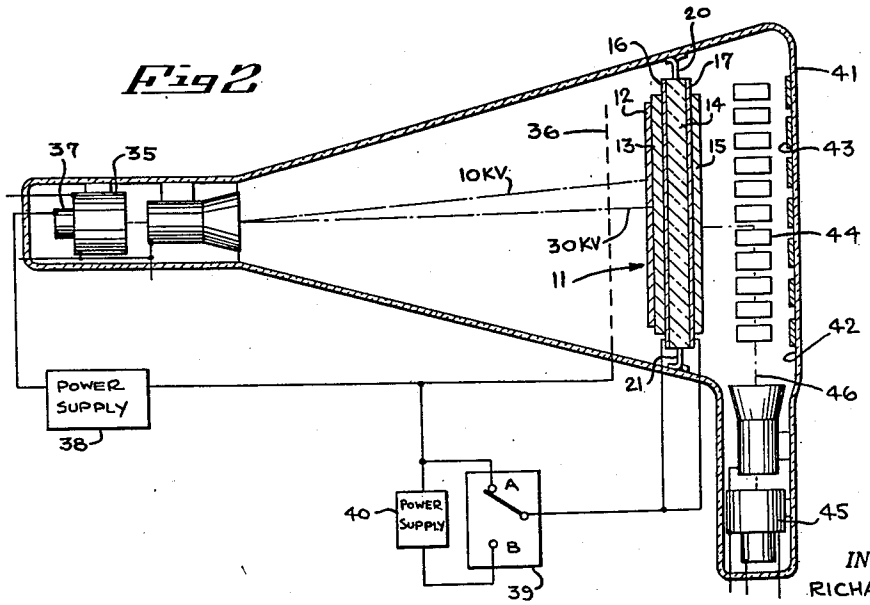

INVENTOR:
RICHARD MADEY,

BY

Joseph F. Pallon

ATTORNEY

Jan. 3, 1961 R. MADEY 2,967,262

MULTI-COLOR DISPLAY TUBE

Filed July 30, 1956 2 Sheets-Sheet 2

Fig 3

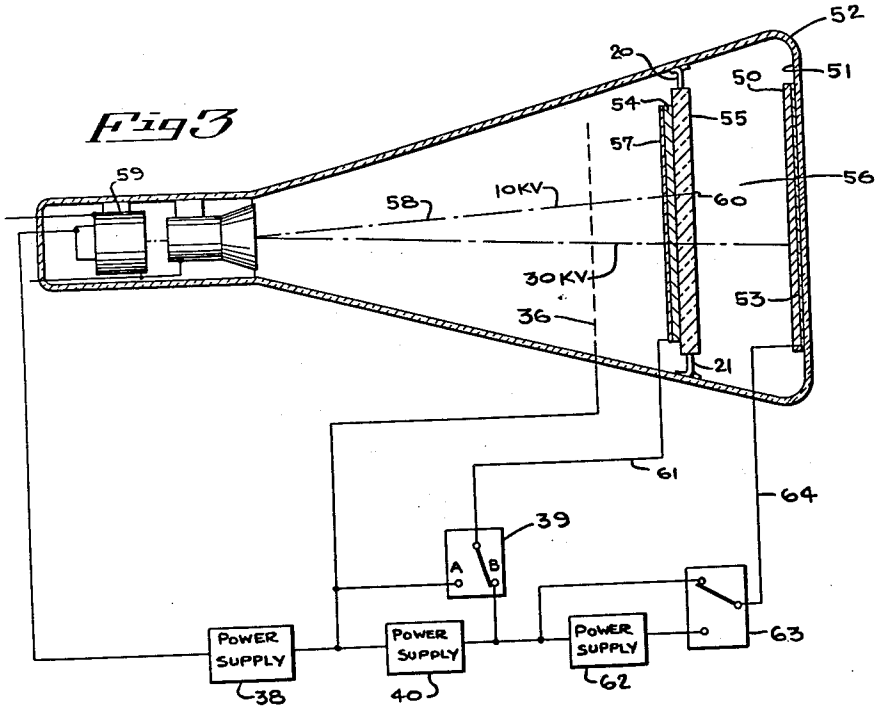

Fig 4

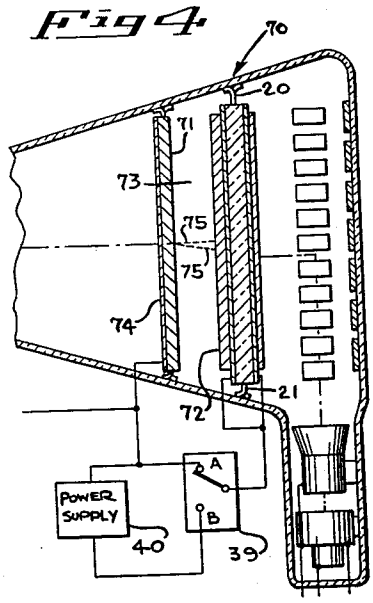

INVENTOR:
RICHARD MADEY,

BY Joseph J. Pallon

ATTORNEY

United States Patent Office

2,967,262

Patented Jan. 3, 1961

1

2,967,262

MULTI-COLOR DISPLAY TUBE

Richard Madey, Wigtel Lane, Bellport, N.Y.

Filed July 30, 1956, Ser. No. 600,958

6 Claims. (Cl. 315—12)

This invention relates to cathode ray vacuum tubes, and more particularly to improvements in cathode ray display, signal storage and switching tubes such as are used for the display of several independent variables, as in the picture tubes employed in tricolor television reception, and elsewhere.

Expedients heretofore employed successfully in the art to produce cathode ray tubes capable of responding to a plurality of primary colors have principally embodied a plurality of ray emitters, a screen regularly divided into small discrete areas of phosphors, each producing a desired primary color, and a masking device capable of shielding from each emitter all of those portions of the screen which are covered with phosphors other than that of the desired primary color associated with a particular emitter. Since good detail in the picture requires that each discrete area of primary color be very small, the production of such a screen is laborious and expensive, and the production and mounting of such a masking device in exact register therewith are even more difficult.

By means of the present invention, it is made possible to excite independently the phosphors of a plurality of substantially superimposed primary color screens by means of independent picture signals, without interaction between them, and without the necessity for employing precise and expensive color mosaic screens and shadow masks.

It is therefore an object of this invention to provide an electron tube having superposed unbroken fields for complex signal storage, with independent access to each field.

It is also an object of this invention to provide a cathode ray picture tube in which access to entire overlapping color fields is simply obtained by means of independent electron beams.

It is a further object of this invention to provide in such a tube, simple means for obtaining instantaneous access to any desired one of several such fields by means of a single electron beam of controlled characteristics.

Still another object of the instant invention is to provide a color picture tube of superior characteristics as above described, adapted for improved simplicity and economy of construction.

One further object is to provide a color picture tube by means of whose structure, simplication can be effected in the circuitry employed in its operation.

Another object of the invention is to provide an information storage device with plural storage reservoirs and compact means of access thereto.

J. L. Baird, in his British Patent No. 562,168, dated July 23, 1943, describes a two sided phosphor screen for two color reproduction. One color phosphor is on one side of a mica sheet and the second color phosphor is on the opposite side. Two electron guns are located at opposite sides of the screen. Furthermore, said British patent describes a non-planar surface for a three color picture tube.

With the above in view, it is an object of this invention to provide a three color picture reproducer utilizing both sides of a transparent flat planar screen.

2

It is another object of this invention to provide two color selection and picture reproduction on one side of a flat planar surface, in combination with a third color picture on the opposite side of a transparent flat planar screen.

An important advantage of the present invention lies in the fact that the third or final color phosphor in the case where it is desired to employ three phosphors, or the third and fourth phosphors when four are used, may be supported conveniently on the opposite side of a flat planar sheet of suitable transparent material, such as glass.

Another important advantage of the present invention lies in the fact that two color selection on one side of a transparent flat planar screen is simpler, more practical, and more economical than three color selection on the same side of a flat planar screen. In one example, C. S. Szegho, in U.S. Patent No. 2,431,088, dated November 18, 1947, suggested the use of a variable current density beam to produce different overall color responses from a single screen composed of a suitable mixture of fluorescent powders of different types. Saturation in two or three component phosphor screens makes color dependent upon current density. The invention described herein takes particular advantage of the fact that high chroma emission can be achieved by varying the current density much more easily for two widely separated colors than for three. In another example, C. S. Szegho, in U.S. Patent No. 2,455,710, dated December 1, 1948, suggested the use of a stratified phosphor screen, composed of three different phosphor layers deposited on the same side of a glass plate, wherein the color can be changed by differences in electron beam velocity. Such a phosphor screen has attractive features for tricolor television reception, but is not available in practical form because of problems associated with the proper excitation of three phosphor layers on the same side of a glass support. By means of the present invention, it is shown that proper excitation can be achieved practically for two phosphor layers on the same side of a glass supporting plate.

Therefore, it is another object of this invention to provide a tricolor television tube that can utilize differences in electron beam velocity for two color selection on one side of a transparent flat planar screen in combination with a third color on the opposite side of a transparent flat planar screen.

Another object of this invention is to provide a tricolor television tube that can utilize differences in electron beam current density for two color selection on one side of a transparent flat planar screen in combination with a third color on the opposite side of a transparent flat planar screen.

Still another object of this invention is to provide a tricolor television or display tube having a two layer phosphor screen; two color selection thereof being accomplished in the first phosphor layer by means of differences in electron beam current density and the third color selection in the second phosphor layer being accomplished by means of a beam of high velocity which can penetrate into the second layer.

Still another object of this invention is to provide a tricolor display tube that can utilize any other presently known two color selection techniques either alone or in combination, on one side of a flat planar screen in combination with a third color on the opposite side of a flat planar screen.

Still another object of this invention is to provide a tricolor display tube that can utilize any other two color selection techniques now known to the art either alone or in combination on one side of a screen in combination

with a third color on the opposite side of a flat planar screen.

If a two sided tricolor planar screen in a tube is viewed from the side that supports only a single phosphor for the third color, then the exciting electron gun for that color may be located at an angle as in the Baird tube referred to hereinabove to permit viewing. In this case, it will be necessary to apply a so-called "keystone" correction to the picture. Such "keystone" correction techniques are well known to those skilled in the art. One of the disadvantages of having an exciting electron beam incident at an angle is that the tube envelope would be somewhat bulky and cumbersome. This disadvantage is overcome according to the present invention by utilizing one of the "flat tube" techniques for exciting the third color, such as those mentioned in Electronics 28, 7 (February 1955) and Electronics 29, 12 (May 1956). Such tubes are currently manufactured, and provide a convenient means of simplifying the construction of the assembly when the composite phosphor screen support is spaced from the inward face of the picture tube itself by a short distance suitable for providing acceleration to the electron beam which is employed to excite the phosphor on the viewing side of the screen. In the case of the flat tube described in Electronics 28, 7 (February 1955), a monochrome rectangular display is produced by directing the exciting electron beam in the following manner. The beam is first directed along one edge of the display area in a field-free region bounded by a row of deflection plates. Then the beam is bent through a large angle by a control voltage applied to a selected deflection plate. The beam now moves parallel to the plane of the phosphor screen until it is finally bent into the screen by a second set of deflection plates. The second set of deflection plates may consist of a series of transparent conductive coatings on a glass plate which is parallel to the phosphor screen.

Hence, another object of this invention is to provide a tri-color television tube that utilizes two color selection on one side of a flat planar screen in combination with a third color picture produced on the opposite side of the flat planar screen by means of any per se or in combination, of the above mentioned flat tube techniques or any, per se or in combination, other flat tube techniques.

A still further object of the present invention is to provide an information storage tube or color display tube that utilizes the principle of secondary emission either by transmission or reflection.

A clearer understanding of the nature of the invention may be obtained by reference to the appended drawings, wherein:

Fig. 1 is a diagrammatic view of a cathode ray tube constructed in accordance with the instant invention;

Fig. 2 is a diagrammatic view of a modification of Fig. 1 and showing means for obtaining two different electron beam energies;

Fig. 3 is illustrative of another embodiment of Figs. 1 and 2 including the use of transmission secondary emission; and

Fig. 4 is a fragmental view and further modification of Fig. 3.

Referring now to the drawings, there is seen in Fig. 1 a cathode ray tube **10** wherein is located a composite viewing screen **11** constructed according to the present invention. Said viewing screen contains a first thin layer of luminescent phosphor **12** having its emission spectrum relatively sharply peaked at one wave length, which phosphor **12** is superimposed on a second thick layer **13** of another luminescent phosphor having an emission spectrum relatively sharply peaked at another different wave length. Both of the said phosphor layers are deposited on one side of a sheet **14** of glass or other suitable material which is transparent to the emitted wave lengths. The third distinct layer of luminescent phosphor **15** having an emission spectrum relatively sharply peaked

at still a third wave length, is deposited on the remote or viewing side of sheet **14**. It is to be noted that the sheet **14** is electrically coated on both faces with a transparent conductive material **16** and **17**, respectively, which material is in electrical connection with conductors **18** and **19**, respectively, extending through tube **10**. Said screen furthermore is mounted in any suitable manner inside said tube **10** such as by means of extensions **20** and **21**, respectively, contacting the interior of said tube **10**.

By way of example, phosphor layer **12** may consist of red fluorescing zinc cadmium sulphide, Zn—CdS; phosphor layer **13** may consist of green fluorescing zinc sulphide activated with copper, ZnS:Cu; and phosphor layer **15** may consist of blue fluorescing zinc sulphide activated with silver, ZnS:Ag. Such materials are known to the art, as indicated in the Burton Patent 2,580,073; however, the present invention is not limited to the use of these specific materials.

In the neck portion **22** of said tube **10** there are mounted a pair of electron guns **23** and **24**. In addition there are also provided deflection means **25** and **26**, respectively, which may be external or internal to said tube **10**.

An electron beam **27** from one of the guns, such as **23**, passes through the deflector **25** and depending on its velocity may penetrate into screen **12** or through screen **12** into screen **13**. Similarly, an electron beam **28** from gun **24** passes through deflector **26** to penetrate into screen **12** or through screen **12** into screen **13**. It is to be noted that there may be a common rather than a separate deflector for said two beams.

Phosphor layer **15** is excited by an electron beam **29** emanating from an electron gun **30**. Said beam can be made to scan phosphor **15** in any suitable manner by means of deflector **31** and associated circuits. Said gun **30** is, as shown, located at an angle to permit viewing of the resultant picture on the screen.

The theory of operation of this form of the invention, as shown in Fig. 1, is better understood after a brief review of the experimental and theoretical results on the passage of electrons through matter for electron energies below which radiative losses are negligible in comparison with ionization losses. The following facts are well established.

(1) The penetration or practical range of an electron in a given material is a non-linear function of the electron velocity.

(2) For a given electron velocity, the ionization loss or mass stopping power is nearly independent of the nature of the absorbing material. As a practical consequence, the electron penetration or practical range, measured in units of milligrams per cm.^{2}, is substantially the same function of velocity for different materials.

An excellent review of electron range-energy work has been given by Katz and Penfold, Rev. Mod. Phys. 24, 28 (1952). These authors represent the available experimental data with the following empirical relationship, where the incident electron kinetic energy T is in m.e.v. For energies from 10 k.e.v. to about 3 m.e.v.,

$$R(\text{mg./cm.}^2)=412T^n \qquad \text{(I}a\text{)}$$

with

$$n=1.265-0.0954\ 1nT \qquad \text{(I}b\text{)}$$

where R is the extrapolated or practical range for originally monoenergetic electrons of kinetic energy T.

(3) The electron energy loss and hence the luminescence emission of phosphors are also non-linear functions of the electron velocity. Both the electron energy loss and the luminescence efficiency of the excited phosphor are greatest near the end of the range.

Although the exact calculation of energy transfers by quantum-mechanical methods is a complex problem, which has been excellently treated in an article by H. A. Bethe in the Handbuch der Physik, Julius Springer, Berlin, 24, 273 (1933), there is a relatively simple semi-empirical

equation which permits the estimation of the energy lost by an electron beam in passing through a thin absorbing layer. This is the Thomson-Whiddington law, which may be written:

$$V_0^2 - V^2 = \alpha \frac{\rho Z X}{A} \qquad \text{(II)}$$

where V_0 is the initial beam potential, V is the probable beam potential after transmission through the thin layer, and α is an empirical constant. The thin absorbing layer traversed is of density ρ, atomic number Z, atomic weight A, and thickness X. The factor $\rho ZX/A$ will be recognized as proportional to the number of electrons per square centimeter of the absorbing layer. The constant α shows slight dependence on atomic number, being about four times as large for platinum (Z=78) as for aluminum (Z=13). For aluminum α is between 4×10^{11} and 8×10^{11} for V_0 in the range 6,000 to 60,000 volts. The voltage V has a meaning only in a statistical sense since the energy distribution of transmitted electrons will be complex and a large fraction of electrons passing through the thin absorbing layer will not suffer appreciable energy losses at all. If $V_0 - V = \Delta V$ is small compared with V_0, as it will be if the thickness of the absorbing layer is small compared to the practical range of the incident electron beam, then e.g. (II) may be written, approximately

$$\frac{\Delta V}{V_0} = \frac{\alpha \rho Z}{2AV_0^2} X \qquad \text{(III)}$$

The fractional loss in energy is proportional both to the number of electrons per square centimeter and to the thickness of the thin absorbing layer, and inversely proportional to the square of the beam potential.

It will be seen from the above discussion that the two phosphor layers **12** and **13** can be separately excited by electron beams **27** and **28** of different velocities or kinetic energies.

It will also be seen that the thicknesses of the two phosphor layers **12** and **13** will be approximately equal to or slightly larger than the electron ranges corresponding to the two beam energies employed. Furthermore, if the thickness of the first phosphor layer **12** is small compared to the range of the higher energy beam, then the energy given up by this higher energy beam to the first phosphor layer **12** will be a very small fraction of the total beam energy. Hence the higher energy beam can be made to excite the second phosphor layer **13** with a high luminescence efficiency without exciting appreciable luminescence in the first phosphor layer **12** through which it must pass. This latter point is further illustrated in the following table:

Energy Range		Specific Energy Loss, dT/dx (kev./mg. cm.$^{-2}$)	Energy Lost in first 0.20 mg./cm.^{2} Layer ΔT (kev.)	Fractional energy lost in first 0.20 mg./cm.^{2} layer (percent)
T (kev.)	R (mg./cm.^{2})			
10	0.19	--------	10	100
20	0.81	13.6	2.72	13.6
30	1.65	9.8	1.96	6.5
40	2.30	7.8	1.56	3.9
50	4.10	6.7	1.34	2.7

Hence, if a 10 kilovolt beam excited a first, 0.20 mg./cm.^{2} thick, phosphor layer **12** to luminescence, and if a 30 kilovolt beam excites a second, about 1.5 mg./cm.^{2} thick phosphor layer **13** to luminescence, then only about 2 kilovolts is given up to the first phosphor layer **12** by the 30 kilovolt beam as it passes on through to dissipate the remaining 28 kilovolts in the second phosphor layer **13**. The specific values of electron beam energies and phosphor thicknesses which are given here and illustrated in the table, in the text and in the figures are by way of example only.

It is desirable, but not essential, that there be no overlap of the emission and absorption spectra of the phosphors selected for constructing the stratified screen **11**. Assuming that the luminous output of said composite screen as a whole is viewed through the glass wall **32**, some overlap of the emission and absorption spectra can be tolerated if the phosphor layers are arranged in the proper order. For example, a phosphor could be chosen for layer **12** which would absorb the radiation emitted by phosphor layer **13**. However, in this case, reversing the positions shown, of these two layers would not be desirable to a viewer.

Fig. 1 can also be used to illustrate the use of a two color selection principle based upon variations in current density as has been described earlier, assuming that phosphor layer **12** exhibits high chroma emission of two widely separated colors when it is excited by electron beams of different current densities. As described in the Leverenz Patent 2,774,003, such a two-color phosphor layer **12** may consist of hexagonal cadmium sulphide containing a (presumed) excess of cadmium (hex CdS:(Cd)) capable, selectively, of emitting red and green light. The current density variations required for separately exciting two colors are obtained either by modulating the current density of an electron beam from a single gun or by using two guns as shown emitting electron beams of different and variable current densities. For tricolor television reception, the third color image can be excited either in phosphor layer **13** or **15** as previously described. If both layers **13** and **15** are excited with layer **12** a four color display results.

It is desirable, but not essential, to restrict the choice of phosphors to those capable of luminescent excitation by electrons and not by photons; otherwise the light emitted by any particular phosphor may excite a secondary luminescence in a phosphor constituting another layer. If the phosphors are susceptible to secondary excitation by photons, then the resultant color will be influenced by the emission spectra of the particular phosphors directly excited.

The two different electron beam energies required for separately exciting the two phosphor layers **12** and **13** in Fig. 1 can be obtained either (*a*) by using two guns with different cathode potentials, or (*b*) by using a single gun in which the cathode potential is varied to change the electron velocity, or (*c*) by varying the potential of the screen with respect to the potential of an electrode near the screen as shown in Fig. 2. In methods (*a*) and (*b*), it is necessary to alter the sensitivity of the deflecting system to compensate for the changing stiffness of the beam. Techniques for maintaining constant deflection sensitivity are well known to those skilled in the art. Method (*c*), proposed here and illustrated in Fig. 2, employs a single electron gun **35**, held at a fixed cathode potential, and an electrode **36** which is located near the composite screen **11** and which is also held at a fixed potential. The potential difference between said electrode **36** and said cathode **37** of the electron gun **35** is always kept at a constant value, such as 10 kilovolts, by the power supply **38** with its connecting conductors.

The potential of the conductor coatings **16** and **17** at the screen **11** can be switched to the same value as the electrode **36** or to some higher value. The switching device **39** can put the screen potential, for example, at an additional 20 kilovolts above the potential of the electrode **36**, by switching in power supply **40** with its connecting conductors. Hence, with the switching device **39** in position A, a 10 kilovolt beam, for example, will strike the screen **11** and excite only the color characteristic of the first phosphor layer **12**. With the switching device **39** in position B, a 30 kilovolt beam, for example, will strike said screen and excite the color characteristic of second phosphor layer **13**. In this way, both the deflection sensitivity and the image size are maintained constant.

In addition to functioning as an electrostatic shield which prevents the potential lines that are produced by changing the screen potential from affecting the beam deflection in the tube, the electrode **36**, which may be in the form of a fine wire grid, can also function as a post deflection accelerator electrode, if so desired.

It is to be noted that front phosphor **15** may be excited in the same manner as shown in Fig. 1. However, it is also possible to excite said phosphor **15** by the use of a flat tube technique as shown. The forward part **41** has a relatively flat inner face **42** substantially parallel with screen **11**, which face is provided with one or a plurality of transparent conducting deflecting elements **43** which are in electrical connection with external deflecting means, not shown. Within said tube and on the viewing side of screen **11**, is disposed one or a plurality of deflecting means **44** arranged approximately mutually perpendicular to deflecting means **43**. There is also mounted in said forward part of the tube as shown an electron gun **45**, adapted to shoot a beam **46** directed substantially parallel to one edge of the display area of screen **15** in a field free region bounded by the deflecting means **44**. Elements not shown are mounted in the tube in any suitable manner, to provide additional bending and focussing control of the beam **46**.

In operation, beam **46** is emitted from gun **45** and bent at any desired point through a large angle by a control signal voltage, not shown, applied to the deflecting means **44**. The beam **46** now moves parallel to the phosphor screen **15** until it is bent into the screen at any desired point by means of another control signal voltage, not shown, applied to deflecting means **43**. In this manner a TV raster or other displays can be scanned.

In addition thereto, the present invention contemplates the use of electrons of secondary emission from a first phosphor screen acting as a dynode, to excite to luminescence a second phosphor screen in proximity thereto and maintained at a higher potential than the first, during the period when operation of the second screen is desired.

Another embodiment of this invention is illustrated in Fig. 3. Phosphor layer **50** is mounted on the inward glass face **51** of the cathode ray tube **52**, which face has first been electrically coated with a transparent conducting layer **53**. The double phosphor layers **54** and **55**, respectively, are separated from the phosphor layer **50** by a small space **56** and are mounted on an electron permeable conducting support **57** which may be either a fine wire mesh or a thin metal foil construction. Said support **57** is located on the side of double phosphor layer **54**, **55** that faces the exciting electron beam **58** emanating from gun **59**.

By way of example, the transparent conducting layer **53** may be made of conductive tin oxide (SnO); phosphor layer **50** can be hexagonal zinc oxide (ZnO) which normally emits a green light; phosphor layer **55** may be hexagonal cadmium sulphide (CdS) capable of emitting red light and also capable of yielding secondary emission electrons, phosphor layer **54** may be a blue-emitting phosphor such as silver-activated hexagonal zinc sulphide (ZnS:Ag). Such materials are known to the art, as indicated in the Leverenz Patent 2,774,003; however, the invention is not limited to the use of these specific materials but may incorporate other materials known to the art.

It is to be noted that electrode **36**, power supplies **38** and **40** and switching device **39** with their associated electrical connectors are the same as shown in Fig. 2, excepting for conductor **61** between electron permeable conducting screen **57** and switching device **39**. In addition, power supply **62** may be switched by means of switching device **63** to conductor coating **53** via electrical conductor **64**.

The operation of the multicolor selection mechanism in phosphor layers **54** and **55** in this embodiment may be the same as those described above with respect to Figs. 1 and 2.

The beam **58** from the electron gun **59** excites the phosphor **55** to luminescence in accordance with a control signal not shown. The luminescent or photon image on phosphor **55** has a color characteristic of said phosphor. In addition to the aforementioned photon image, a secondary electron image **60** is produced on the far side of phosphor **55**. Transmission secondary electrons ejected from the far side of the phosphor layer **55**, opposite to the side first struck by the incident primary electron beam **58**, are in turn accelerated without loss of their spatial relations so as to strike phosphor **50** and reproduce the image in the color characteristic of that phosphor. The thickness of the phosphor layer **55** is chosen to prevent the fast primary electron beam **58** from penetrating all the way through said phosphor so as not to lose definition and contrast in the image created at phosphor **50**. Since most phosphors, in general, are reasonably good insulators, the transmission secondary electron yield can be significantly greater than unity. Most of the slow secondary electrons of energies less than 5 to 10 electron volts diffuse over very large distances in insulators and can escape from depths hundreds of times greater in insulators than in metals. In metals, secondary electrons are typically absorbed in only a few atomic layers because they rapidly lose their energy in many successive inelastic collisions with valence or conduction electrons; whereas, in insulators most of the collisions are elastic ones, which involve only a few hundredths of an electron volt loss per collision. The reason is that a minimum energy of the order of 5 to 10 electron volts is required for an inelastic collision with a valence electron of an insulator.

In this embodiment, the transmission secondary electron image **60** from the phosphor **55** can be converted or not to an optical image on phosphor **50**, in accordance with a control signal, not shown, by modulating the potential of the transparent conductive backing **53** of the phosphor **50** with respect to the potential of the conductive backing **57** of the phosphor **54**—**55**. Different degrees of voltage modulation can produce other desirable effects, such as brightness modulation of the converted optical image on phosphor **50**.

Another embodiment of the invention indicated above is illustrated in Fig. 4. Here the composite screen structure **70** is similar to that described above and illustrated in Fig. 1 with the modification herein that the first thin phosphor layer **71** is separated from a second, thicker phosphor layer **72** by a small space **73**. Phosphor **71** is mounted on an electron permeable conducting support **74** which may be either a fine wire mesh of large open area or a thin metal foil. Said support **74** is located on the side of phosphor **71** facing the exciting electron gun not shown.

Said embodiment shown in Fig. 4 may be used in tube **10** of Fig. 2 in lieu of the composite screen structure **11**. However, the power supplies and switching devices as described with reference to Fig. 3 may be used in this embodiment.

A transmission secondary electron image **75** from phosphor **71** is converted to an optical image at phosphor **72**, in a color characteristic of said phosphor, in the same manner as that described above for the phosphor layers **55** and **50** in Fig. 3.

Circuit techniques for decoding the National Television Systems Committee color signal to produce three simultaneous color signals, suitable for a three-gun display, are well known to those skilled in the art. This invention contemplates the use of circuit techniques for directly processing the National Television Systems Committee signal at the color receiver to form signals appropriate to the various display tubes described herein. It is clear from the previous descriptions that an associated color television receiver will employ sequential

color displays for some embodiments of this invention, simultaneous color displays for other embodiments, and a combination of sequential and simultaneous color displays for still other embodiments.

In the description and claims, power density of an electron beam means the rate of flow of beam energy per unit area and is defined by the following formula:

$$\text{Power density}=\frac{d(W/A)}{dt}=\frac{d(QV/A)}{dt}$$

wherein

W=beam energy
A=cross-sectional area of the beam
V=beam voltage or potential difference through which the beam electrons have fallen
Q=total charge in beam

$$I=\frac{dQ}{dt}=\text{beam current}$$

From the above, it will be noted that variable power density beams include variable velocity and variable current density beams.

In the description and claims it will be noted the terms flat planar or planar used in connection with the phosphor screen surfaces are to include curved surfaces which will not however be sufficient to cause visual distortion. Furthermore, the term flat tube techniques is to be considered synonymous with thin tube techniques without implying restriction to flat surfaces.

Although this invention has been described in terms of a specific illustrative example thereof, it is to be understood that to those skilled in the art various modifications and expedients will occur which do not, however, depart from the spirit of the invention disclosed. It is therefore intended that the instant invention will be subject only to the limitations of the appended claims.

I claim:

1. In an electron-beam operated cathode ray tube for polychrome rendition, at least one electron beam source, first planar screen means excitable to luminescence in one color at one value of beam power density, second optically transparent planar screen means in proximity thereto and excitable at another value of beam power density to produce both a luminescent image in a second color and a secondary emission of electrons in an image configuration corresponding to said luminescent image of second color, means to attract said secondary emission electrons, and third optically transparent planar screen means excitable to luminescence in a third color by said secondary emission electrons, said first, second and third screens being spaced forwardly of said electron beam source in the order named.

2. A cathode ray tube for colored image presentation comprising evacuated envelope means having a relatively flat face, an optically transparent phosphor screen on said face and adapted to be rendered luminescent in one primary color by electrons of secondary emission, an electron permeable support spaced rearwardly of said phosphor screen, two superposed phosphor layers on said support excitable in second and third primary colors respectively by electron beam impingement, the phosphor layer proximate to said screen being optically transparent, means for producing secondary emission electrons from the layer proximate to said screen to thereby render said screen luminescent, and at least one electron gun means mounted for scanning said layers.

3. In a cathode ray tube, a pair of spaced phosphor screens which have different spectral emission maxima and of which the second of said pair of screens is optically transparent, an electron permeable support mounting the first of said screens rearwardly of said second screen, an optically transparent support mounting on the rearward side thereof said second screen, transparent conductor means for each of said screens, circuit means for said conductor means, switching means for said circuit means to modulate the potential of one of the conductor means relative to the other, at least one electron gun disposed rearwardly of said first screen for exciting said first screen, means for varying the power density of the beam emanating from said gun, and deflection and scanning means for said beam, said first screen having a thickness equal to the range of the electron beam from said gun to permit both the excitation by said beam of a luminescent image on said first screen and the development by said beam of a secondary electron image which corresponds in configuration to said luminescent image and which is adapted to be transmitted from said first screen to said second screen when said switching means is operated to impress upon the conductor means for said second screen a positive potential relative to the conductor means for said first screen, and said second phosphor screen being excitable into luminescence by the secondary electron image which is transmitted upon operation of said switching means.

4. A cathode ray tube according to claim 3, including a third optically transparent phosphor screen having spectral emission maxima different from said first and second screens, said third screen being mounted on the side of said optically transparent support away from said beam, transparent conductor means electrically connecting said third screen with said circuit means, means for producing at least one other electron beam, said last named means being mounted for luminescent excitation of said third screen, and means for varying the power density of said other beam and for scanning and deflecting said other beam.

5. A cathode ray tube according to claim 3, including a third phosphor screen having a spectral emission maxima different from said first and second screens, said third screen being superposed with said first screen on the side of said first screen away from said second screen, an electrode spaced rearwardly of said electron permeable support, additional circuit means electrically connected with said electrode and with the composite screen formed of said first and second screens, and switching means in said additional circuit means for varying the potential of said composite screen with respect to said electrode.

6. A cathode ray tube according to claim 5 wherein said third screen is composed of a mixture of fluorescent powders so that at least two different colors are produced upon excitation of said third screen by a variable power density electron beam.

References Cited in the file of this patent

UNITED STATES PATENTS

2,402,761	Leverenz	June 25, 1946
2,403,227	Leverenz	July 2, 1946
2,449,558	Lanier et al.	Sept. 21, 1948
2,461,515	Bronwell	Feb. 15, 1949
2,580,073	Burton	Dec. 25, 1951
2,590,018	Koller et al.	Mar. 18, 1952
2,728,025	Weimer	Dec. 20, 1955
2,730,653	Schagen	Jan. 10, 1956
2,774,003	Leverenz	Dec. 11, 1956
2,795,731	Aiken	June 11, 1957

FOREIGN PATENTS

562,168	Great Britain	June 21, 1944
582,892	Great Britain	Dec. 2, 1946